nRF54LS05 DK Hardware

v0.7.0

User Guide

4561_025 / 2026-10-01

NORDIC® SEMICONDUCTOR

Contents

Revision history . . . iii

Environmental and safety notices . . . iv

1 Introduction . . . 5

2 Hardware description . . . 6

2.1 Block diagram . . . 7
2.2 Power supply . . . 8
2.2.1 Power the nRF54LS05B SoC from an external source . . . 8
2.2.2 Power the whole nRF54LS05 DK from an external source . . . 8
2.3 GPIO interface . . . 9
2.4 Buttons and LEDs . . . 12
2.5 32.768 kHz crystal . . . 13
2.6 Solder bridge configuration . . . 14
2.7 Board control . . . 15

3 Program and debug . . . 16

3.1 Debugger . . . 16
3.1.1 RESET button . . . 16
3.1.2 Virtual serial ports . . . 16
3.1.3 Dynamic hardware flow control . . . 17
3.2 Debug In . . . 18
3.3 Debug Out for programming external boards . . . 19

4 Measurements . . . 22

4.1 Current measurements . . . 22
4.1.1 Set up the DK . . . 22
4.1.2 Measure current profile with an oscilloscope . . . 22
4.1.3 Measure average current with an ampere meter . . . 23
4.2 RF measurements . . . 24

Glossary . . . 26

Recommended reading . . . 28

Legal notices . . . 29

Revision history

Date	Description
October 2026	First release

Environmental and safety notices

Power supply

The nRF54LS05 DK must be powered by a PS1 class (IEC 62368-1) power supply with maximum power less than 15 W.

Skilled persons

The nRF54LS05 DK is intended for use only by skilled persons.

A skilled person is someone with relevant education or experience that enables them to identify potential hazards and takes appropriate action to reduce the risk of injury to themselves and others.



Hot surface

In the event of a fault, touchable surfaces can heat up significantly.



Operating temperature

The nRF54LS05 DK is designed to operate in room temperature environments from 0°C to +40°C.

Electrostatic discharge

The nRF54LS05 DK is susceptible to *Electrostatic Discharge (ESD)*.

To avoid damage to your device, it should be used in an electrostatic free environment, such as a laboratory.





Environmental Protection

Waste electrical products should not be disposed of with household waste.

Please recycle where facilities exist. Check with your local authority or retailer for recycling advice.

1 Introduction

The nRF54LS05 DK is a hardware development platform used to design and develop application firmware on the nRF54LS05B SoC.

Key features

- nRF54LS05B SoC in QFN48 package
- Support for the following wireless protocols:
  - *Bluetooth*® Low Energy
  - 2.4 GHz proprietary
- 2.4 GHz *Printed Circuit Board (PCB)* antenna
- *Microwave coaxial connector with switch (SWF)* RF connector for direct RF measurements
- Four user-programmable LEDs
- Four user-programmable buttons
- SEGGER J-Link *Onboard (OB)* programmer/debugger with *Universal Serial Bus (USB)* interface
- Two *Universal Asynchronous Receiver/Transmitter (UART)* interfaces through virtual serial ports
- Pins for measuring power consumption of the nRF54LS05B SoC
- nPM1300 *Power Management Integrated Circuit (PMIC)* providing a 1.8 V to 3.3 V user-programmable power supply from USB

Kit content

The nRF54LS05 DK includes hardware, preprogrammed firmware, documentation, hardware schematics, and layout files.

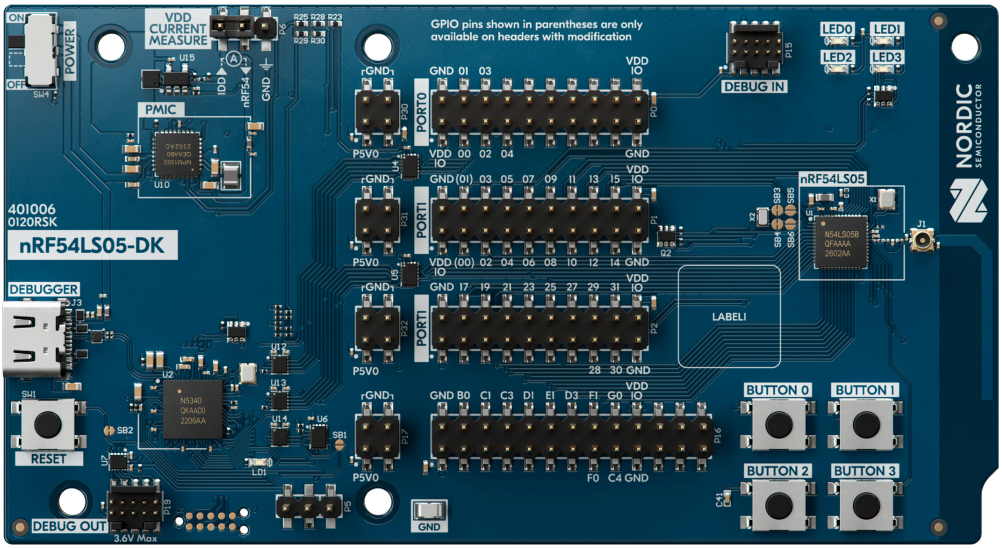

Figure 1: nRF54LS05 DK kit content

The hardware design files for the nRF54LS05 DK are available on the nRF54LS05 DK product page. They include the following resources:

- Schematics
- PCB layout files
- Bill of materials
- Gerber files

2 Hardware description

The main components of the nRF54LS05 DK include the nRF54LS05B SoC and hardware peripherals that add functionality and configuration options.

The following figures show the front and back of the nRF54LS05 DK.

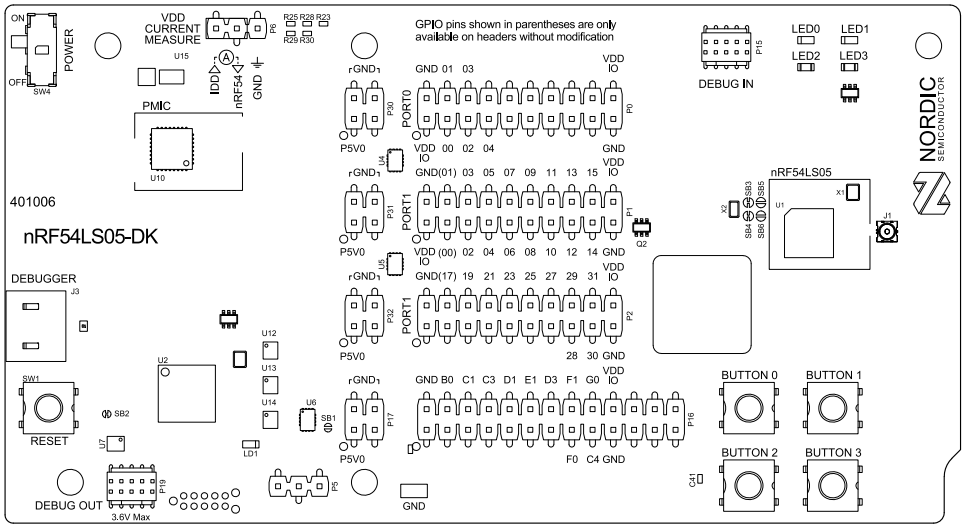

Figure 2: nRF54LS05 DK front view

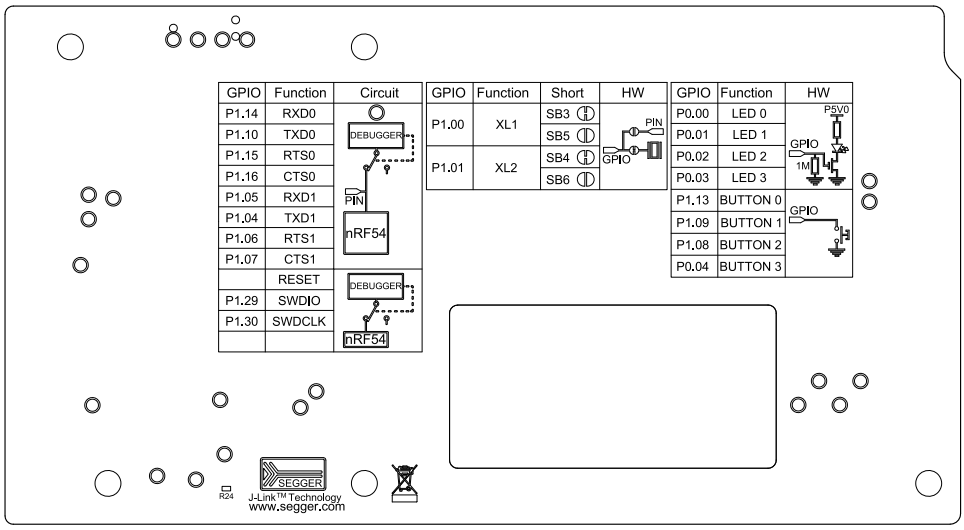

Figure 3: nRF54LS05 DK back view

The following figure shows the dimensions of the nRF54LS05 DK and the positions of the mounting holes in millimeters.

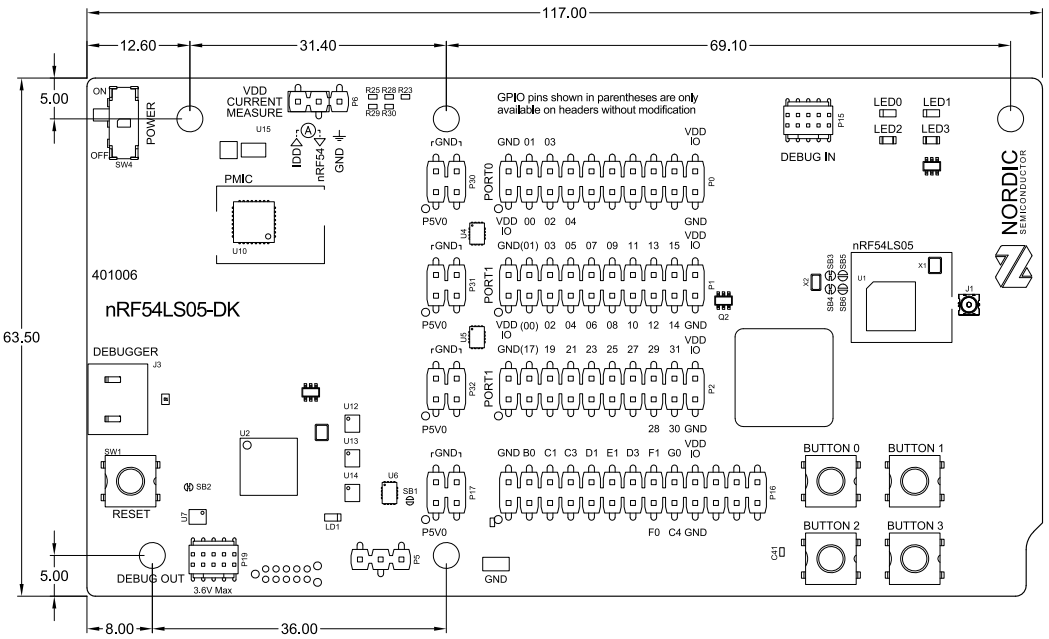

Figure 4: nRF54LS05 DK dimensions in millimeters

2.1 Block diagram

The block diagram illustrates the functional architecture of the nRF54LS05 DK.

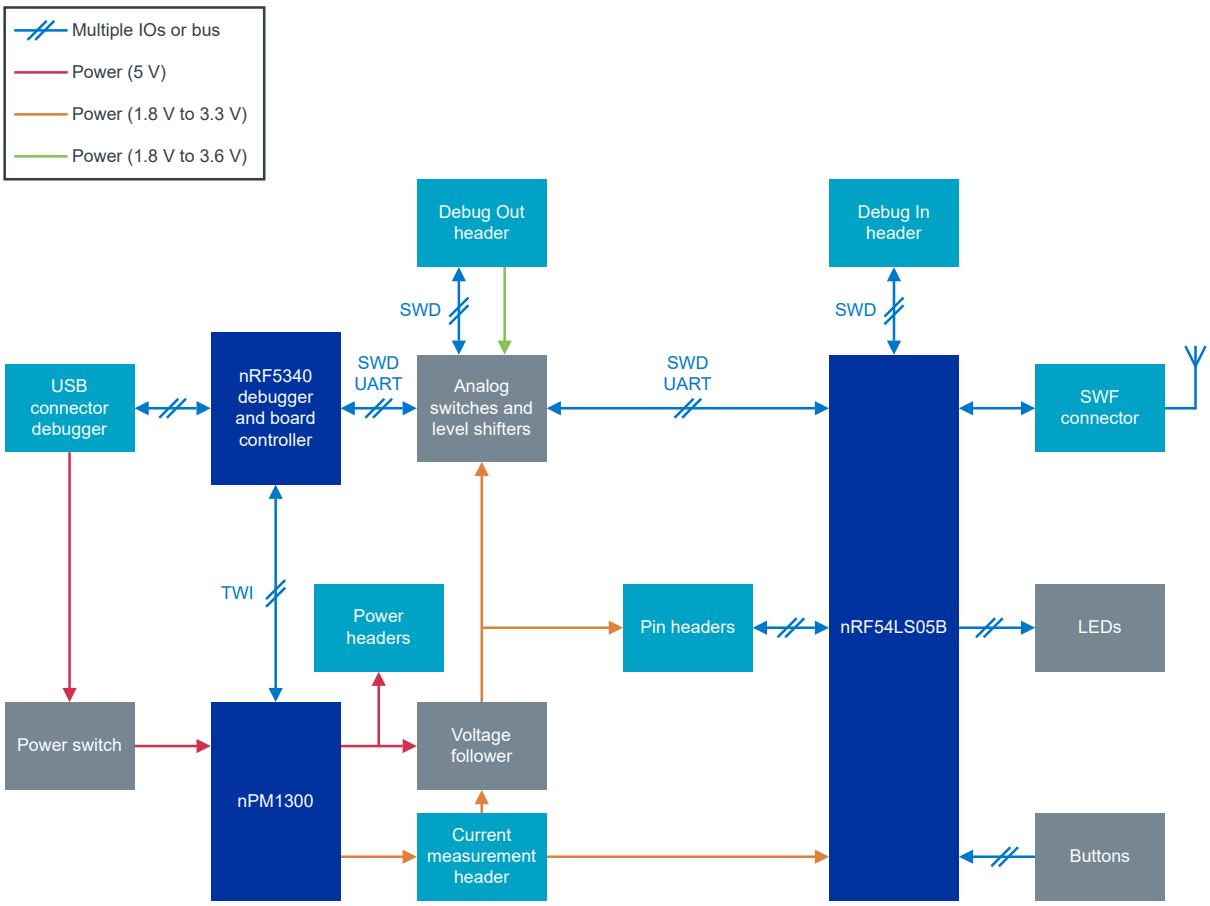

Figure 5: Block diagram

2.2 Power supply

The nRF54LS05 DK is fully powered by the 5 V supplied through *USB* connector **J3**.

The 5 V domain provides the main supply voltage (P5V0), which feeds the nPM1300 *PMIC*. The PMIC in turn supplies the nRF54LS05B SoC with two power domains: VDD:nRF and VDD:IO.

VDD:nRF has a default voltage of 1.8 V and is programmable from 1.8 V to 3.3 V. To change the VDD:nRF voltage, use the Board Configurator app in nRF Connect for Desktop. See Board Configurator app for more information.

VDD:IO is a buffered version of VDD:nRF that also supplies power to the debugger. The nRF54LS05 DK uses a voltage follower for VDD:IO to make sure that leakage currents are not drawn from the nRF54LS05B SoC device during low current measurements.

2.2.1 Power the nRF54LS05B SoC from an external source

The nRF54LS05B SoC can be powered directly from an external power source with the rest of the nRF54LS05 DK being powered through the **J3** *USB* connector. This enables external supply for the nRF54LS05B SoC while serial interfaces, LEDs, and buttons remain functional.

Header **P6** carries the VDD:nRF power domain and has a jumper fitted by default. Remove the jumper from **P6** and connect an external power source to it. The allowed voltage range is from 1.8 V to 3.6 V.

Ensure that the nRF54LS05 DK is powered through USB connector **J3** before powering on the nRF54LS05B SoC through the **P6** external supply header to avoid damaging the onboard circuitry.

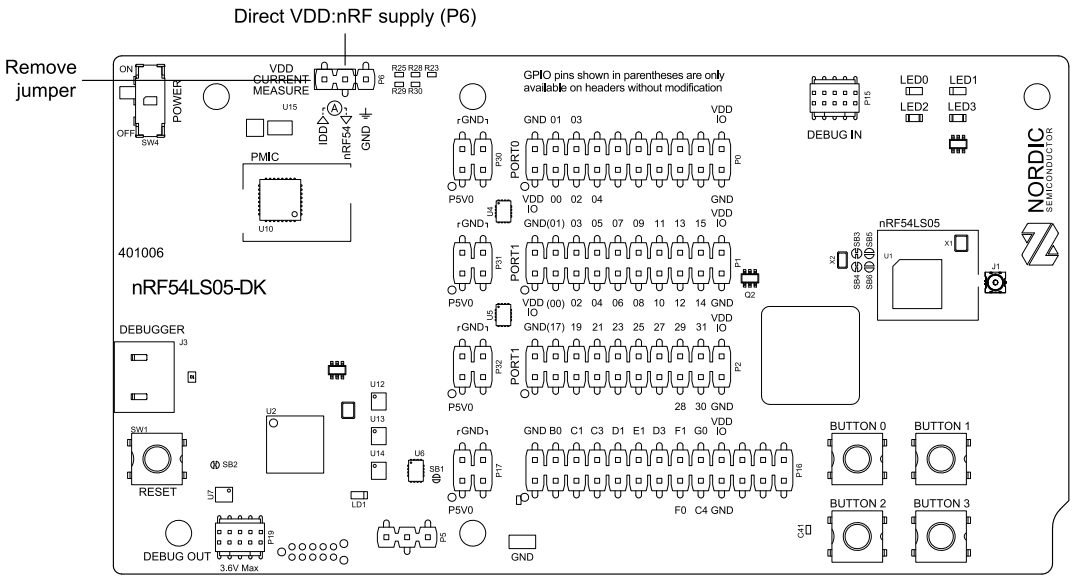

Figure 6: External VDD:nRF supply

2.2.2 Power the whole nRF54LS05 DK from an external source

The nRF54LS05 DK can be manually configured to be supplied through the **P6** header without the need to supply power through the **J3** *USB* connector. In this configuration, the debugger, virtual serial ports, and LEDs are unavailable.

The analog switches on the nRF54LS05 DK must be reconfigured to disconnect the nRF54LS05B SoC from the onboard debugger. Move the 0 Ω 0402 resistors from **R25** and **R28** to **R29** and **R30**.

Header **P6** carries the VDD:nRF power domain and has a jumper fitted by default. Remove the jumper from **P6** and connect an external power source to it. The allowed voltage range is from 1.8 V to 3.6 V.

2.3 GPIO interface

Access the nRF54LS05B SoC *General-Purpose Input/Output (GPIO)* pins through headers **P0**, **P1**, and **P2**. Each GPIO pin header has a dedicated power header (**P30**, **P31**, and **P32**) that can supply P5V0 to any external device connected to the nRF54LS05 DK.

The expansion board header at **P16** supports the addition of future generic expansion boards for Nordic DKs. The GPIO pins in the expansion board header are available at headers **P0**, **P1**, and **P2** as well. The expansion board header has its own power supply header **P17**.

The header designators are independent of the nRF54LS05B SoC GPIO port numbering. Header **P0** carries the port 0 pins, while the port 1 pins are split across two headers: **P1** carries `P1.00` to `P1.15`, and **P2** carries `P1.16` to `P1.31`.

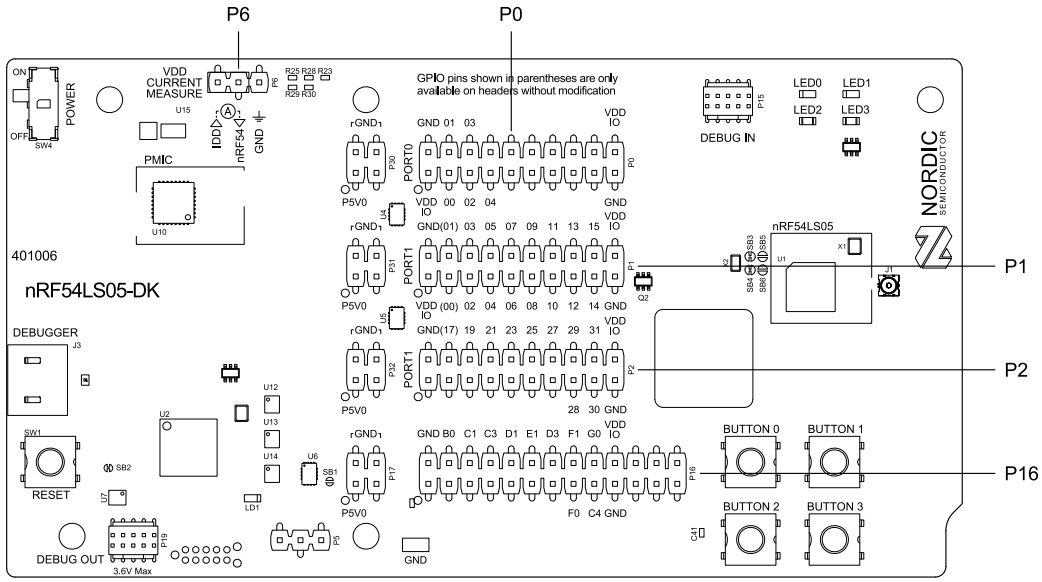

Figure 7: GPIO and power headers

Pin maps

GPIO pin	Function	Available on the expansion board header	Default connected to P0
`P0.00`	LED0	No	Yes
`P0.01`	LED1	No	Yes
`P0.02`	LED2	No	Yes
`P0.03`	LED3	No	Yes
`P0.04`	BUTTON 3	No	Yes

*Table 1: **P0** pin map*

GPIO pin	Function	Available on the expansion board header	Default connected to P1
P1.00	XL1	No	No. To connect to pin header **P1**, short **SB5** and cut **SB3**.
P1.01	XL2	No	No. To connect to pin header **P1**, short **SB6** and cut **SB4**.
P1.02	None	Yes	Yes
P1.03	None	Yes	Yes
P1.04	UART1_TXD	Yes	Yes
P1.05	UART1_RXD	Yes	Yes
P1.06	UART1_RTS	Yes	Yes
P1.07	UART1_CTS	Yes	Yes
P1.08	BUTTON 2	No	Yes
P1.09	BUTTON 1	No	Yes
P1.10	UART0_TXD	No	Yes
P1.11	None	Yes	Yes
P1.12	None	Yes	Yes
P1.13	BUTTON 0	No	Yes
P1.14	UART0_RXD	No	Yes
P1.15	UART0_RTS	No	Yes

*Table 2: **P1** pin map*

For the full solder bridge overview, including **SB3** to **SB6**, see Solder bridge configuration on page 14.

GPIO pin	Function	Available on the expansion board header	Default connected to P2
P1.16	UART0_CTS	No	Yes
P1.17	None	Yes	Yes
P1.18	None	No	Yes
P1.19	None	No	Yes
P1.20	None	Yes	Yes
P1.21	None	Yes	Yes
P1.22	None	Yes	Yes
P1.23	None	Yes	Yes
P1.24	None	No	Yes
P1.25	None	Yes	Yes
P1.26	None	Yes	Yes
P1.27	None	Yes	Yes
P1.28	None	No	Yes
P1.29	SWDIO	No	Yes
P1.30	SWDCLK	No	Yes
P1.31	None	No	Yes

*Table 3: **P2** pin map*

Headers **P17**, **P30**, **P31**, and **P32** are power supply pins that each provide P5V0 for shields connected to GPIO ports.

P17, P30, P31, and P32 signal	Function
1	P5V0 from *PMIC*
2	Ground
3	N.C.
4	Ground

*Table 4: **P17**, **P30**, **P31**, and **P32** signal map*

For the expansion board header pinout, see Figure 8: Expansion board header on page 12.

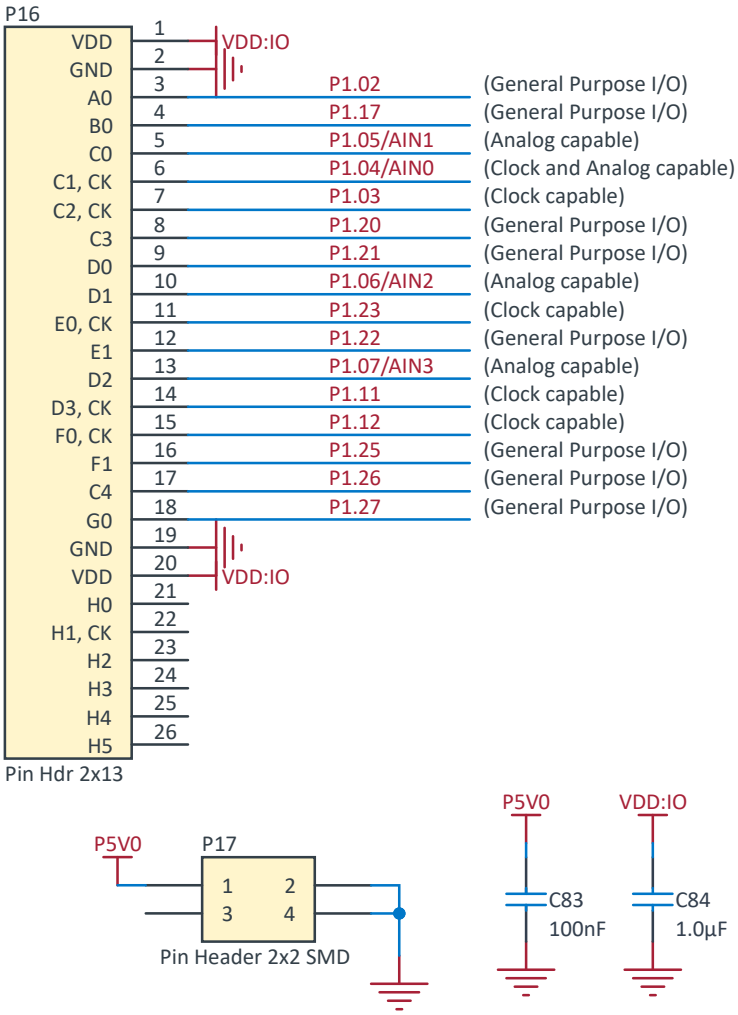

Figure 8: Expansion board header

2.4 Buttons and LEDs

The four buttons and four LEDs on the nRF54LS05 DK are connected to dedicated *GPIO*s on the nRF54LS05B SoC.

GPIO	Part
P1.13	BUTTON 0
P1.09	BUTTON 1
P1.08	BUTTON 2
P0.04	BUTTON 3
P0.00	LED0
P0.01	LED1
P0.02	LED2
P0.03	LED3

Table 5: Button and LED connections

The buttons are active low, which means that input is connected to ground when the button is pressed. The buttons do not have an external pull-up resistor. Pins **P1.13**, **P1.09**, **P1.08**, and **P0.04** must be configured as input with an internal pull-up resistor to register that a button is pressed.

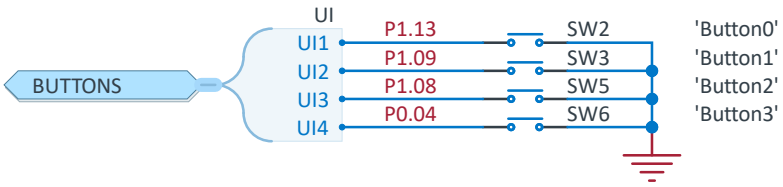

Figure 9: Button configuration

The LEDs are active high, which means that writing a logical `1` to the output pin turns on the LED. For the implementation, see Figure 10: LED configuration on page 13.

The LEDs are not directly connected to the nRF54LS05B SoC GPIOs but are buffered by a transistor. The transistor gate has a 1 MΩ resistor to ground.

The LEDs are powered by the nPM1300 *PMIC*. The power to the LEDs can be disabled using the Board Configurator app in nRF Connect for Desktop. See Board Configurator app for more information.

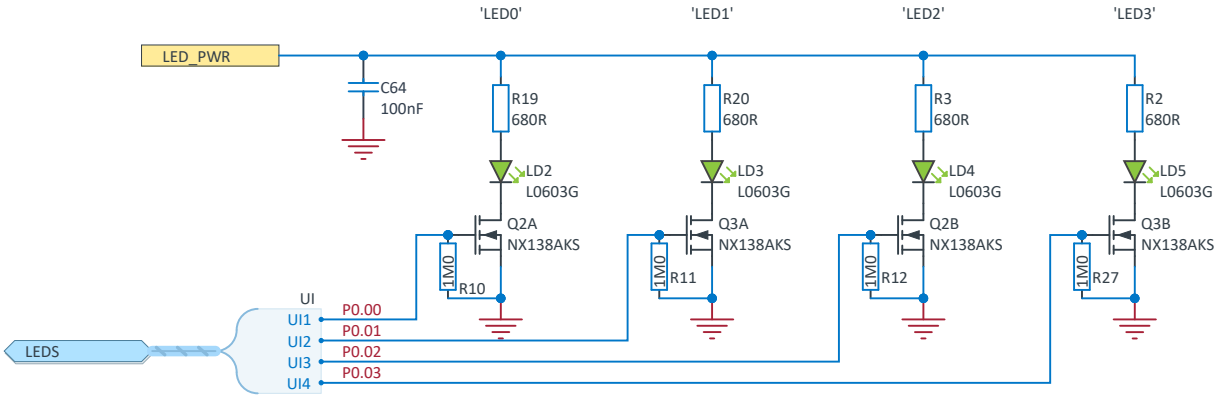

Figure 10: LED configuration

2.5 32.768 kHz crystal

The nRF54LS05B SoC can use the optional 32.768 kHz crystal **X2** for higher accuracy and lower average power consumption.

On the nRF54LS05 DK, **P1.00** and **P1.01** are used for the 32.768 kHz crystal by default and are not available as *GPIO* pins on the headers.

By cutting solder bridges **SB3** and **SB4** and shorting **SB5** and **SB6**, crystal **X2** is disconnected and GPIOs **P1.00** and **P1.01** are connected to the header for general use. See Solder bridge configuration on page 14 for the full solder bridge overview.

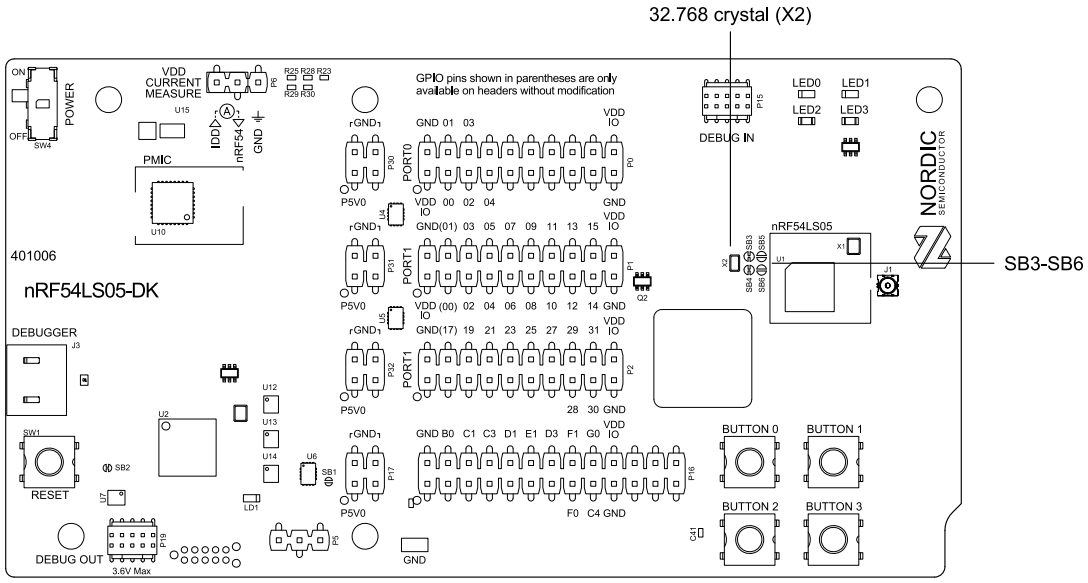

*Figure 11: Location of the 32.768 kHz crystal **X2** and **SB3** to **SB6***

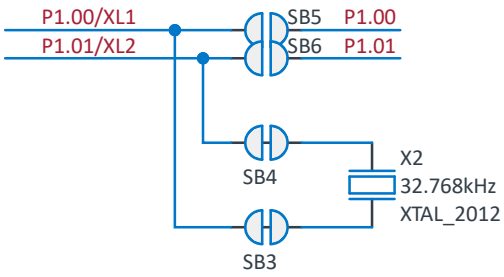

*Figure 12: Routing of **P1.00** and **P1.01** to the crystal or header*

2.6 Solder bridge configuration

The nRF54LS05 DK has a range of solder bridges for enabling or disabling functionality on the nRF54LS05 DK.

The following table is an overview of the solder bridges on the nRF54LS05 DK.

Solder bridge	Default	Function
SB1	Open	Short to connect the RESET button directly to the nRF54LS05B SoC.
SB2	Closed	Cut to disconnect the debugger reset from the RESET button.
SB3	Closed	Cut to disconnect the 32.768 kHz crystal from **P1.00**.
SB4	Closed	Cut to disconnect the 32.768 kHz crystal from **P1.01**.
SB5	Open	Short to connect **P1.00** to pin header **P1**.
SB6	Open	Short to connect **P1.01** to pin header **P1**.

Table 6: Solder bridge configuration

2.7 Board control

The debugger contains a board controller that controls the signals which enable and disable features on the nRF54LS05 DK.

All features on the nRF54LS05 DK have a default setting that is applied at the first boot. The configuration of the board controller can be changed through the Board Configurator app in nRF Connect for Desktop. If the configuration is modified from the default factory setting, the board controller loads the modified configuration every time the nRF54LS05 DK is restarted.

For more information, see Board Configurator app.

3 Program and debug

The debugger on the nRF54LS05 DK programs and debugs the nRF54LS05B SoC application firmware.

3.1 Debugger

The debugger on the nRF54LS05 DK runs SEGGER J-Link *OB* interface firmware. It connects through *USB* connector **J3**.

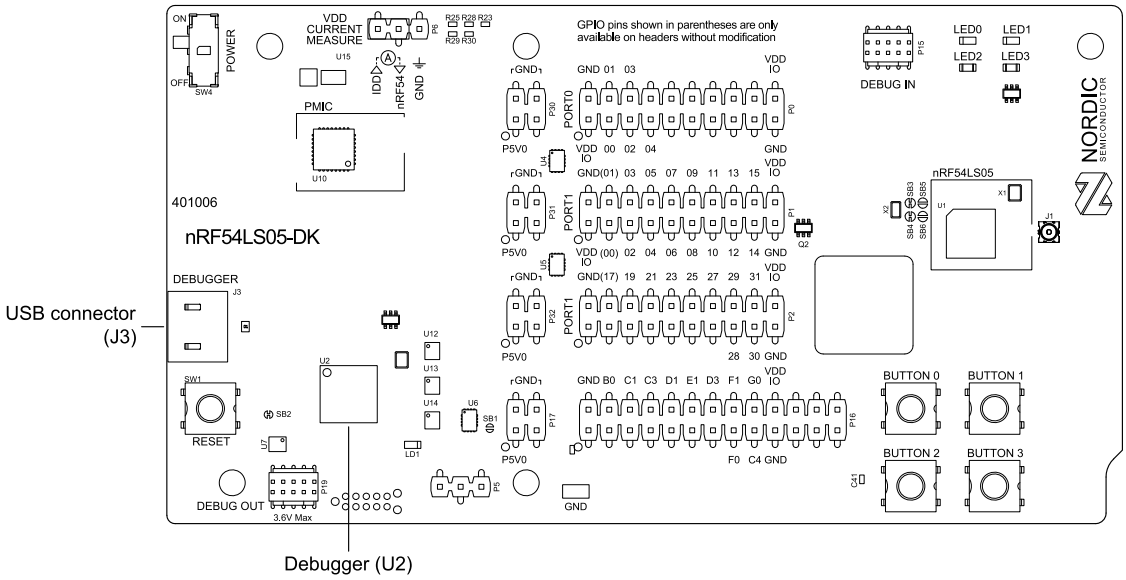

*Figure 13: Debugger and USB connector **J3***

3.1.1 RESET button

The nRF54LS05 DK is equipped with a RESET button **SW1** connected to the debugger. The debugger reads the status of the RESET_BUTTON signal and resets the nRF54LS05B SoC through the *Serial Wire Debug (SWD)*. Devices that are connected directly to the RESET_BUTTON signals through programming connectors are reset directly.



Figure 14: nRF54LS05 DK RESET button

By default, the RESET_BUTTON signal from **SW1** is routed to the debugger, which resets the nRF54LS05B SoC through the *SWD* and resets any device connected through the programming connectors.

Alternatively, the RESET button can be connected directly to the nRF54LS05B SoC to bypass the debugger by shorting the **SB1** solder bridge and cutting the **SB2** solder bridge. See Solder bridge configuration on page 14 for the full solder bridge overview.

3.1.2 Virtual serial ports

The debugger has two virtual serial ports. Each of them has a *UART* interface.

The serial ports have the following features:

- Flexible baud rate setting up to 1 Mbps. Baud rate 921,600 bps is not supported.
- Dynamic *Hardware Flow Control (HWFC)*

- Tri-stated UART lines when no terminal is connected

The following table lists the nRF54LS05B SoC UART *GPIO* pins and their signals.

Signal	nRF54LS05B SoC UART0	nRF54LS05B SoC UART1
Transmit Data (TXD)	`P1.10`	`P1.04`
Receive Data (RXD)	`P1.14`	`P1.05`
Request to Send (RTS)	`P1.15`	`P1.06`
Clear to Send (CTS)	`P1.16`	`P1.07`

Table 7: nRF54LS05B SoC GPIOs mapped to UART serial port signals

The UART pins connected to the debugger are tri-stated when no terminal is connected to the virtual serial port on the computer. The terminal software must send a *Data Terminal Ready (DTR)* signal to configure the UART debugger pins.

RTS pins `P1.15` and `P1.06` and CTS pins `P1.16` and `P1.07` can be used for other purposes when HWFC is disabled on the nRF54LS05B SoC.

The UART signals are routed to the debugger through analog switches **U4** and **U5**.

Serial port pins for other tasks

For each UART instance, the TXD and RXD signals can be disconnected from the debugger as a group. For the UARTs in use, the RTS and CTS signals can be connected and disconnected from the debugger as a group, depending on HWFC usage. This can be done through the Board Configurator app in nRF Connect for Desktop. See Board Configurator app for more information.

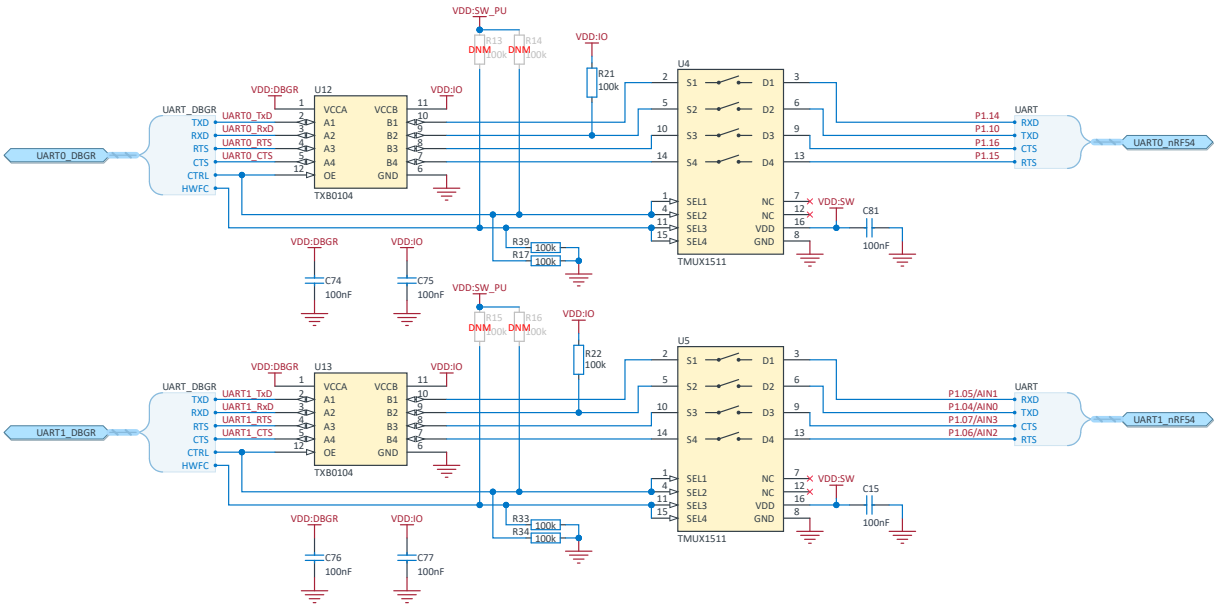

Figure 15: Analog switches between debugger and nRF54LS05B SoC

3.1.3 Dynamic hardware flow control

When the debugger receives a *DTR* signal from a terminal, it automatically performs *HWFC* detection.

Automatic HWFC detection is done by driving *CTS* from the debugger and evaluating the state of *RTS* when data is first sent or received. If the state of RTS is high, it is assumed that HWFC is not in use. If

HWFC is not detected, the CTS pins **P1.16** and **P1.07** and RTS pins **P1.15** and **P1.06** are free for the nRF54LS05B SoC application to use.

After a power-on reset of the debugger, all *UART* lines are tri-stated when no terminal is connected to the virtual serial port. If HWFC has been used and detected, the CTS pin **P1.16** or **P1.07** is driven by the debugger until a power-on reset has been performed or until a new DTR signal is received and the detection is redone.

The debugger has pull-down 100 kΩ resistors connected from CTS to ground through **R32** and **R56**.

3.2 Debug In

Use the footprint on **P15** to connect a header for external debuggers.

The **P15** header is not mounted by default. Populate it if you need to connect an external debugger.

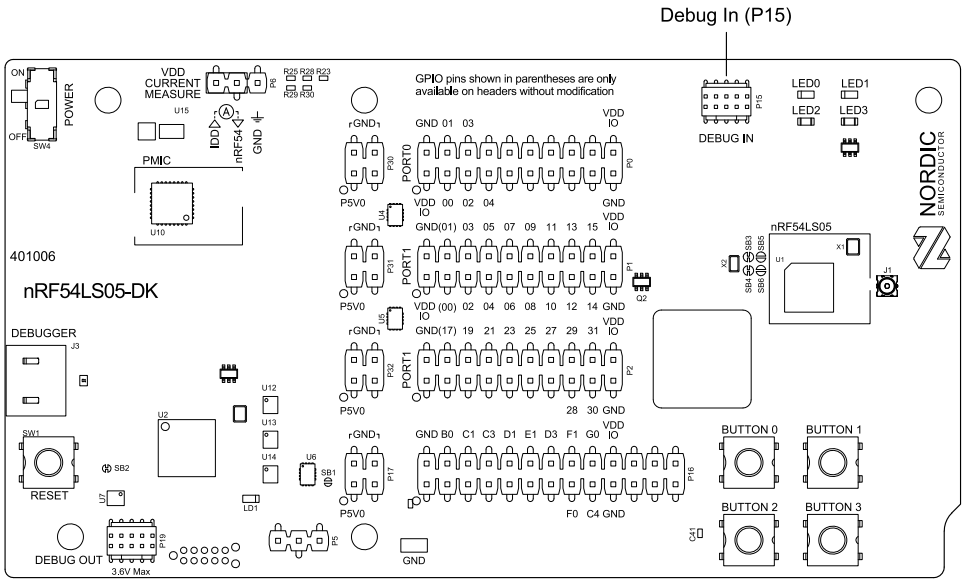

Figure 16: Location of the Debug In header footprint

The reference voltage for the Debug In header is connected to **VDD:IO**.

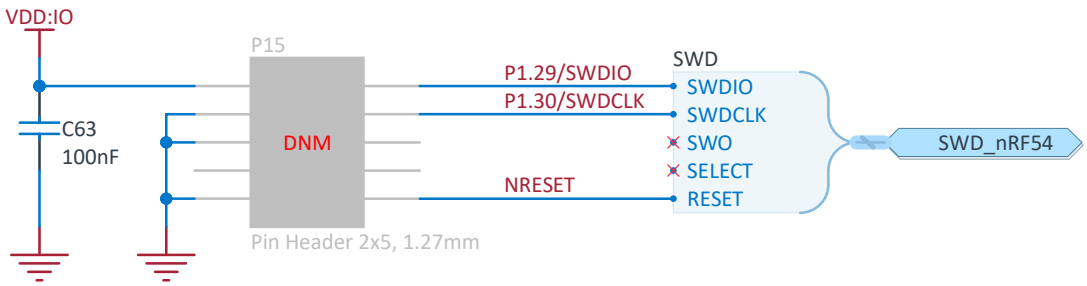

Figure 17: Debug In header signal connections

The following table describes the pinout of the **P15** header.

Pin number	Signal	Description
1	VDD:IO	I/O voltage reference for the external debugger
2	SWDIO	*SWD* data I/O
3	GND	Ground
4	SWDCLK	Serial wire clock line
5	GND	Ground
6	N.C.	Not used
7	N.C.	Not used
8	N.C.	Not used
9	GND	Ground
10	RESET	Reset line

*Table 8: Header **P15** pinout for connecting external debuggers*

3.3 Debug Out for programming external boards

Use the nRF54LS05 DK to program and debug external boards with the nRF51 Series, nRF52 Series, nRF53 Series, or nRF54 Series SoCs and nRF91 Series *System in Package (SiP)*s.

To program or debug an external board, connect to the Debug Out header **P19** using a 10-pin cable.

CAUTION: The programming cable used to connect to the external board must be no longer than 10 cm. Power the external board separately from the nRF54LS05 DK. The **VDD : SWD0** voltage must be within the range of 1.8 V to 3.6 V.

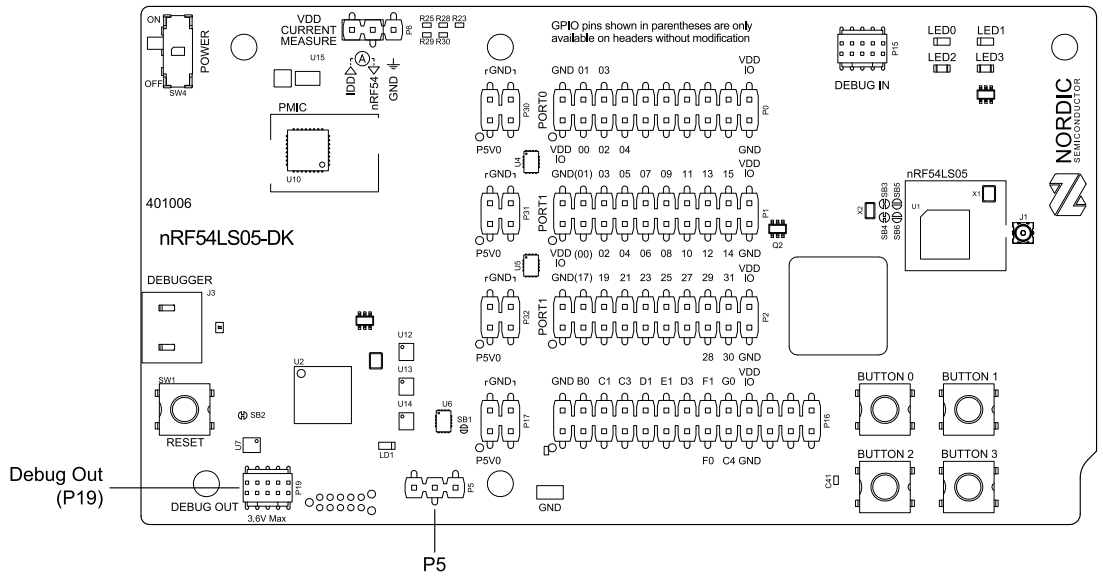

Figure 18: Location of the Debug Out header

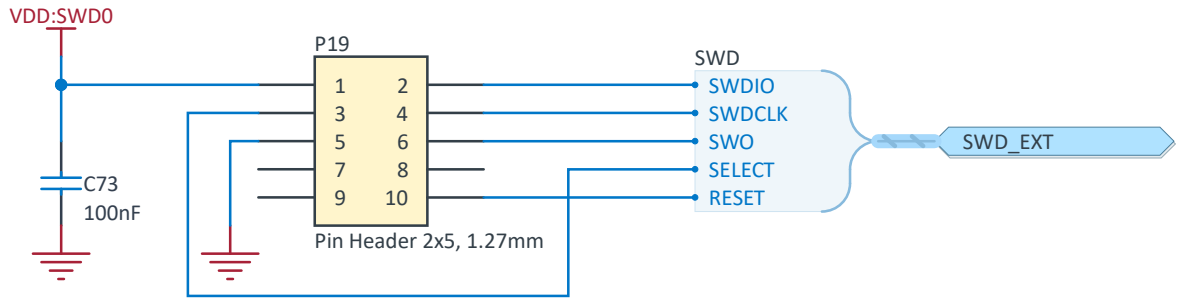

Figure 19: Debug Out header signal connections

The following table describes the pinout of the **P19** header.

Pin number	Signal	Description
1	VDD:SWD0	I/O voltage reference input from the external target.
2	SWD0_SWDIO	*SWD* data I/O.
3	SWD0_SELECT	Debug Out select signal. Connect to ground on the external board.
4	SWD0_SWDCLK	Serial wire clock line.
5	GND	Ground.
6	SWD0_SWO	*Serial Wire Output (SWO)* line is not used for programming and debugging over SWD.
7	N.C.	Not used.
8	N.C.	Not used.
9	N.C.	Not used.
10	SWD0_RESET	Reset line.

*Table 9: Header **P19** pinout for programming external targets*

The external target normally drives **VDD : SWD0** as the I/O voltage reference. Alternatively, supply **VDD : SWD0** through pin header **P5**. Pin 1 is **VDD : SWD0**, pin 2 is N.C., and pin 3 is GND.

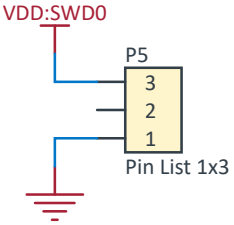

*Figure 20: Pin header **P5** for supplying **VDD : SWD0***

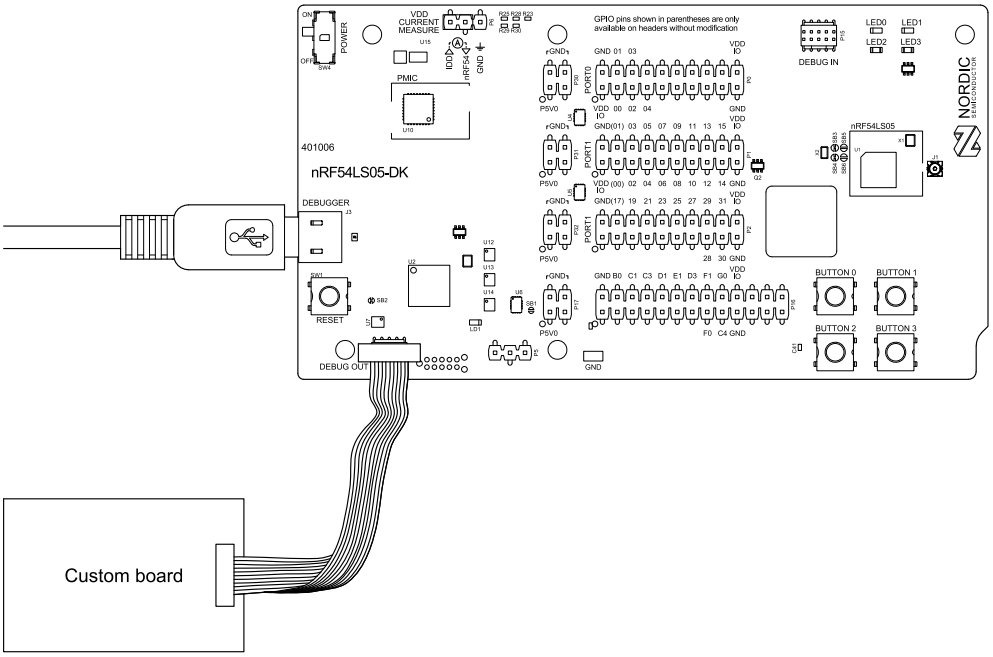

*Figure 21: Connecting an external board to **P19***

The debugger programs or debugs the target chip on the external board instead of the onboard nRF54LS05B SoC when pin 3 (**SWD0_SELECT**) of **P19** is connected to **GND** through the 10-pin flat cable.

4 Measurements

Current and radio frequency (RF) signals can be measured on the nRF54LS05 DK.

4.1 Current measurements

The current drawn by the nRF54LS05B SoC can be monitored on the nRF54LS05 DK.

Current can be measured using any of the following test instruments:

- Power Profiler Kit II (PPK2)
- Oscilloscope
- Ampere meter
- Power analyzer

The following sections provide information on the nRF54LS05 DK measurement setup. If the PPK2 is used for measuring current, see Power Profiler Kit II for more information. Power analyzer measurements are not described in this document.

The nRF54LS05 DK can measure current on VDD:nRF using **P6**.

> **Note:** The measurement readings might be noisy if the virtual serial port is open.

For more information on current measurement, see Current measurement guide: Introduction.

4.1.1 Set up the DK

Perform the following tasks to set up the nRF54LS05 DK for minimal current consumption.

- Disconnect the virtual serial ports and the programming interface between the debugger and the nRF54LS05B SoC using the Board Configurator app in nRF Connect for Desktop. For more information about the board controller, see Board control on page 15.
- If circuitry is connected to the **P19** Debug Out header, disconnect it.
- Remove the jumper from the **P6** header.

To reprogram the nRF54LS05B SoC while the nRF54LS05 DK is prepared for current measurements, replace the measurement devices on **P6** with the jumper.

4.1.2 Measure current profile with an oscilloscope

An oscilloscope can be used to measure the average current over a given time interval and capture the current profile.

1. Prepare the nRF54LS05 DK as described in Set up the DK.
2. Mount a 10 Ω ±0.1% 0402 resistor to **R24**, which is located on the back of the nRF54LS05 DK.
3. Set the oscilloscope to differential mode or a mode that is similar.
4. Connect the oscilloscope using two probes on the pins labeled **IDD** and **nRF54** on header **P6** as shown in Figure 22: Current measurement with an oscilloscope on page 23.

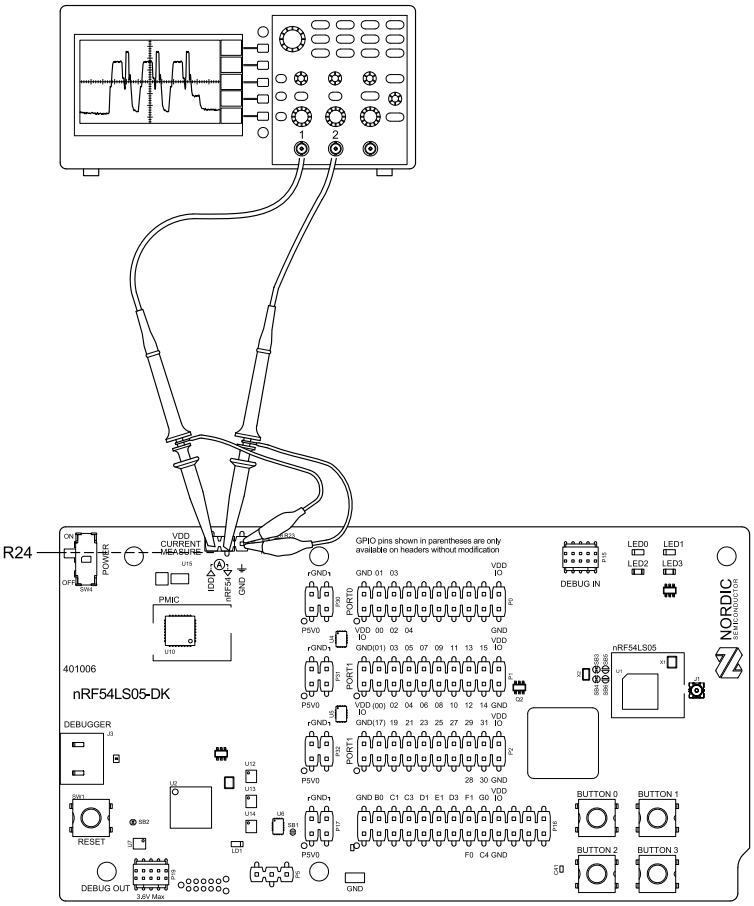

Figure 22: Current measurement with an oscilloscope

5. Calculate or plot the instantaneous current from the voltage drop across the **R24** resistor.

   Take the difference of the voltages measured on the two probes. The voltage drop is proportional to the current. The 10 Ω resistor causes a 10 mV drop for each 1 mA drawn by the circuit being measured.

The plotted voltage drop can be used to calculate the current at a given point in time. The current can then be averaged or integrated to analyze current and energy consumption over a specified period.

To reduce noise, do the following:

- Use GND leads that are as short as possible.
- Use probes with 1x attenuation.
- Enable averaging mode to reduce random noise.
- Enable high-resolution function if it is available.

Use a minimum sampling rate of 200 ksps, which corresponds to one sample every 5 µs, to get a reliable average current measurement.

To accurately measure the current consumption of the nRF54LS05 DK, configure the oscilloscope to display the full range of currents to measure in the selected time window. Adjust the vertical scale in the oscilloscope to cover the full range of currents without clipping. Leave a small margin at the top or bottom of the vertical axis. Use an oscilloscope with high dynamic range of 16 bits or more to measure both small and large changes in current accurately.

4.1.3 Measure average current with an ampere meter

The average current drawn by the nRF54LS05B SoC can be measured using an ampere meter. This method monitors the current in series with the nRF54LS05B SoC. Use a true *Root Mean Square (RMS)* ampere meter.

1. Prepare the nRF54LS05 DK as described in Set up the DK.
2. Connect an ampere meter between the pins labeled **IDD** and **nRF54** on header **P6** as shown in Figure 23: Current measurement with an ampere meter on page 24.
3. Set the average timing of the ampere meter to a long interval, such as 1 s or longer.
4. Set the dynamic range of the ampere meter from 1 µA to 15 mA.

   This range is wide enough to provide accurate measurements.

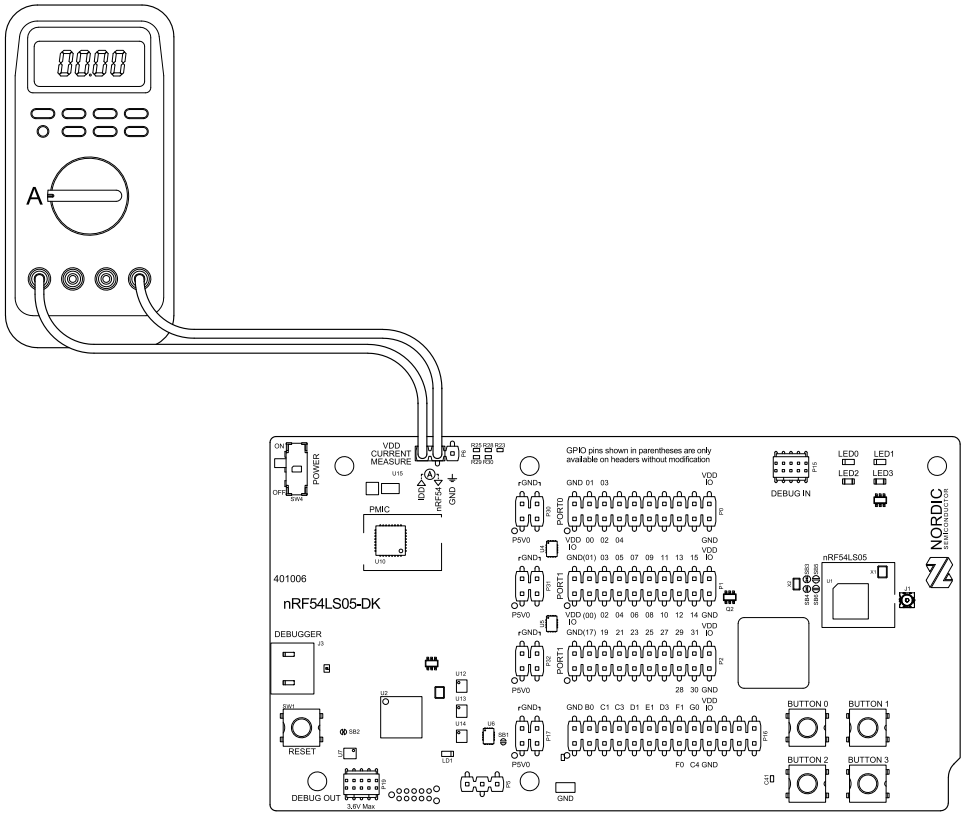

Figure 23: Current measurement with an ampere meter

Measure the average current consumption when the nRF54LS05B SoC is in a steady state, such as sleep mode, continuous TX, or RX. For applications with rapid changes in current consumption, consider using an oscilloscope, the Power Profiler Kit II (PPK2), or a power profiler.

4.2 RF measurements

The nRF54LS05 DK is equipped with a small coaxial connector **J1** to measure the radio frequency (RF) signal with a spectrum analyzer.

The connector is an *SWF* type connector with an internal switch. The Murata part number is MM8130-2600. By default, when a cable is not attached, the RF signal is routed to the onboard trace antenna.

In this example, a Murata test probe with part number MXHS83QE3000 is used with a standard *SubMiniature Version A (SMA)* connection on the other end for connecting instruments. The test probe is not included in the kit. When connecting the test probe, the internal switch in the SWF connector disconnects the onboard antenna and connects the RF signal from the nRF54LS05B SoC to the test probe.

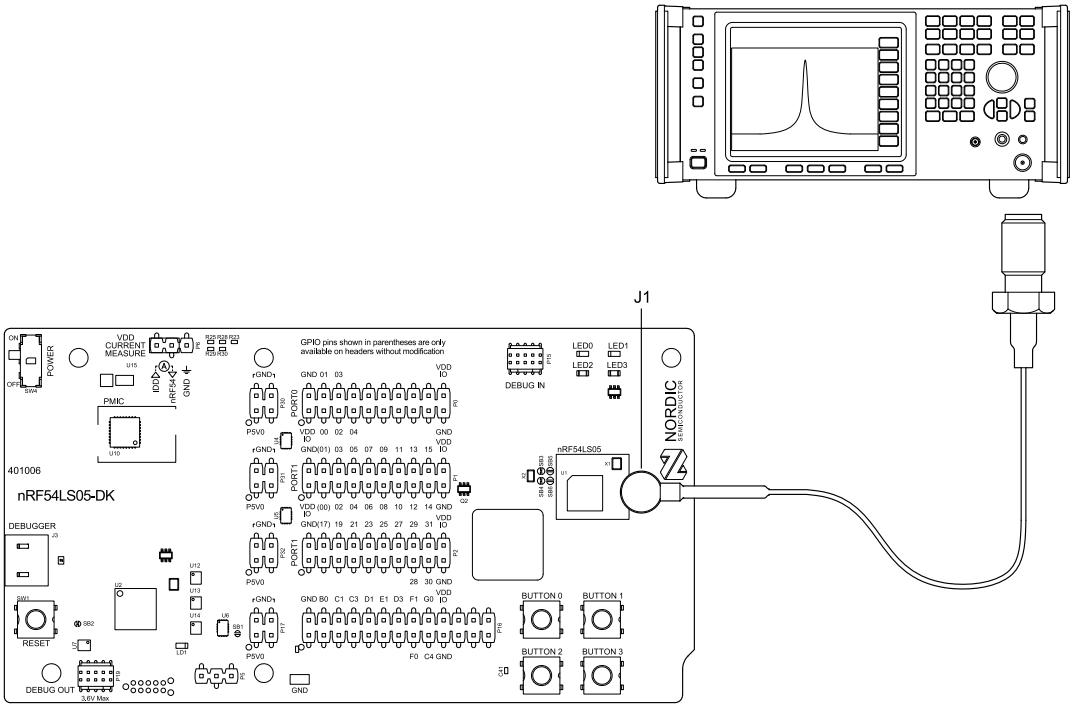

Figure 24: Connecting a spectrum analyzer

The connector and test probe add loss to the RF signal. See Table 10: Typical loss in connector and test probe, using Murata part number MXHS83QE3000 on page 25 for more information or consult the test probe user guide if you are using another model.

Frequency (MHz)	Loss (dB)
2440	1.0
4880	1.7
7320	2.6

Table 10: Typical loss in connector and test probe, using Murata part number MXHS83QE3000

The actual insertion loss varies with the orientation and bending of the cable and with the production batch. Contact your cable supplier for more information.

Glossary

Clear to Send (CTS)

In flow control, the receiving end is ready and telling the far end to start sending.

Data Terminal Ready (DTR)

A control signal in RS-232 serial communications transmitted from data terminal equipment, such as a computer, to data communications equipment.

Development Kit (DK)

A hardware development platform used for application development.

Electrostatic Discharge (ESD)

A sudden discharge of electric current between two electrically charged objects.

General-Purpose Input/Output (GPIO)

A digital signal pin that can be used as input, output, or both. It is uncommitted and can be controlled by the user at runtime.

Hardware Flow Control (HWFC)

A handshaking mechanism used to prevent an overflow of bytes in modems. It uses two dedicated pins on the RS-232 connector, Request to Send and Clear to Send.

Integrated Circuit (IC)

A semiconductor chip consisting of fabricated transistors, resistors, and capacitors.

Mass Storage Device (MSD)

Any storage device that makes it possible to store and port large amounts of data in a permanent and machine-readable fashion.

Microcontroller Unit (MCU)

A small computer on a single metal-oxide-semiconductor integrated circuit chip.

Microwave coaxial connector with switch (SWF)

A small, RF surface-mount switch connector series for wireless applications.

Onboard (OB)

A function that is delivered on the chip microcontroller.

Power Management Integrated Circuit (PMIC)

A chip used for various functions related to power management.

Printed Circuit Board (PCB)

A board that connects electronic components.

Receive Data (RXD)

A signal line in a serial interface that receives data from another device.

Request to Send (RTS)

In flow control, the transmitting end is ready and requesting the far end for a permission to transfer data.

Root Mean Square (RMS)

An RMS meter calculates the equivalent Direct Current (DC) value of an Alternating Current (AC) waveform. A true RMS meter can accurately measure both pure waves and the more complex nonsinusoidal waves.

Serial Wire Debug (SWD)

A standard two-wire interface for programming and debugging Arm® CPUs.

Serial Wire Output (SWO)

A data line for tracing and logging.

SubMiniature Version A (SMA)

A semi-precision coaxial RF connector for coaxial cables with a screw-type coupling mechanism.

System in Package (SiP)

Several integrated circuits, often from different technologies, enclosed in a single module that performs as a system or subsystem.

Transmit Data (TXD)

A signal line in a serial interface that transmits data to another device.

Universal Asynchronous Receiver/Transmitter (UART)

A hardware device for asynchronous serial communication between devices.

Universal Serial Bus (USB)

An industry standard that establishes specifications for cables and connectors and protocols for connection, communication, and power supply between computers, peripheral devices, and other computers.

User Information Configuration Registers (UICR)

Non-volatile memory registers used to configure user-specific settings.

Recommended reading

In addition to the information in this document, you may need to consult other documents.

Nordic documentation

- nRF54LS05A | nRF54LS05B Datasheet

Legal notices

By using this documentation you agree to our terms and conditions of use. Nordic Semiconductor may change these terms and conditions at any time without notice.

Liability disclaimer

Nordic Semiconductor ASA reserves the right to make changes without further notice to the product to improve reliability, function, or design. Nordic Semiconductor ASA does not assume any liability arising out of the application or use of any product or circuits described herein.

Nordic Semiconductor ASA does not give any representations or warranties, expressed or implied, as to the accuracy or completeness of such information and shall have no liability for the consequences of use of such information. If there are any discrepancies, ambiguities or conflicts in Nordic Semiconductor's documentation, the Datasheet prevails.

Nordic Semiconductor ASA reserves the right to make corrections, enhancements, and other changes to this document without notice.

Life support applications

Nordic Semiconductor products are not designed for use in life support appliances, devices, or systems where malfunction of these products can reasonably be expected to result in personal injury.

Nordic Semiconductor ASA customers using or selling these products for use in such applications do so at their own risk and agree to fully indemnify Nordic Semiconductor ASA for any damages resulting from such improper use or sale.

RoHS and REACH statement

Complete hazardous substance reports, material composition reports and latest version of Nordic's REACH statement can be found on our website www.nordicsemi.com.

Trademarks

All trademarks, service marks, trade names, product names, and logos appearing in this documentation are the property of their respective owners.

Copyright notice

© 2026 Nordic Semiconductor ASA. All rights are reserved. Reproduction in whole or in part is prohibited without the prior written permission of the copyright holder.

