Power Metal Strip® Resistors, Low Value, High Power, Surface-Mount, 4-Terminal

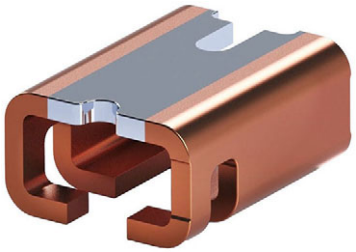

LINKS TO ADDITIONAL RESOURCES

3D Models | Design Tools | Infographics | Calculators

FEATURES

- 4-terminal design allows for 1 % tolerance down to 0.0002 Ω
- High power-to-footprint print size ratio
- All welded Power Metal Strip® construction is ideal for all types of current sensing, voltage division and pulse applications
- Proprietary processing technique produces extremely low resistance values, down to 0.0002 Ω
- Sulfur resistance by construction that is unaffected by high sulfur environments
- Solid metal MnCu, MnCuSn, or NiCr alloy resistive element with low TCR (< 20 ppm/°C)
- Very low inductance < 1.5 nH
- Low thermal EMF (< 3 µV/°C)
- Maximum solder temperature up to 350 °C for 30 s
- AEC-Q200 qualified (1)
- PATENT(S): www.vishay.com/patents
- Material categorization: for definitions of compliance please see www.vishay.com/doc?99912

AUTOMOTIVE GRADE Available

Pb-free

RoHS COMPLIANT

HALOGEN FREE GREEN (5-2008)

Note

(1) Flame retardance test may not be applicable to some resistor technologies

STANDARD ELECTRICAL SPECIFICATIONS

GLOBAL MODEL	SIZE	POWER RATING (1) $P_{70\,°C}$ W	TOLERANCE ± %	RESISTANCE VALUE RANGE (2) Ω	WEIGHT (typical) g/1000 pieces
WSK1216	1216	3.0	1.0	2m	60
		3.0	1.0	1m	60
		4.0	1.0	0.75m	60
		5.0	1.0	0.5m	60
		8.0	1.0	0.3m	60
		8.0	1.0	0.2m	60

Notes

- The full power rating of Power Metal Strip resistors are dependent upon the ability of the circuit board to dissipate the heat energy created in the resistance element. It is recommended to follow common design practices for power semiconductors that ensure the junction temperature is maintained with in thermal limits by using large pad surfaces, thermal vias, heavier copper weights, internal layers as well as other thermal spreading features. The thermal resistance values provided function in the same manner as junction to terminal temperature
- Qualified to AEC-Q200 rev. D

(1) Terminal temperature power rating

(2) Other values may be available, contact factory

GLOBAL PART NUMBER INFORMATION

Global Part Numbering Example: WSK12161L000FEA (WSK1216, 0.001 Ω, ± 1 %)
(visit **www.vishay.net** Vishay Dale parts numbering manual for all options)

W	S	K	1	2	1	6	1	L	0	0	0	F	E	A		

GLOBAL MODEL (7 digits)	RESISTANCE VALUE (5 digits)	TOLERANCE CODE (1 digit)	PACKAGING CODE (1) (2 digits)	SPECIAL (2) (2 digits)
WSK1216	**L** = mΩ **1L000** = 0.0010 Ω **L5000** = 0.0005 Ω	**F** = ± 1.0 %	**EA** = lead (Pb)-free, tape / reel	(dash number) (up to 2 digits) From **1 to 99** as applicable

Notes

(1) Packaging code: EB (lead (Pb)-free) is a non-standard packaging code designating 1000 piece reels. The non-standard packaging code is identical to our standard EA (lead (Pb)-free), except that it has a package quantity of 1000 pieces

(2) Follow link for customization capabilities: www.vishay.com/doc?48163

PATENT(S): www.vishay.com/patents
This Vishay product is protected by one or more United States and international patents.

For technical questions, contact: ww2bresistors@vishay.com

THIS DOCUMENT IS SUBJECT TO CHANGE WITHOUT NOTICE. THE PRODUCTS DESCRIBED HEREIN AND THIS DOCUMENT ARE SUBJECT TO SPECIFIC DISCLAIMERS, SET FORTH AT www.vishay.com/doc?91000

TECHNICAL SPECIFICATIONS		
PARAMETER	**UNIT**	**WSK RESISTOR CHARACTERISTICS**
Component temperature coefficient (including terminal) (1)	ppm/°C	± 35, 0.2 mΩ and 0.3 mΩ ± 50, 1 mΩ and 2 mΩ ± 75, 0.75 mΩ ± 150, 0.5 mΩ
Element TCR (2)	ppm/°C	< 20
Operating temperature range	°C	-65 to +170
Maximum working voltage (3)	V	$(P \times R)^{1/2}$

Notes

(1) Component TCR - total TCR that includes the TCR effects of the resistor element and the copper terminal; over temperature of 25 °C to +170 °C

(2) Element TCR - only applies to the alloy used for the resistor element

(3) Maximum working voltage - the WSL is not voltage sensitive, but is limited by power / energy dissipation and is also not ESD sensitive

DIMENSIONS in inches (millimeters)

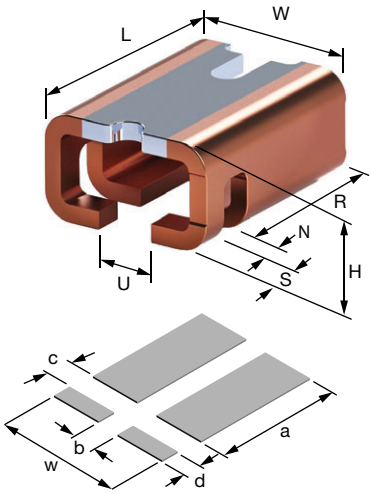

CONSTRUCTION OUTLINE

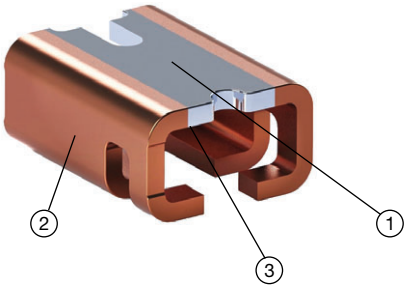

1. Resistive element: refer to table below for element material
2. Terminal: solid copper
3. Terminal / element weld

MODEL	DIMENSIONS in inches (millimeters)						
	W	**L**	**H**	**R (REF.)**	**S**	**U**	**N**
WSK1216	0.122 - 0.014 (3.1 - 0.35)	0.150 ± 0.012 (3.81 ± 0.3)	0.075 - 0.014 (1.9 - 0.35)	0.106 (2.70)	0.020 ± 0.004 (0.5 ± 0.1)	0.031 + 0.012 (0.8 + 0.3)	0.024 ± 0.006 (0.6 ± 0.15)

MODEL	SOLDER PAD DIMENSIONS				
	a	**b**	**c**	**d**	**w**
WSK1216	0.116 (2.95)	0.024 (0.61)	0.020 (0.50)	0.028 (0.70)	0.142 (3.60)

MODEL	RESISTANCE VALUE (mΩ)	THERMAL RESISTANCE (°C/W)	ELEMENT MATERIAL
WSK1216	0.2	5.1	MnCuSn
	0.3	6.8	MnCuSn
	0.5	8.5	MnCuSn
	0.75	11.0	MnCuSn
	1.0	13.5	MnCu
	2.0	18.6	NiCr

Notes

- 3D models available: www.vishay.com/doc?30334
- Surface mount solder profile recommendations: www.vishay.com/doc?31052

For technical questions, contact: ww2bresistors@vishay.com

THIS DOCUMENT IS SUBJECT TO CHANGE WITHOUT NOTICE. THE PRODUCTS DESCRIBED HEREIN AND THIS DOCUMENT ARE SUBJECT TO SPECIFIC DISCLAIMERS, SET FORTH AT www.vishay.com/doc?91000

DERATING - AMBIENT TEMPERATURE

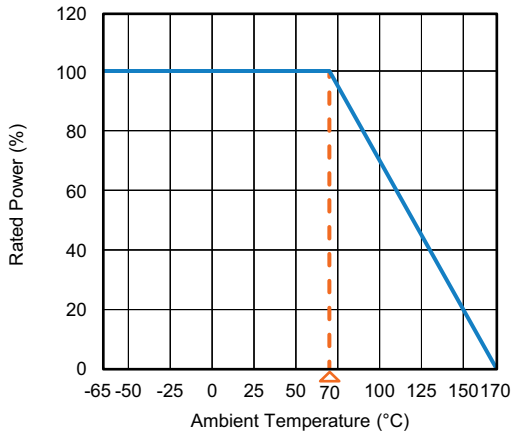

DERATING - TERMINAL TEMPERATURE

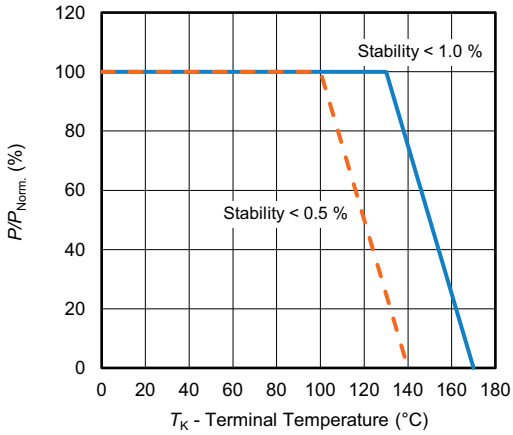

Example: WSK1216 0.001 Ω

PULSE CAPABILITY

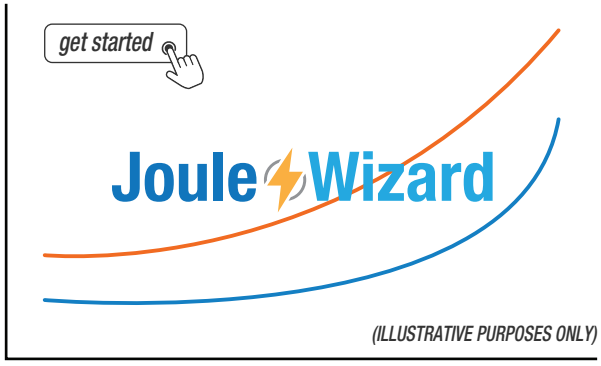

www.vishay.com/en/resistors/joulewizard/

PERFORMANCE		
TEST	**CONDITIONS OF TEST**	**TEST LIMITS**
Thermal shock	-55 °C to +150 °C, 2000 cycles, 15 min at each extreme	± 0.5 %
Short time overload	Refer to link for short time overload performance and pulse capability; www.vishay.com/en/resistors/power-metal-strip-calculator/	± 0.5 %
Low temperature operation	-65 °C for 24 h	± 0.5 %
High temperature exposure	2000 h at +170 °C	± 1.0 %
Bias humidity	+85 °C, 85 % RH, 10 % bias, 1000 h	± 0.5 %
Mechanical shock	100 *g*'s for 6 ms, 5 pulses	± 0.5 %
Vibration	Frequency varied 10 Hz to 2000 Hz in 1 min, 3 directions, 12 h	± 0.5 %
Load life	2000 h at +70 °C, 1.5 h "ON", 0.5 h "OFF"	± 1.0 %
Resistance to solder heat	3 x at 250 °C ± 5 °C for 30 s ± 5 s	± 0.5 %
Moisture resistance	MIL-STD-202, method 106, 0 % power, 7b not required	± 0.5 %

Note

- Contact ww2bresistors@vishay.com for application specific performance requirements or qualification data. Typical performance is better than stated test limits

For technical questions, contact: ww2bresistors@vishay.com

THIS DOCUMENT IS SUBJECT TO CHANGE WITHOUT NOTICE. THE PRODUCTS DESCRIBED HEREIN AND THIS DOCUMENT ARE SUBJECT TO SPECIFIC DISCLAIMERS, SET FORTH AT www.vishay.com/doc?91000

PACKAGING (1)				
MODEL	REEL			
	TAPE WIDTH	DIAMETER	PIECES/REEL	CODE
WSK1216	12 mm / embossed plastic	330 mm / 13"	2000	EA

Notes

- Embossed carrier tape per EIA-481

(1) Additional packaging details at www.vishay.com/doc?20051

REEL ORIENTATION

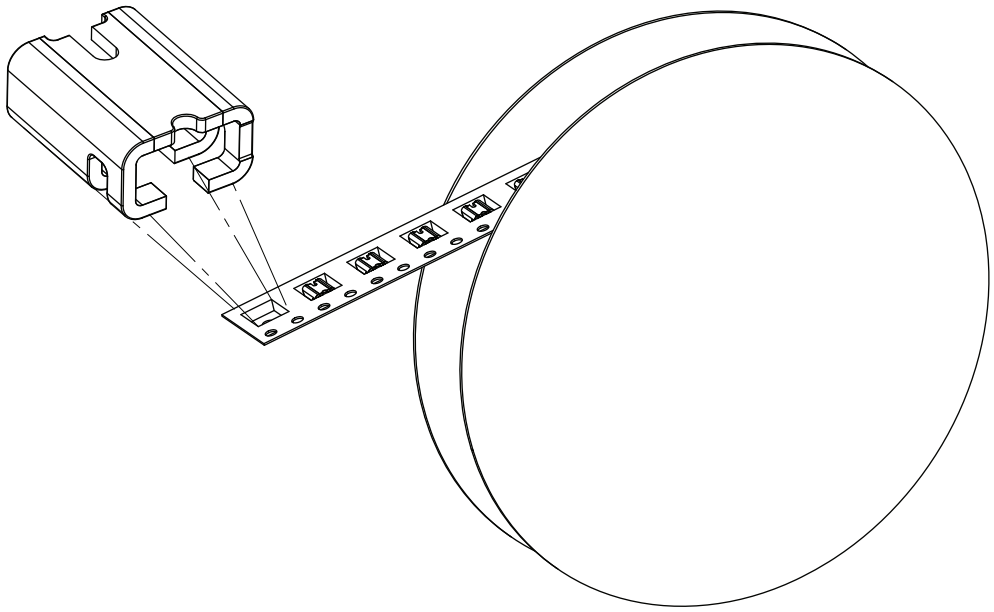

LINKS TO RELATED DOCUMENTS	
SELECTOR GUIDE	
Overview of Automotive Grade Products	www.vishay.com/doc?49924
TECHNICAL NOTES	
SMD Current Sense: AEC-Q200 vs. Vishay Qualification	www.vishay.com/doc?30416
MIL-PRF vs. AEC-Q200: Do You Know What You Are Getting?	www.vishay.com/doc?11000
WHITE PAPER	
Thermal Management for Surface-Mount Devices	www.vishay.com/doc?30380
Temperature Coefficient of Resistance for Current Sensing	www.vishay.com/doc?30405

For technical questions, contact: ww2bresistors@vishay.com
THIS DOCUMENT IS SUBJECT TO CHANGE WITHOUT NOTICE. THE PRODUCTS DESCRIBED HEREIN AND THIS DOCUMENT ARE SUBJECT TO SPECIFIC DISCLAIMERS, SET FORTH AT www.vishay.com/doc?91000

Disclaimer

ALL PRODUCT, PRODUCT SPECIFICATIONS AND DATA ARE SUBJECT TO CHANGE WITHOUT NOTICE TO IMPROVE RELIABILITY, FUNCTION OR DESIGN OR OTHERWISE.

Vishay Intertechnology, Inc., its affiliates, agents, and employees, and all persons acting on its or their behalf (collectively, “Vishay”), disclaim any and all liability for any errors, inaccuracies or incompleteness contained in any datasheet or in any other disclosure relating to any product.

Vishay makes no warranty, representation or guarantee regarding the suitability of the products for any particular purpose or the continuing production of any product. To the maximum extent permitted by applicable law, Vishay disclaims (i) any and all liability arising out of the application or use of any product, (ii) any and all liability, including without limitation special, consequential or incidental damages, and (iii) any and all implied warranties, including warranties of fitness for particular purpose, non-infringement and merchantability.

Statements regarding the suitability of products for certain types of applications are based on Vishay's knowledge of typical requirements that are often placed on Vishay products in generic applications. Such statements are not binding statements about the suitability of products for a particular application. It is the customer's responsibility to validate that a particular product with the properties described in the product specification is suitable for use in a particular application. Parameters provided in datasheets and / or specifications may vary in different applications and performance may vary over time. All operating parameters, including typical parameters, must be validated for each customer application by the customer's technical experts. Product specifications do not expand or otherwise modify Vishay's terms and conditions of purchase, including but not limited to the warranty expressed therein.

Hyperlinks included in this datasheet may direct users to third-party websites. These links are provided as a convenience and for informational purposes only. Inclusion of these hyperlinks does not constitute an endorsement or an approval by Vishay of any of the products, services or opinions of the corporation, organization or individual associated with the third-party website. Vishay disclaims any and all liability and bears no responsibility for the accuracy, legality or content of the third-party website or for that of subsequent links.

Vishay products are not designed for use in life-saving or life-sustaining applications or any application in which the failure of the Vishay product could result in personal injury or death unless specifically qualified in writing by Vishay. Customers using or selling Vishay products not expressly indicated for use in such applications do so at their own risk. Please contact authorized Vishay personnel to obtain written terms and conditions regarding products designed for such applications.

No license, express or implied, by estoppel or otherwise, to any intellectual property rights is granted by this document or by any conduct of Vishay. Product names and markings noted herein may be trademarks of their respective owners.

© 2026 VISHAY INTERTECHNOLOGY, INC. ALL RIGHTS RESERVED

THIS DOCUMENT IS SUBJECT TO CHANGE WITHOUT NOTICE. THE PRODUCTS DESCRIBED HEREIN AND THIS DOCUMENT ARE SUBJECT TO SPECIFIC DISCLAIMERS, SET FORTH AT www.vishay.com/doc?91000