Surface Mount Multilayer Ceramic Chip Capacitors for High Voltage Commercial Applications



FEATURES

- Available in body sizes from 1206 to 2225
- Ultra stable C0G (NP0) or high capacitance X7R dielectrics
- Ni-barrier with 100 % tin terminations
- Polymer terminations available
- Dry sheet technology process
- Base Metal Electrode system (BME)
- Material categorization: for definitions of compliance please see www.vishay.com/doc?99912

Pb-free
RoHS COMPLIANT
HALOGEN FREE
GREEN (5-2008)

APPLICATIONS

- Consumer electronics
- Input filter capacitors
- Output filter capacitors
- Snubber capacitors reduce MOSFET voltage spikes
- Filtering for switching power supplies

ELECTRICAL SPECIFICATIONS

C0G (NP0) DIELECTRIC

GENERAL SPECIFICATION

Note
Electrical characteristics at +25 °C unless otherwise specified

Operating Temperature: -55 °C to +125 °C

Capacitance Range: 1.5 pF to 82 nF

Voltage Range: 500 V_{DC} to 3000 V_{DC}

Temperature Coefficient of Capacitance (TCC):
0 ppm/°C ± 30 ppm/°C from -55 °C to +125 °C

Dissipation Factor (DF):
0.1 % at 1.0 V_{RMS} and 1 MHz for values ≤ 1000 pF
0.1 % at 1.0 V_{RMS} and 1 kHz for values > 1000 pF

Insulating Resistance:
≥ 10 GΩ or R x C ≥ 500 ΩF, whichever is less

X7R DIELECTRIC

GENERAL SPECIFICATION

Note
Electrical characteristics at +25 °C unless otherwise specified

Operating Temperature: -55 °C to +125 °C

Capacitance Range: 100 pF to 100 nF

Voltage Range: 500 V_{DC} to 2000 V_{DC}

Temperature Coefficient of Capacitance (TCC):
± 15 %, -55 °C to +125 °C with 0 V_{DC} applied

Dissipation Factor (DF):
2.5 % maximum at 1.0 V_{RMS} and 1 kHz

Insulating Resistance:
≥ 10 GΩ or R x C ≥ 500 ΩF, whichever is less

For technical questions, contact: mlcc@vishay.com
THIS DOCUMENT IS SUBJECT TO CHANGE WITHOUT NOTICE. THE PRODUCTS DESCRIBED HEREIN AND THIS DOCUMENT ARE SUBJECT TO SPECIFIC DISCLAIMERS, SET FORTH AT www.vishay.com/doc?91000

QUICK REFERENCE DATA

DIELECTRIC	CASE	MAXIMUM VOLTAGE (V)	CAPACITANCE	
			MINIMUM	MAXIMUM
C0G (NP0)	1206	3000	1.2 pF	6.8 nF
	1210	3000	10 pF	3.9 nF
	1808	3000	2.2 pF	3.3 nF
	1812	3000	10 pF	22 nF
	1825	3000	10 pF	22 nF
	2220	2000	10 pF	10 nF
	2225	2000	10 pF	10 nF
X7R	1206	2000	100 pF	1.2 nF
	1210	2000	100 pF	1.2 nF
	1808	2000	150 pF	1.8 nF
	1812	2000	270 pF	1.8 nF
	1825	1000	1.0 nF	100 nF
	2220	1000	1.0 nF	1.8 nF
	2225	1000	1.0 nF	1.8 nF

ORDERING INFORMATION

VJ1210	A	151	J	X	G	T	W1HV
SIZE CODE	DIELECTRIC	CAPACITANCE	TOLERANCE	TERMINATION	VOLTAGE	PACKAGING	PROCESS CODE HIGH VOLTAGE FOR COMMERCIAL
1206 1210 1808 1812 1825 2220 2225	A = C0G (NP0) Y = X7R	Two significant digits followed by the number of zeros: 1R0 = 1.0 pF 100 = 100 pF 101 = 100 pF 102 = 1000 pF 103 = 10 000 pF 104 = 100 000 pF	**C0G (NP0)** Cap. < 10 pF: B = ± 0.10 pF C = ± 0.25 pF D = ± 0.50 pF Cap. ≥ 10 pF: F = ± 1 % J = ± 5 % K = ± 10 % **X7R** J = ± 5 % K = ± 10 % M = ± 20 %	X = 100 % plated tin B = polymer, 100 % plated tin	E = 500 V L = 630 V G = 1000 V R = 1500 V F = 2000 V H = 3000 V	C = 7" reel / paper tape P = 13" reel / paper tape T = 7" reel / plastic tape R = 13" reel / plastic tape	

DIMENSIONS in inches (millimeters)

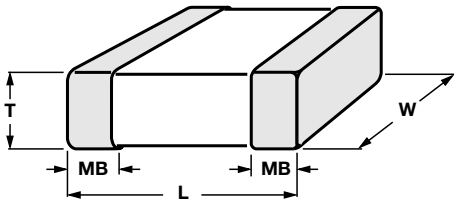

SIZE CODE	L	W	T	MB
1206	3.30 ± 0.30	1.60 ± 0.20	See thickness codes in table "Packaging Dimensions and Quantities"	0.60 ± 0.20
1210	3.30 ± 0.40	2.50 ± 0.30		0.75 ± 0.35
1808	4.50 + 0.50 / - 0.30	2.00 ± 0.25		0.75 ± 0.35
1812	4.50 + 0.50 / - 0.30	3.20 ± 0.40		0.75 ± 0.35
1825	4.50 + 0.50 / - 0.30	6.30 ± 0.40		0.75 ± 0.35
2220	5.7 ± 0.40	5.00 ± 0.40		0.85 ± 0.35
2225	5.7 ± 0.40	6.30 ± 0.40		0.85 ± 0.35

For technical questions, contact: mlcc@vishay.com
THIS DOCUMENT IS SUBJECT TO CHANGE WITHOUT NOTICE. THE PRODUCTS DESCRIBED HEREIN AND THIS DOCUMENT ARE SUBJECT TO SPECIFIC DISCLAIMERS, SET FORTH AT www.vishay.com/doc?91000

SELECTION CHART: 100 % Sn TERMINATION (X)																	
DIELECTRIC		C0G (NP0)															
STYLE		VJ1206				VJ1210				VJ1808				VJ1812			
SIZE CODE		1206				1210				1808				1812			
VOLTAGE (V_{DC})		1000	1500	2000	3000	1000	1500	2000	3000	1000	1500	2000	3000	1000	1500	2000	3000
VOLTAGE CODE		G	R	F	H	G	R	F	H	G	R	F	H	G	R	F	H
CAP. CODE	CAP.																
1R0	1.0 pF																
1R2	1.2 pF																
1R5	1.5 pF	X	X	X													
1R8	1.8 pF	X	X	X													
2R2	2.2 pF	X	X	X						C	C	C	C				
2R7	2.7 pF	X	X	X						C	C	C	C				
3R3	3.3 pF	X	X	X						C	C	C	C				
3R9	3.9 pF	X	X	X						C	C	C	C				
4R7	4.7 pF	X	X	X						C	C	C	C				
5R0	5.0 pF	X	X	X						C	C	C	C				
5R6	5.6 pF	X	X	X						C	C	C	C				
6R8	6.8 pF	X	X	X						C	C	C	C				
8R2	8.2 pF	X	X	X						C	C	C	C				
100	10 pF	X	X	X	E	M	M	M	F	C	C	C	C	C	C	C	C
120	12 pF	X	X	X	E	M	M	M	F	C	C	C	C	C	C	C	C
150	15 pF	X	X	X	E	M	M	M	F	C	C	C	C	C	C	C	C
180	18 pF	X	X	X	E	M	M	M	F	C	C	C	C	C	C	C	C
220	22 pF	X	X	X	E	M	M	M	F	C	C	C	C	C	C	C	C
270	27 pF	X	X	X	E	M	M	M	F	C	C	C	C	C	C	C	C
330	33 pF	X	M	M	E	M	M	M	F	C	C	C	C	C	C	C	C
390	39 pF	X	M	M	E	M	M	M	F	C	C	C	C	C	C	C	C
470	47 pF	X	M	M	E	M	M	M	F	C	C	C	C	C	C	C	C
560	56 pF	X	C	C	E	M	C	C	F	C	C	C	C	C	C	C	C
680	68 pF	X	C	C	E	M	C	C	F	C	C	C	C	C	C	C	C
820	82 pF	X	C	C	E	M	C	C	F	C	C	C	C	C	C	C	C
101	100 pF	X	C	C	E	C	C	C	F	C	C	C	F	C	C	C	C
121	120 pF	X	E	E	E	C	C	C	F	C	C	C	F	C	C	C	C
151	150 pF	C	E	E		C	E	E	F	C	F	F	F	C	C	C	C
181	180 pF	E	E	E		C	E	E	F	C	F	F	F	C	C	C	F
221	220 pF	E	E	E		E	E	E	F	C	F	F	F	C	C	C	F
271	270 pF	E	P	P		E	F	F	G	F	F	F	F	C	F	F	F
331	330 pF	E	P	P		E	F	F		F	F	F	F	C	F	F	F
391	390 pF	E	P	P		E	G	G		F	F	F	F	C	F	F	F
471	470 pF	E	E	E		E	C	C		F	F	F	F	F	F	F	F
561	560 pF	E				E	G	G		F	F	F		F	F	F	F
681	680 pF	E				E	G	G		F	F	F		F	F	F	F
821	820 pF	E				E	G	G		F	F	F		F	F	F	G
102	1.0 nF	E				E	G	G		F	F	F		F	F	F	G
122	1.2 nF					E	F	F		F	F	F		F	F	F	
152	1.5 nF					F	G	G		F	F	F		F	F	F	
182	1.8 nF					G	G	G		F	F	F		E	F	F	
222	2.2 nF					G				F				F	F	F	
272	2.7 nF					G								F	G	G	
332	3.3 nF					G								F	G	G	
392	3.9 nF					G								G			
472	4.7 nF													G			
562	5.6 nF													G			
682	6.8 nF																
822	8.2 nF																
103	10 nF																
123	12 nF																

For technical questions, contact: mlcc@vishay.com
THIS DOCUMENT IS SUBJECT TO CHANGE WITHOUT NOTICE. THE PRODUCTS DESCRIBED HEREIN AND THIS DOCUMENT ARE SUBJECT TO SPECIFIC DISCLAIMERS, SET FORTH AT www.vishay.com/doc?91000

SELECTION CHART: 100 % Sn TERMINATION (X)											
DIELECTRIC		C0G (NP0)									
STYLE		VJ1825				VJ2220			VJ2225		
SIZE CODE		1825				2220			2225		
VOLTAGE (V_{DC})		1000	1500	2000	3000	1000	1500	2000	1000	1500	2000
VOLTAGE CODE		G	R	F	H	G	R	F	G	R	F
CAP. CODE	CAP.										
1R0	1.0 pF										
1R2	1.2 pF										
1R5	1.5 pF										
1R8	1.8 pF										
2R2	2.2 pF										
2R7	2.7 pF										
3R3	3.3 pF										
3R9	3.9 pF										
4R7	4.7 pF										
5R0	5.0 pF										
5R6	5.6 pF										
6R8	6.8 pF										
8R2	8.2 pF										
100	10 pF	F	F	F	F	F	F	F	F	F	F
120	12 pF	F	F	F	F	F	F	F	F	F	F
150	15 pF	F	F	F	F	F	F	F	F	F	F
180	18 pF	F	F	F	F	F	F	F	F	F	F
220	22 pF	F	F	F	F	F	F	F	F	F	F
270	27 pF	F	F	F	F	F	F	F	F	F	F
330	33 pF	F	F	F	F	F	F	F	F	F	F
390	39 pF	F	F	F	F	F	F	F	F	F	F
470	47 pF	F	F	F	F	F	F	F	F	F	F
560	56 pF	F	F	F	F	F	F	F	F	F	F
680	68 pF	F	F	F	F	F	F	F	F	F	F
820	82 pF	F	F	F	F	F	F	F	F	F	F
101	100 pF	F	F	F	F	F	F	F	F	F	F
121	120 pF	F	F	F	F	F	F	F	F	F	F
151	150 pF	F	F	F	F	F	F	F	F	F	F
181	180 pF	F	F	F	F	F	F	F	F	F	F
221	220 pF	F	F	F	F	F	F	F	F	F	F
271	270 pF	F	F	F	F	F	F	F	F	F	F
331	330 pF	F	F	F	F	F	F	F	F	F	F
391	390 pF	F	F	F	F	F	F	F	F	F	F
471	470 pF	F	F	F	F	F	F	F	F	F	F
561	560 pF	F	F	F	F	F	F	F	F	F	F
681	680 pF	F	F	F	F	F	F	F	F	F	F
821	820 pF	F	F	F	F	F	F	F	F	F	F
102	1.0 nF	F	F	F	F	F	F	F	F	F	F
122	1.2 nF	F	F	F		F	F	F	F	F	F
152	1.5 nF	F	F	F		F	F	F	F	F	F
182	1.8 nF	F	F	F		F	F	F	F	F	F
222	2.2 nF	F	F	F		F	F	F	F	F	F
272	2.7 nF	F	F	F		F	F	F	F	F	F
332	3.3 nF	F	F	F		F	F	F	F	F	F
392	3.9 nF	F	F	F		F	F	F	F	F	F
472	4.7 nF	F	F	F		F	F	F	F	F	F
562	5.6 nF					F			F	F	F
682	6.8 nF					F			F	F	F
822	8.2 nF					G			F	G	G
103	10 nF					G			G	G	G
123	12 nF										

For technical questions, contact: mlcc@vishay.com
THIS DOCUMENT IS SUBJECT TO CHANGE WITHOUT NOTICE. THE PRODUCTS DESCRIBED HEREIN AND THIS DOCUMENT ARE SUBJECT TO SPECIFIC DISCLAIMERS, SET FORTH AT www.vishay.com/doc?91000

SELECTION CHART: 100 % Sn TERMINATION (X)														
DIELECTRIC		X7R												
STYLE		VJ1206	VJ1210			VJ1808			VJ1812			VJ1825	VJ2220	VJ2225
SIZE CODE		1206	1210			1808			1812			1825	2220	2225
VOLTAGE (V_{DC})		1000	1000	1500	2000	1000	1500	2000	1000	1500	2000	1000	1000	1000
VOLTAGE CODE		G	G	R	F	G	R	F	G	R	F	G	G	G
CAP. CODE	CAP.													
101	100 pF	C	C	C	C									
121	120 pF	C	C	C	C									
151	150 pF	C	C	C	C	C	C	C						
181	180 pF	C	C	C	C	C	C	C						
221	220 pF	C	C	C	C	C	C	C						
271	270 pF	C	C	C	C	C	C	C	C	C	C			
331	330 pF	C	C	C	C	C	C	C	C	C	C			
391	390 pF	C	C	C	C	C	C	C	C	C	C			
471	470 pF	C	C	C	C	C	C	C	C	C	C			
561	560 pF	C	C	C	C	C	C	C	C	C	C			
681	680 pF	C	C	C	C	C	C	C	C	C	C			
751	750 pF	C	C	C	C	C	C	C	C	C	C			
821	820 pF	C	C	C	C	C	C	C	C	C	C			
102	1.0 nF	C	C	C	C	C	C	C	C	C	C	F	F	F
122	1.2 nF	C	C	G	C	C			C	C	C	F	F	F
152	1.5 nF					C			C	C	C	F	F	F
182	1.8 nF					C			C	C	C	F	F	F
222	2.2 nF											F		
272	2.7 nF											F		
332	3.3 nF											F		
392	3.9 nF											F		
472	4.7 nF											F		
562	5.6 nF											F		
682	6.8 nF											F		
822	8.2 nF											F		
103	10 nF											F		
123	12 nF											F		
153	15 nF											F		
183	18 nF											F		
223	22 nF											F		
273	27 nF											F		
333	33 nF											F		
393	39 nF											F		
473	47 nF											F		
563	56 nF											F		
683	68 nF											F		
823	82 nF											F		
104	100 nF											G		

For technical questions, contact: mlcc@vishay.com
THIS DOCUMENT IS SUBJECT TO CHANGE WITHOUT NOTICE. THE PRODUCTS DESCRIBED HEREIN AND THIS DOCUMENT ARE SUBJECT TO SPECIFIC DISCLAIMERS, SET FORTH AT www.vishay.com/doc?91000

SELECTION CHART: POLYMER TERMINATION (B)

DIELECTRIC		C0G (NP0)															
STYLE		VJ1206					VJ1210					VJ1808					
SIZE CODE		1206					1210					1808					
VOLTAGE (V_{DC})		500	630	1000	1500	2000	500	630	1000	1500	2000	500	630	1000	1500	2000	3000
VOLTAGE CODE		E	L	G	R	F	E	L	G	R	F	E	L	G	R	F	H
CAP. CODE	CAP.																
1R0	1.0 pF																
1R2	1.2 pF	X															
1R5	1.5 pF	X	X	X	X	X											
1R8	1.8 pF	X	X	X	X	X											
2R2	2.2 pF	X	X	X	X	X						C	C	C	C	C	C
2R7	2.7 pF	X	X	X	X	X						C	C	C	C	C	C
3R3	3.3 pF	X	X	X	X	X						C	C	C	C	C	C
3R9	3.9 pF	X	X	X	X	X						C	C	C	C	C	C
4R7	4.7 pF	X	X	X	X	X						C	C	C	C	C	C
5R0	5.0 pF	X	X	X	X	X						C	C	C	C	C	C
5R6	5.6 pF	X	X	X	X	X						C	C	C	C	C	C
6R8	6.8 pF	X	X	X	X	X						C	C	C	C	C	C
8R2	8.2 pF	X	X	X	X	X						C	C	C	C	C	C
100	10 pF	X	X	X	X	X	M	M	M	M	M	C	C	C	C	C	C
120	12 pF	X	X	X	X	X	M	M	M	M	M	C	C	C	C	C	C
150	15 pF	X	X	X	X	X	M	M	M	M	M	C	C	C	C	C	C
180	18 pF	X	X	X	X	X	M	M	M	M	M	C	C	C	C	C	C
220	22 pF	X	X	X	X	X	M	M	M	M	M	C	C	C	C	C	C
270	27 pF	X	X	X	X	X	M	M	M	M	M	C	C	C	C	C	C
330	33 pF	X	X	X	M	M	M	M	M	M	M	C	C	C	C	C	C
390	39 pF	X	X	X	M	M	M	M	M	M	M	C	C	C	C	C	C
470	47 pF	X	X	M	M	M	M	M	M	M	M	C	C	C	C	C	C
560	56 pF	X	X	M	C	C	M	M	M	C	C	C	C	C	C	C	C
680	68 pF	X	X	M	C	C	M	M	M	C	C	C	C	C	C	C	C
820	82 pF	X	X	C	C	C	M	M	M	C	C	C	C	C	C	C	C
101	100 pF	X	X	C	C	C	M	M	C	C	C	C	C	C	C	C	F
121	120 pF	X	X	C	E	E	M	M	C	C	C	C	C	C	C	C	F
151	150 pF	X	X	C	E	E	M	M	C	E	E	C	C	C	F	F	F
181	180 pF	X	X	E	E	E	M	M	C	E	E	C	C	C	F	F	F
221	220 pF	X	X	E	E	E	M	M	E	E	E	C	C	C	F	F	F
271	270 pF	M	M	E	P	P	M	M	E	F	F	C	C	F	F	F	F
331	330 pF	M	M	E	P	P	M	M	E	F	F	C	C	F	F	F	F
391	390 pF	M	M	E	P	P	M	M	E	G	G	C	C	F	F	F	F
471	470 pF	M	M	E	E	E	M	M	E	G	G	C	C	F	F	F	F
561	560 pF	C	C	E			M	M	E	G	G	C	C	F	F	F	
681	680 pF	C	C	E			M	M	E	G	G	C	C	F	F	F	
821	820 pF	E	E	E			M	M	E	G	G	C	C	F	F	F	
102	1.0 nF	E	E	E			C	C	E	G	G	C	C	F	F	F	
122	1.2 nF	E	E				C	C	E	F	F	C	C	F	F	F	
152	1.5 nF	E	E				C	C	F	G	G	C	C	F	F	F	
182	1.8 nF	E	E				C	C	G	G	G	C	C	F	F	F	
222	2.2 nF	E	E				C	C	G			C	C	F	F	F	
272	2.7 nF	E	E				C	C	G			C	C	F			
332	3.3 nF	E	E				C	C	G			C	C				
392	3.9 nF	E	E				C	C	G								
472	4.7 nF	E	E														
562	5.6 nF	E	E														
682	6.8 nF	E	E														
822	8.2 nF																

For technical questions, contact: mlcc@vishay.com
THIS DOCUMENT IS SUBJECT TO CHANGE WITHOUT NOTICE. THE PRODUCTS DESCRIBED HEREIN AND THIS DOCUMENT ARE SUBJECT TO SPECIFIC DISCLAIMERS, SET FORTH AT www.vishay.com/doc?91000

SELECTION CHART: POLYMER TERMINATION (B)																						
DIELECTRIC		C0G (NP0)																				
STYLE		VJ1812						VJ1825					VJ2220					VJ2225				
SIZE CODE		1812						1825					2220					2225				
VOLTAGE (V_{DC})		500	630	1000	1500	2000	3000	500	630	1000	1500	2000	500	630	1000	1500	2000	500	630	1000	1500	2000
VOLTAGE CODE		E	L	G	R	F	H	E	L	G	R	F	E	L	G	R	F	E	L	G	R	F
CAP. CODE	CAP.																					
1R0	1.0 pF																					
1R2	1.2 pF																					
1R5	1.5 pF																					
1R8	1.8 pF																					
2R2	2.2 pF																					
2R7	2.7 pF																					
3R3	3.3 pF																					
3R9	3.9 pF																					
4R7	4.7 pF																					
5R0	5.0 pF																					
5R6	5.6 pF																					
6R8	6.8 pF																					
8R2	8.2 pF																					
100	10 pF	C	C	C	C	C	C	F	F	F	F	F	F	F	F		F	F	F	F	F	F
120	12 pF	C	C	C	C	C	C	F	F	F	F	F	F	F	F		F	F	F	F	F	F
150	15 pF	C	C	C	C	C	C	F	F	F	F	F	F	F	F	F	F	F	F	F	F	F
180	18 pF	C	C	C	C	C	C	F	F	F	F	F	F	F	F	F	F	F	F	F	F	F
220	22 pF	C	C	C	C	C	C	F	F	F	F	F	F	F	F	F	F	F	F	F	F	F
270	27 pF	C	C	C	C	C	C	F	F	F	F	F	F	F	F	F	F	F	F	F	F	F
330	33 pF	C	C	C	C	C	C	F	F	F	F	F	F	F	F	F	F	F	F	F	F	F
390	39 pF	C	C	C	C	C	C	F	F	F	F	F	F	F	F	F	F	F	F	F	F	F
470	47 pF	C	C	C	C	C	C	F	F	F	F	F	F	F	F	F	F	F	F	F	F	F
560	56 pF	C	C	C	C	C	C	F	F	F	F	F	F	F	F	F	F	F	F	F	F	F
680	68 pF	C	C	C	C	C	C	F	F	F	F	F	F	F	F	F	F	F	F	F	F	F
820	82 pF	C	C	C	C	C	C	F	F	F	F	F	F	F	F	F	F	F	F	F	F	F
101	100 pF	C	C	C	C	C	C	F	F	F	F	F	F	F	F	F	F	F	F	F	F	F
121	120 pF	C	C	C	C	C	C	F	F	F	F	F	F	F	F	F	F	F	F	F	F	F
151	150 pF	C	C	C	C	C	C	F	F	F	F	F	F	F	F	F	F	F	F	F	F	F
181	180 pF	C	C	C	C	C	F	F	F	F	F	F	F	F	F	F	F	F	F	F	F	F
221	220 pF	C	C	C	C	C	F	F	F	F	F	F	F	F	F	F	F	F	F	F	F	F
271	270 pF	C	C	C	F	F	F	F	F	F	F	F	F	F	F	F	F	F	F	F	F	F
331	330 pF	C	C	C	F	F	F	F	F	F	F	F	F	F	F	F	F	F	F	F	F	F
391	390 pF	C	C	C	F	F	F	F	F	F	F	F	F	F	F	F	F	F	F	F	F	F
471	470 pF	C	C	C	F	F	F	F	F	F	F	F	F	F	F	F	F	F	F	F	F	F
561	560 pF	C	C	C	F	F	F	F	F	F	F	F	F	F	F	F	F	F	F	F	F	F
681	680 pF	C	C	C	F	F	F	F	F	F	F	F	F	F	F	F	F	F	F	F	F	F
821	820 pF	C	C	C	F	F	G	F	F	F	F	F	F	F	F	F	F	F	F	F	F	F
102	1.0 nF	C	C	C	F	F	G	F	F	F	F	F	F	F	F	F	F	F	F	F	F	F
122	1.2 nF	C	C	C	F	F		F	F	F	F	F	F	F	F	F	F	F	F	F	F	F
152	1.5 nF	C	C	C	F	F		F	F	F	F	F	F	F	F	F	F	F	F	F	F	F
182	1.8 nF	C	C	F	F	F		F	F	F	F	F	F	F	F	F	F	F	F	F	F	F
222	2.2 nF	C	C	E	F	F		F	F	F	F	F	F	F	F	F	F	F	F	F	F	F
272	2.7 nF	C	C	F	G	G		F	F	F	F	F	F	F	F	F	F	F	F	F	F	F
332	3.3 nF	C	C	F	G	G		F	F	F	F	F	F	F	F	F	F	F	F	F	F	F

For technical questions, contact: mlcc@vishay.com
THIS DOCUMENT IS SUBJECT TO CHANGE WITHOUT NOTICE. THE PRODUCTS DESCRIBED HEREIN AND THIS DOCUMENT ARE SUBJECT TO SPECIFIC DISCLAIMERS, SET FORTH AT www.vishay.com/doc?91000

SELECTION CHART: POLYMER TERMINATION (B)																						
DIELECTRIC		C0G (NP0)																				
STYLE		VJ1812						VJ1825					VJ2220					VJ2225				
SIZE CODE		1812						1825					2220					2225				
VOLTAGE (V_{DC})		500	630	1000	1500	2000	3000	500	630	1000	1500	2000	500	630	1000	1500	2000	500	630	1000	1500	2000
VOLTAGE CODE		E	L	G	R	F	H	E	L	G	R	F	E	L	G	R	F	E	L	G	R	F
CAP. CODE	CAP.																					
392	3.9 nF	C	C	G				F	F	F	F	F	F	F	F	F	F	F	F	F	F	F
472	4.7 nF	C	C	G				F	F	F	F	F	F	F	F	F	F	F	F	F	F	F
562	5.6 nF	C	C	G				F	F	F			F	F	F			F	F	F	F	F
682	6.8 nF	C	C					F	F	F			F	F	F			F	F	F	F	F
822	8.2 nF	C	C					F	F	G			F	F	G			F	F	F	G	G
103	10 nF	C	C					F	F	G			F	F	G			F	F	G	G	G
123	12 nF	E	E					F	F													
153	15 nF	E	E					F	F													
183	18 nF	F	F					F	F													
223	22 nF	F	F					F	F													
273	27 nF																					
333	33 nF																					
393	39 nF																					
473	47 nF																					
563	56 nF																					
683	68 nF																					
823	82 nF																					

For technical questions, contact: mlcc@vishay.com
THIS DOCUMENT IS SUBJECT TO CHANGE WITHOUT NOTICE. THE PRODUCTS DESCRIBED HEREIN AND THIS DOCUMENT ARE SUBJECT TO SPECIFIC DISCLAIMERS, SET FORTH AT www.vishay.com/doc?91000

SELECTION CHART: POLYMER TERMINATION (B)														
DIELECTRIC		X7R												
STYLE		VJ1206			VJ1210					VJ1808				
SIZE CODE		1206			1210					1808				
VOLTAGE (V_{DC})		500	630	1000	500	630	1000	1500	2000	500	630	1000	1500	2000
VOLTAGE CODE		E	L	G	E	L	G	R	F	E	L	G	R	F
CAP. CODE	CAP.													
470	47 pF													
560	56 pF													
680	68 pF													
820	82 pF													
101	100 pF	C	C	C										
121	120 pF	C	C	C										
151	150 pF	C	C	C						C	C	C	C	C
181	180 pF	C	C	C						C	C	C	C	C
221	220 pF	C	C	C	M	M	M	M	M	C	C	C	C	C
271	270 pF	C	C	C	M	M	M	M	M	C	C	C	C	C
331	330 pF	C	C	C	M	M	M	M	M	C	C	C	C	C
391	390 pF	C	C	C	M	M	M	M	M	C	C	C	C	C
471	470 pF	C	C	C	M	M	M	M	M	C	C	C	C	C
561	560 pF	C	C	C	M	M	M	M	M	C	C	C	C	C
681	680 pF	C	C	C	M	M	M	M	M	C	C	C	C	C
751	750 pF	C	C	C	M	M	M	M	M	C	C	C	C	C
821	820 pF	C	C	C	M	M	M			C	C	C	C	C
102	1.0 nF	C	C	C	M	M	M			C	C	C	C	C
122	1.2 nF									C	C	C	C	C
152	1.5 nF									C	C	C	C	C
182	1.8 nF									C	C	C	C	C
222	2.2 nF													
272	2.7 nF													
332	3.3 nF													
392	3.9 nF													
472	4.7 nF													
562	5.6 nF													
682	6.8 nF													
822	8.2 nF													
103	10 nF													

For technical questions, contact: mlcc@vishay.com
THIS DOCUMENT IS SUBJECT TO CHANGE WITHOUT NOTICE. THE PRODUCTS DESCRIBED HEREIN AND THIS DOCUMENT ARE SUBJECT TO SPECIFIC DISCLAIMERS, SET FORTH AT www.vishay.com/doc?91000

SELECTION CHART: POLYMER TERMINATION (B)																
DIELECTRIC		X7R														
STYLE		VJ1812					VJ1825			VJ2220			VJ2225			
SIZE CODE		1812					1825			2220			2225			
VOLTAGE (V_{DC})		500	630	1000	1500	2000	500	630	1000	500	630	1000	500	630	1000	
VOLTAGE CODE		E	L	G	R	F	E	L	G	E	L	G	E	L	G	
CAP. CODE	CAP.															
470	47 pF															
560	56 pF															
680	68 pF															
820	82 pF															
101	100 pF															
121	120 pF															
151	150 pF															
181	180 pF															
221	220 pF															
271	270 pF	C	C	C	C	C										
331	330 pF	C	C	C	C	C										
391	390 pF	C	C	C	C	C										
471	470 pF	C	C	C	C	C										
561	560 pF	C	C	C	C	C										
681	680 pF	C	C	C	C	C										
751	750 pF	C	C	C	C	C										
821	820 pF	C	C	C	C	C										
102	1.0 nF	C	C	C	C	C	F	F	F	F	F	F	F	F	F	
122	1.2 nF	C	C	C	C	C	F	F	F	F	F	F	F	F	F	
152	1.5 nF	C	C	C	C	C	F	F	F	F	F	F	F	F	F	
182	1.8 nF	C	C	C	C	C	F	F	F	F	F	F	F	F	F	
222	2.2 nF						F	F	F							
272	2.7 nF						F	F	F							
332	3.3 nF						F	F	F							
392	3.9 nF						F	F	F							
472	4.7 nF						F	F	F							
562	5.6 nF						F	F	F							
682	6.8 nF						F	F	F							
822	8.2 nF						F	F	F							
103	10 nF						F	F	G							

For technical questions, contact: mlcc@vishay.com
THIS DOCUMENT IS SUBJECT TO CHANGE WITHOUT NOTICE. THE PRODUCTS DESCRIBED HEREIN AND THIS DOCUMENT ARE SUBJECT TO SPECIFIC DISCLAIMERS, SET FORTH AT www.vishay.com/doc?91000

PACKAGING DIMENSIONS AND QUANTITIES

SIZE CODE (inch / mm)	THICKNESS (mm)	THICKNESS SYMBOL	PAPER TAPE		PLASTIC TAPE	
			7" REEL (C)	13" REEL (P)	7" REEL (T)	13" REEL (R)
1206 (3216)	0.80 ± 0.10	X	4000	15 000	-	-
	0.95 ± 0.10	M	-	-	3000	10 000
	1.25 ± 0.10	C	-	-	3000	10 000
	1.60 ± 0.20	E	-	-	2000	-
	1.60 + 0.30 / - 0.10	P	-	-	2000	9000
1210 (3225)	0.95 ± 0.10	M	-	-	3000	10 000
	1.25 ± 0.10	C	-	-	3000	10 000
	1.60 ± 0.20	E	-	-	2000	-
	2.00 ± 0.20	F	-	-	1000	6000
	2.50 ± 0.30	G	-	-	1000	6000
1808 (4520)	1.25 ± 0.10	C	-	-	2000	10 000
	2.00 ± 0.20	F	-	-	1000	6000
1812 (4532)	1.25 ± 0.10	C	-	-	1000	5000
	2.00 ± 0.20	F	-	-	1000	-
	2.50 ± 0.30	G	-	-	500	3000
1825 (4563)	2.00 ± 0.20	F	-	-	1000	-
	2.50 ± 0.30	G	-	-	500	-
2220 (5750)	2.00 ± 0.20	F	-	-	1000	-
	2.50 ± 0.30	G	-	-	500	-
2225 (5763)	2.00 ± 0.20	F	-	-	1000	-
	2.50 ± 0.30	G	-	-	500	-

TAPE AND REEL SPECIFICATIONS

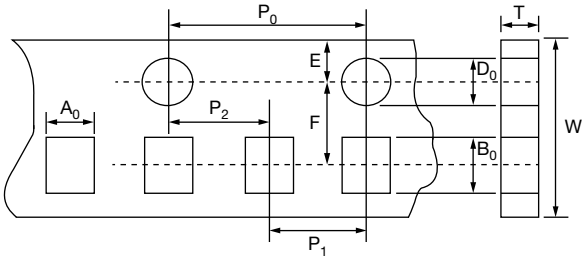

Dimensions of paper tape

DIMENSIONS PAPER TAPE in millimeters	
SIZE CODE	1206
THICKNESS	X
A_0	2.00 ± 0.10
B_0	3.50 ± 0.50
T	0.95 ± 0.05
W	8.00 ± 0.10
P_0	4.00 ± 0.10
10 x P_0	40.00 ± 0.20
P_1	4.00 ± 0.10
P_2	2.00 ± 0.05
D_0	1.50 + 0.10 / - 0.0
E	1.75 ± 0.10
F	3.50 ± 0.05

For technical questions, contact: mlcc@vishay.com
THIS DOCUMENT IS SUBJECT TO CHANGE WITHOUT NOTICE. THE PRODUCTS DESCRIBED HEREIN AND THIS DOCUMENT ARE SUBJECT TO SPECIFIC DISCLAIMERS, SET FORTH AT www.vishay.com/doc?91000

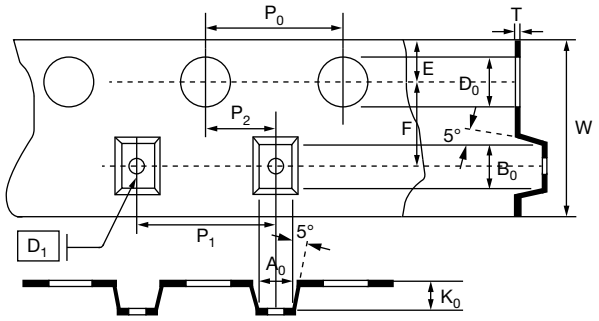

Dimensions of plastic tape

DIMENSIONS PLASTIC TAPE in millimeters								
SIZE CODE	1206		1210		1808		1812	
THICKNESS	M, C	E, P	M, C, E	F, G	C, E	F	C, E, F	G
A_0	< 2.00	< 2.50	< 3.05	< 3.20	< 2.50	< 2.50	< 3.90	< 3.90
B_0	< 3.70	< 4.00	< 3.80	< 4.00	< 5.30	< 5.30	< 5.30	< 5.30
T	0.23 ± 0.05	0.23 ± 0.05	0.23 ± 0.05	0.23 ± 0.05	0.25 ± 0.05	0.25 ± 0.05	0.25 ± 0.05	0.25 ± 0.05
K	< 2.50	< 2.50	< 2.50	< 3.50	< 2.50	< 2.50	< 2.50	< 3.50
W	8.00 ± 0.10	8.00 ± 0.10	8.00 ± 0.10	8.00 ± 0.10	12.00 ± 0.20	12.00 ± 0.20	12.00 ± 0.20	12.00 ± 0.20
P_0	4.00 ± 0.10	4.00 ± 0.10	4.00 ± 0.10	4.00 ± 0.10	4.00 ± 0.10	4.00 ± 0.10	4.00 ± 0.10	4.00 ± 0.10
10 x P_0	40.00 ± 0.20	40.00 ± 0.20	40.00 ± 0.20	40.00 ± 0.20	40.00 ± 0.20	40.00 ± 0.20	40.00 ± 0.20	40.00 ± 0.20
P_1	4.00 ± 0.10	4.00 ± 0.10	4.00 ± 0.10	4.00 ± 0.10	4.00 ± 0.10	4.00 ± 0.10	8.00 ± 0.10	8.00 ± 0.10
P_2	2.00 ± 0.05	2.00 ± 0.05	2.00 ± 0.05	2.00 ± 0.05	2.00 ± 0.05	2.00 ± 0.05	2.00 ± 0.05	2.00 ± 0.05
D_0	1.50 + 0.10/- 0	1.50 + 0.10/- 0	1.50 + 0.10/- 0	1.50 + 0.10/- 0	1.50 + 0.10/- 0	1.50 + 0.10/- 0	1.50 + 0.10/- 0	1.50 + 0.10/- 0
D_1	1.00 ± 0.10	1.50 ± 0.10	1.50 ± 0.10	1.00 ± 0.10	1.50 ± 0.10	1.50 ± 0.10	1.50 ± 0.10	1.50 ± 0.10
E	1.75 ± 0.10	1.75 ± 0.10	1.75 ± 0.10	1.75 ± 0.10	1.75 ± 0.10	1.75 ± 0.10	1.75 ± 0.10	1.75 ± 0.10
F	3.50 ± 0.05	5.50 ± 0.05	5.50 ± 0.05	3.50 ± 0.05	5.50 ± 0.05	5.50 ± 0.05	5.50 ± 0.05	5.50 ± 0.05

DIMENSIONS PLASTIC TAPE in millimeters						
SIZE CODE	1825		2220		2225	
THICKNESS	F	G, H	F	G, H	F	G, H
A_0	< 6.80	< 6.80	< 5.80	< 6.80	< 6.80	< 6.80
B_0	< 5.30	< 5.30	< 6.50	< 6.50	< 6.50	< 6.50
T	0.30 ± 0.10	0.30 ± 0.10	0.30 ± 0.10	0.30 ± 0.10	0.30 ± 0.10	0.30 ± 0.10
K	< 2.50	< 3.10	< 2.50	< 3.10	< 2.50	< 3.10
W	12.00 ± 0.20	12.00 ± 0.20	12.00 ± 0.20	12.00 ± 0.20	12.00 ± 0.20	12.00 ± 0.20
P_0	4.00 ± 0.10	4.00 ± 0.10	4.00 ± 0.10	4.00 ± 0.10	4.00 ± 0.10	4.00 ± 0.10
10 x P_0	40.00 ± 0.20	40.00 ± 0.20	40.00 ± 0.20	40.00 ± 0.20	40.00 ± 0.20	40.00 ± 0.20
P_1	8.00 ± 0.10	8.00 ± 0.10	8.00 ± 0.10	8.00 ± 0.10	8.00 ± 0.10	8.00 ± 0.10
P_2	2.00 ± 0.05	2.00 ± 0.05	2.00 ± 0.05	2.00 ± 0.05	2.00 ± 0.05	2.00 ± 0.05
D_0	1.50 + 0.10/- 0	1.50 + 0.10/- 0	1.50 + 0.10/- 0	1.50 + 0.10/- 0	1.50 + 0.10/- 0	1.50 + 0.10/- 0
D_1	1.50 ± 0.10	1.50 ± 0.10	1.50 ± 0.10	1.50 ± 0.10	1.50 ± 0.10	1.50 ± 0.10
E	1.75 ± 0.10	1.75 ± 0.10	1.75 ± 0.10	1.75 ± 0.10	1.75 ± 0.10	1.75 ± 0.10
F	5.50 ± 0.05	5.50 ± 0.05	5.50 ± 0.05	5.50 ± 0.05	5.50 ± 0.05	5.50 ± 0.05

For technical questions, contact: mlcc@vishay.com
THIS DOCUMENT IS SUBJECT TO CHANGE WITHOUT NOTICE. THE PRODUCTS DESCRIBED HEREIN AND THIS DOCUMENT ARE SUBJECT TO SPECIFIC DISCLAIMERS, SET FORTH AT www.vishay.com/doc?91000

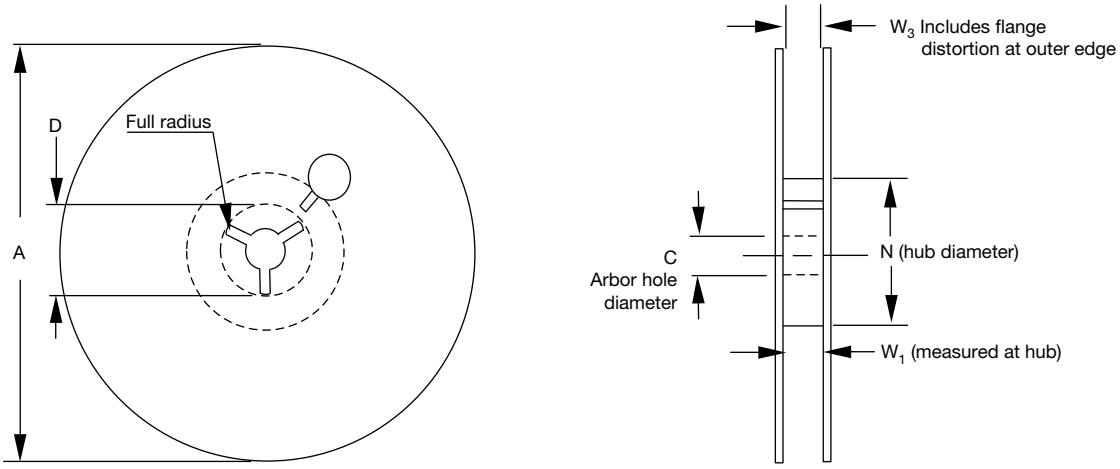

REEL DIMENSIONS in millimeters				
SIZE CODE	**1206, 1210**	**1206, 1210**	**1808, 1812, 1825, 2220, 2225**	**1808, 1812 ONLY**
REEL SIZE	**7"**	**13"**	**7"**	**13"**
$A_{max.}$	178	330	178	330
$D_{min.}$	20.2	20.2	20.2	20.2
C	13.0 + 0.5/- 0.2	13.0 + 0.7/- 0.3	13.0 + 0.5/- 0.2	13.0 + 0.7/- 0.3
$N_{min.}$	60	100	60	100
W_1	8.4 ± 1.5	8.4 ± 1.5	12.4 + 2.0/+ 0.0	12.4 + 2.0/+ 0.0
W_3	Shall accommodate tape width without interference			

RELIABILITY TEST CONDITIONS AND REQUIREMENTS			
NO.	**ITEM**	**TEST CONDITION**	**REQUIREMENTS**
1.	Visual and dimensions		No remarkable defects Dimensions to confirm to individual specification sheet
2.	Capacitance	Class I: C0G (NP0) Cap. ≤ 1000 pF, 1.0 ± 0.2 V_{RMS}, 1 MHz ± 10 % Cap. > 1000 pF, 1.0 ± 0.2 V_{RMS}, 1 kHz ± 10 % Class II: X7R 1.0 ± 0.2 V_{RMS}, 1 kHz ± 10 %	Shall not exceed the limits given in the detailed spec. Class I: C0G (NP0) Cap. ≥ 30 pF, Q ≥ 1000 Cap. < 30 pF, Q ≥ 400 + 20C Class II: X7R D.F. ≤ 2.5 %
3.	Q/D.F. (tangent of loss angle)		
4.	Temperature coefficient of capacitance (TCC)	With no electrical load. Operating temperature -55 °C to +125 °C at 25 °C	C0G (NP0): 0 ± 30 ppm/°C X7R: ± 15 %
5.	Insulation resistance	Rated voltage > 500 V, applied voltage 500 V_{DC}, test condition 60 s	C0G (NP0): ≥ 10 GΩ or R x C ≥ 500 ΩF, whichever is smaller X7R:≥ 10 GΩ or R x C ≥ 100 ΩF, whichever is smaller
6.	Solderability	Solder temperature: 235 °C ± 5 °C for (1206 to 1210) Solder temperature: 245 °C ± 5 °C for (1808 to 2225) Dipping time: 2 s ± 0.5 s	75 % min. coverage of all metalized area

For technical questions, contact: mlcc@vishay.com
THIS DOCUMENT IS SUBJECT TO CHANGE WITHOUT NOTICE. THE PRODUCTS DESCRIBED HEREIN AND THIS DOCUMENT ARE SUBJECT TO SPECIFIC DISCLAIMERS, SET FORTH AT www.vishay.com/doc?91000

RELIABILITY TEST CONDITIONS AND REQUIREMENTS

NO.	ITEM	TEST CONDITION	REQUIREMENTS
7.	Dielectric strength (voltage proof)	630 ≤ V ≤ 3000 V, 1.2 x U_R > 3000 V, 1.1 x U_R Duration 1 s to 5 s Voltage ramp-up rate ≤ 500 V_{DC}/s Charge and discharge current less than 50 mA. Test in insulating fluid.	No evidence of damage or flashover during test.
8.	Resistance to soldering heat	Solder temperature: 260 °C ± 5 °C. Dipping time: 10 s ± 1 s Preheating: 120 °C to 150 °C for 1 min before immersing the capacitor in a eutectic solder. Before initial measurement (Class II only): perform heat treatment at 150 °C + 0 °C/- 10 °C for 1 h and then set for 48 h ± 4 h at room temp. Measurement to be made after keeping at room temp. for 24 h ± 2 h (Class I) or 48 h ± 4 h (Class II).	No remarkable damage. Cap. change: C0G: within ± 2.5 % or ± 0.25 pF, whichever is larger X7R: within ± 7.5 %. Q/D.F. and I.R.: to meet the initial requirement 25 % max. leaching on each edge.
9.	Temperature cycle	Conduct the five cycles according to below temperatures and times: Step 1 - min. operating temp. + 0/- 3 °C, 30 ± 3 mins. Step 2 - room temp., 2 to 3 mins. Step 3 - max. operating temp. + 3/- 0 °C, 30 ± 3 mins. Step 4 - room temp., 2 to 3 mins. Before initial measurement (Class II only): perform heat treatment at 150 °C + 0 °C/- 10 °C for 1 h and then set for 48 h ± 4 h at room temp. Measurement to be made after keeping at room temp. for 24 h ± 2 h (Class I) or 48 h ± 4 h (Class II).	No remarkable damage. Cap. change: C0G: within ± 2.5 % or ± 0.25 pF, whichever is larger X7R: within ± 7.5 %. Q/D.F.: C0G: to meet the initial requirement X7R: D.F. ≤ 150 % of initial requirement I.R.: to meet the initial requirement
10.	Humidity (damp heat) steady state	Test temp.: 40 °C ± 2 °C. Humidity: 90 % to 95 % RH. Test time: 500 h + 24 h/- 0 h Before initial measurement (Class II only): perform heat treatment at 150 °C + 0 °C / - 10 °C for 1 h and then set for 48 h ± 4 h at room temperature. Measurement to be made after keeping at room temp. for 24 h ± 2 h (Class I) or 48 h ± 4 h (Class II).	No remarkable damage. Cap. change: C0G: within ± 5.0 % or ± 0.5 pF, whichever is larger X7R: within ± 12.5 % Q/D.F.: C0G: Cap. > 30 pF, Q ≥ 350; 10 pF ≤ Cap. ≤ 30 pF, Q ≥ 275 + 2.5 C; Cap. < 10 pF, Q ≥ 200 + 10 C X7R: D.F. ≤ 200 % of initial requirement I.R.: (Class I): ≥ 1 GΩ or R x C ≥ 50 ΩF, whichever is smaller. (Class II): ≥ 1 GΩ or R x C ≥ 10 ΩF, whichever is smaller.
11.	Humidity (damp heat) load	Test temp.: 40 °C ± 2 °C. Humidity: 90 % to 95 % RH. Test time: 500 h + 24 h/- 0 h Applied voltage: 500 V_{DC}. Before initial measurement (Class II only): perform heat treatment at 150 °C + 0 °C / - 10 °C for 1 h and then set for 48 h ± 4 h at room temperature. Measurement to be made after keeping at room temp. for 24 h ± 2 h (Class I) or 48 h ± 4 h (Class II).	No remarkable damage. Cap. change: C0G: within ± 7.5 % or ± 0.75 pF, whichever is larger. X7R: within ± 12.5 %. Q/D.F.: C0G: Cap. ≥ 30 pF, Q ≥ 200; Cap. < 30 pF, Q ≥ 100 + 10/3C. X7R: D.F. ≤ 200 % of initial requirement. I.R.: ≥ 500 MΩ or R x C ≥ 25 ΩF, whichever is smaller.

For technical questions, contact: mlcc@vishay.com
THIS DOCUMENT IS SUBJECT TO CHANGE WITHOUT NOTICE. THE PRODUCTS DESCRIBED HEREIN AND THIS DOCUMENT ARE SUBJECT TO SPECIFIC DISCLAIMERS, SET FORTH AT www.vishay.com/doc?91000

RELIABILITY TEST CONDITIONS AND REQUIREMENTS

NO.	ITEM	TEST CONDITION	REQUIREMENTS
12.	High temperature load (endurance)	Test temp.: 125 °C ± 3 °C. Apply voltage: 1.2 x rated voltage. Test time: 2000 h + 24 h/- 0 h Before initial measurement (Class II only): perform heat treatment at 150 °C + 0 °C / -10 °C for 1 h and then set for 48 h ± 4 h at room temperature. Measurement to be made after keeping at room temp. for 24 h ± 2 h (Class I) or 48 h ± 4 h (Class II).	No remarkable damage. Cap. change: C0G: within ± 3.0 % or ± 0.3 pF, whichever is larger X7R: within ± 10 % Q/D.F.: C0G: Cap. > 30 pF, Q ≥ 350; 10 pF ≤ Cap. ≤ 30 pF, Q ≥ 275 + 2.5C; Cap. < 10 pF, Q ≥ 200 + 10C X7R: D.F. ≤ 200 % of initial requirement I.R.: (Class I): ≥ 1 GΩ or R x C ≥ 50 ΩF, whichever is smaller. (Class II): ≥ 1 GΩ or R x C ≥ 10 ΩF, whichever is smaller.

13.	Resistance to flexure of substrate (substrate bending test)	The middle part of substrate shall be pressurized by means of the pressurizing rod at a rate of about.
		1 mm per second until the deflection (X) becomes:
		- Sn termination: 1 mm
		- Polymer termination:
		  - 5 mm for product size < 1808
		  - 3 mm for product size ≥ 1808
		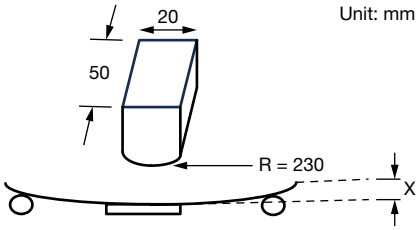
			No remarkable damage.
			
			Cap. change:
			C0G:
			Sn termination within ± 3.0 % or ± 2.0 pF, whichever is larger.
			Polymer termination within ± 5 % or ± 0.5 pF, whichever is larger.
			X7R: within ± 12.5 %.
			
			(This capacitance change means the change of capacitance under specified flexure of substrate from the capacitance measured before the test)

14.	Adhesive strength of termination (robustness of termination)	Capacitors mounted on a substrate. A force of 10 N applied perpendicular to the place of substrate and parallel the line joining the center of terminations for 10 s ± 1 s. 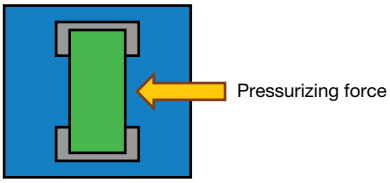	No remarkable damage or removal of the terminations.

For technical questions, contact: mlcc@vishay.com
THIS DOCUMENT IS SUBJECT TO CHANGE WITHOUT NOTICE. THE PRODUCTS DESCRIBED HEREIN AND THIS DOCUMENT ARE SUBJECT TO SPECIFIC DISCLAIMERS, SET FORTH AT www.vishay.com/doc?91000

APPLICATION NOTES

1. Storage

- Store products at 5 °C to 40 °C ambient temperature and 20 % to 70 % relative humidity conditions.
- The product is recommended to be used within one year after shipment. Check solderability in case shelf-life extension is needed.
- Corrosive gas reacts with the terminal electrodes of capacitors and results in poor solderability. Do not store the capacitors in the ambience of corrosive gas (e.g. hydrogen sulfide, sulfur dioxide, chlorine, ammonia gas, etc.).
- Packaging should not be opened until the capacitors are required for use. If opened, the pack should be re-sealed as soon as is practicable. Taped product should be stored out of direct sunlight, which might promote deterioration in tape or adhesion performance.

2. Handling

Chip capacitors are dense, hard, brittle, and abrasive materials; they are liable to suffer mechanical damage in the form of cracks or chips. Chip capacitors should be handled with care to avoid contamination or damage. Using vacuum or plastic tweezers is recommended for manual placement. Tape and reeled packages are suitable for automatic pick and placement machines.

3. Preheat

In order to minimize the risk of thermal shock during soldering, a carefully controlled preheat is required. The rate of preheat should not exceed 3 °C per second.

4. Soldering

Use mildly activated rosin fluxes do not use activated flux. The amount of solder in each solder joint should be controlled to prevent the damage of chip capacitors caused by the stress between solder, chips, and substrate.

a) Hand soldering

Attachment by soldering iron is not recommended. A heat shock may cause a crack in the MLCC chip capacitors; however, if solder iron is used, the following precautions should be taken:

- Soldering iron tip diameter ≤ 1.0 mm and use a low wattage, temperature-controlled iron.
- Preheat the chip capacitor to +150 °C minimum. Use hot plate or hot air flow for preheat.
- The required amount of solder shall be melted on the soldering tip.
- Tip temperature setting ≤ 280 °C and a maximum soldering time of 5 s.
- The tip of iron should not contact the ceramic body directly
- The capacitors shall be cooled gradually at room temperature after soldering
- Forced air cooling is not allowed
- When removal of chip capacitor is necessary, a hot air pencil is the preferred tool

b) Reflow soldering

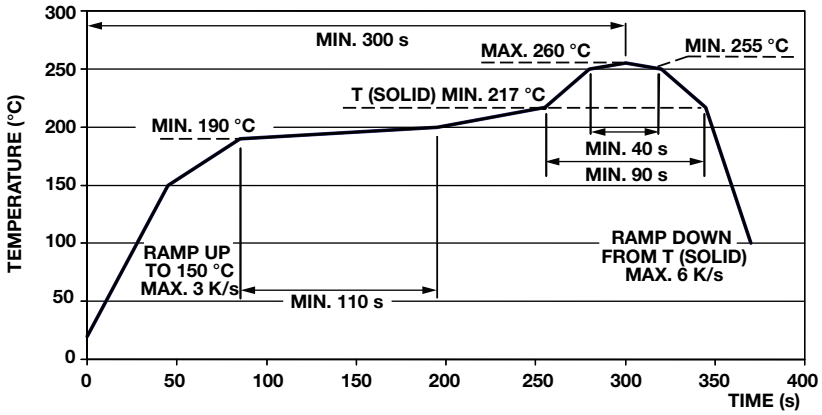

5. Cool Down

After soldering, allow the chip to cool at room ambient conditions. Using forced cool air or refrigerated air for expediting the cooling process is not recommended and can create thermal shock cracks and may facilitate board bend stresses.

THIS DOCUMENT IS SUBJECT TO CHANGE WITHOUT NOTICE. THE PRODUCTS DESCRIBED HEREIN AND THIS DOCUMENT ARE SUBJECT TO SPECIFIC DISCLAIMERS, SET FORTH AT www.vishay.com/doc?91000

6. Cleaning

Selection of an appropriate cleaning solvent is dependent upon the type of flux used. Cleaning in alcohol, water, hydrocarbons or any of the common, halogenated degreaser solvents are not detrimental to Vishay chip capacitors.

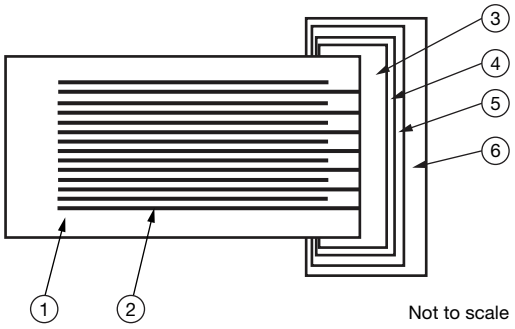

CONSTRUCTION				
NO.	**NAME**		**C0G (NP0)**	**X7R**
1	Ceramic material		$CaZrO_3$ based	$BaTiO_3$ based
2	Inner electrode		Ni	
3	Termination	Inner layer	Cu	
4		Polymer layer	B termination only	
5		Middle layer	Ni	
6		Outer layer	Sn (matte)	

For technical questions, contact: mlcc@vishay.com
THIS DOCUMENT IS SUBJECT TO CHANGE WITHOUT NOTICE. THE PRODUCTS DESCRIBED HEREIN AND THIS DOCUMENT ARE SUBJECT TO SPECIFIC DISCLAIMERS, SET FORTH AT www.vishay.com/doc?91000

Disclaimer

ALL PRODUCT, PRODUCT SPECIFICATIONS AND DATA ARE SUBJECT TO CHANGE WITHOUT NOTICE TO IMPROVE RELIABILITY, FUNCTION OR DESIGN OR OTHERWISE.

Vishay Intertechnology, Inc., its affiliates, agents, and employees, and all persons acting on its or their behalf (collectively, “Vishay”), disclaim any and all liability for any errors, inaccuracies or incompleteness contained in any datasheet or in any other disclosure relating to any product.

Vishay makes no warranty, representation or guarantee regarding the suitability of the products for any particular purpose or the continuing production of any product. To the maximum extent permitted by applicable law, Vishay disclaims (i) any and all liability arising out of the application or use of any product, (ii) any and all liability, including without limitation special, consequential or incidental damages, and (iii) any and all implied warranties, including warranties of fitness for particular purpose, non-infringement and merchantability.

Statements regarding the suitability of products for certain types of applications are based on Vishay's knowledge of typical requirements that are often placed on Vishay products in generic applications. Such statements are not binding statements about the suitability of products for a particular application. It is the customer's responsibility to validate that a particular product with the properties described in the product specification is suitable for use in a particular application. Parameters provided in datasheets and / or specifications may vary in different applications and performance may vary over time. All operating parameters, including typical parameters, must be validated for each customer application by the customer's technical experts. Product specifications do not expand or otherwise modify Vishay's terms and conditions of purchase, including but not limited to the warranty expressed therein.

Hyperlinks included in this datasheet may direct users to third-party websites. These links are provided as a convenience and for informational purposes only. Inclusion of these hyperlinks does not constitute an endorsement or an approval by Vishay of any of the products, services or opinions of the corporation, organization or individual associated with the third-party website. Vishay disclaims any and all liability and bears no responsibility for the accuracy, legality or content of the third-party website or for that of subsequent links.

Vishay products are not designed for use in life-saving or life-sustaining applications or any application in which the failure of the Vishay product could result in personal injury or death unless specifically qualified in writing by Vishay. Customers using or selling Vishay products not expressly indicated for use in such applications do so at their own risk. Please contact authorized Vishay personnel to obtain written terms and conditions regarding products designed for such applications.

No license, express or implied, by estoppel or otherwise, to any intellectual property rights is granted by this document or by any conduct of Vishay. Product names and markings noted herein may be trademarks of their respective owners.

© 2026 VISHAY INTERTECHNOLOGY, INC. ALL RIGHTS RESERVED

THIS DOCUMENT IS SUBJECT TO CHANGE WITHOUT NOTICE. THE PRODUCTS DESCRIBED HEREIN AND THIS DOCUMENT ARE SUBJECT TO SPECIFIC DISCLAIMERS, SET FORTH AT www.vishay.com/doc?91000