CUI Devices is now Same Sky! Learn More

MODEL: UJ32-C-V-G-TH-5-P24-TR | DESCRIPTION: USB RECEPTACLE

FEATURES

- USB Type C receptacle
- USB 3.2 Gen 1
- 5 Gbit/s data transfer speed
- reflow solder compatible
- tape & reel packaging



RoHS

SPECIFICATIONS

parameter	conditions/description	min	typ	max	units
USB standard	USB 3.2 Gen 1				
rated input voltage				48	Vdc
rated input current	as per EIA-364-70, Method B power pins collectively (A1, A4, A9, A12, B1, B4, B9, B12) VCONN pins individually (A5, B5) all other signal pins individually			 5.0 1.25 0.25	 A A A
contact resistance[1]	between terminals and mating plug			40	mΩ
insulation resistance	at 100 Vdc between adjacent contacts	100			MΩ
voltage withstand	between adjacent contacts for 1 minute	100			Vac
insertion force	at a rate of 30 cycles/min	5		20	N
withdrawal force	at a rate of 30 cycles/min	8		20	N
life	at a rate of 500 cycles per hour		10,000		cycles
operating temperature		-25		85	°C
flammability rating	UL94V-0				
RoHS	yes				

Note: 1. When measured at 20 mV / 100 mA.

SOLDERABILITY

parameter	conditions/description	min	typ	max	units
reel storage	at 20~30°C, 40~75% humidity				
reflow soldering	see reflow profile			260	°C

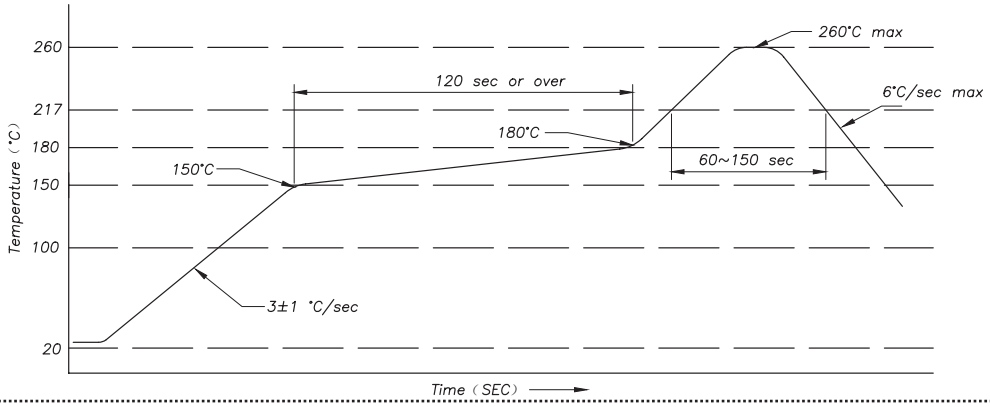

MECHANICAL DRAWING

units: mm
tolerance:
X.X ±0.30 mm
X.XX ±0.20 mm
X.XXX ±0.10 mm
unless otherwise specified

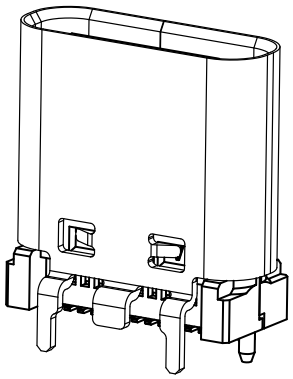

DESCRIPTION	MATERIAL	PLATING/COLOR
housing	PA9T (UL94V-0)	black
contact	C1814	contact area: 3 µ" gold over 50 µ solder area: 80 µ" tin over 50 µ" nickel
mid plate	stainless steel	50 µ" nickel
front shell	stainless steel	30 µ" nickel
EMI plate	stainless steel	clear

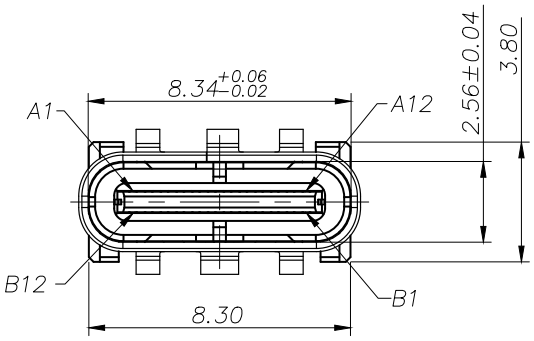

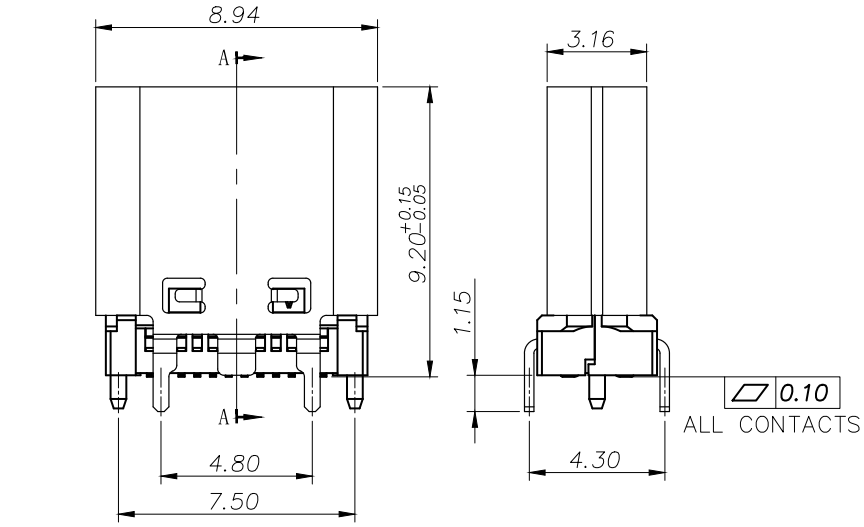

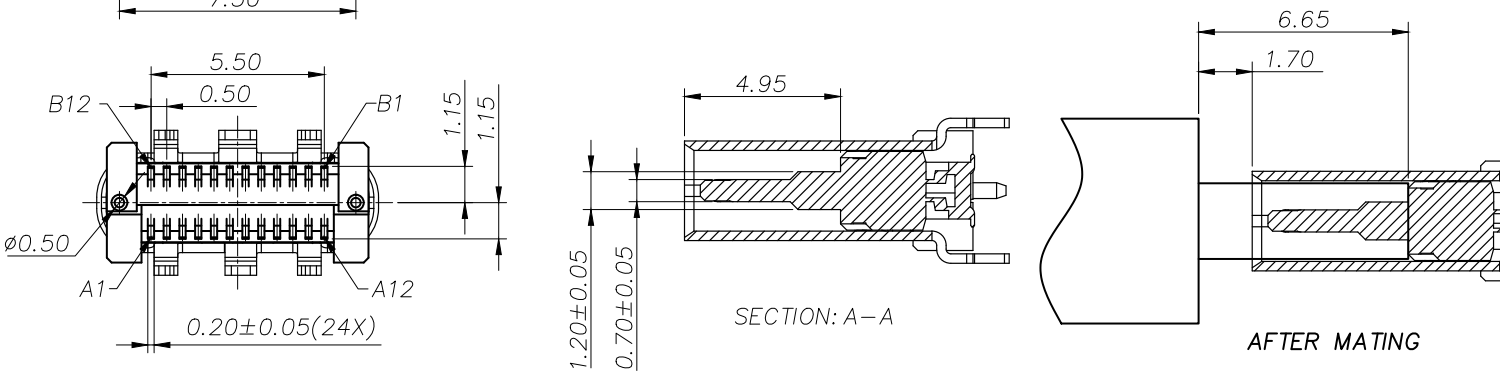

MECHANICAL DRAWING (CONTINUED)

units: mm
PCB tolerance: ±0.05 mm
PCB thickness: 1.0 mm

PIN CONNECTIONS			
PIN	SIGNAL NAME	PIN	SIGNAL NAME
A1	GND	B12	GND
A2	SSTXp1	B11	SSRXp1
A3	SSTXn1	B10	SSRXn1
A4	VBUS	B9	VBUS
A5	CC1	B8	SBU2
A6	Dp1	B7	Dn2
A7	Dn1	B6	Dp2
A8	SBU1	B5	CC2
A9	VBUS	B4	VBUS
A10	SSRXn2	B3	SSTXn2
A11	SSRXp2	B2	SSTXp2
A12	GND	B1	GND

with cover:

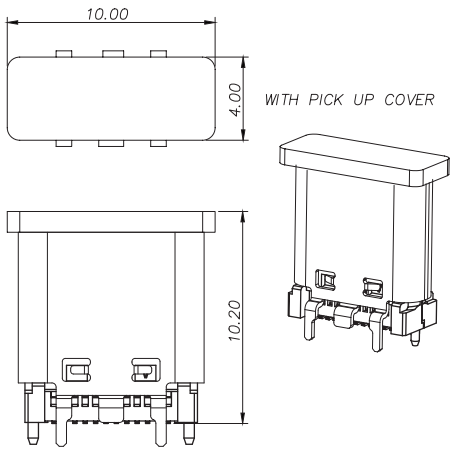

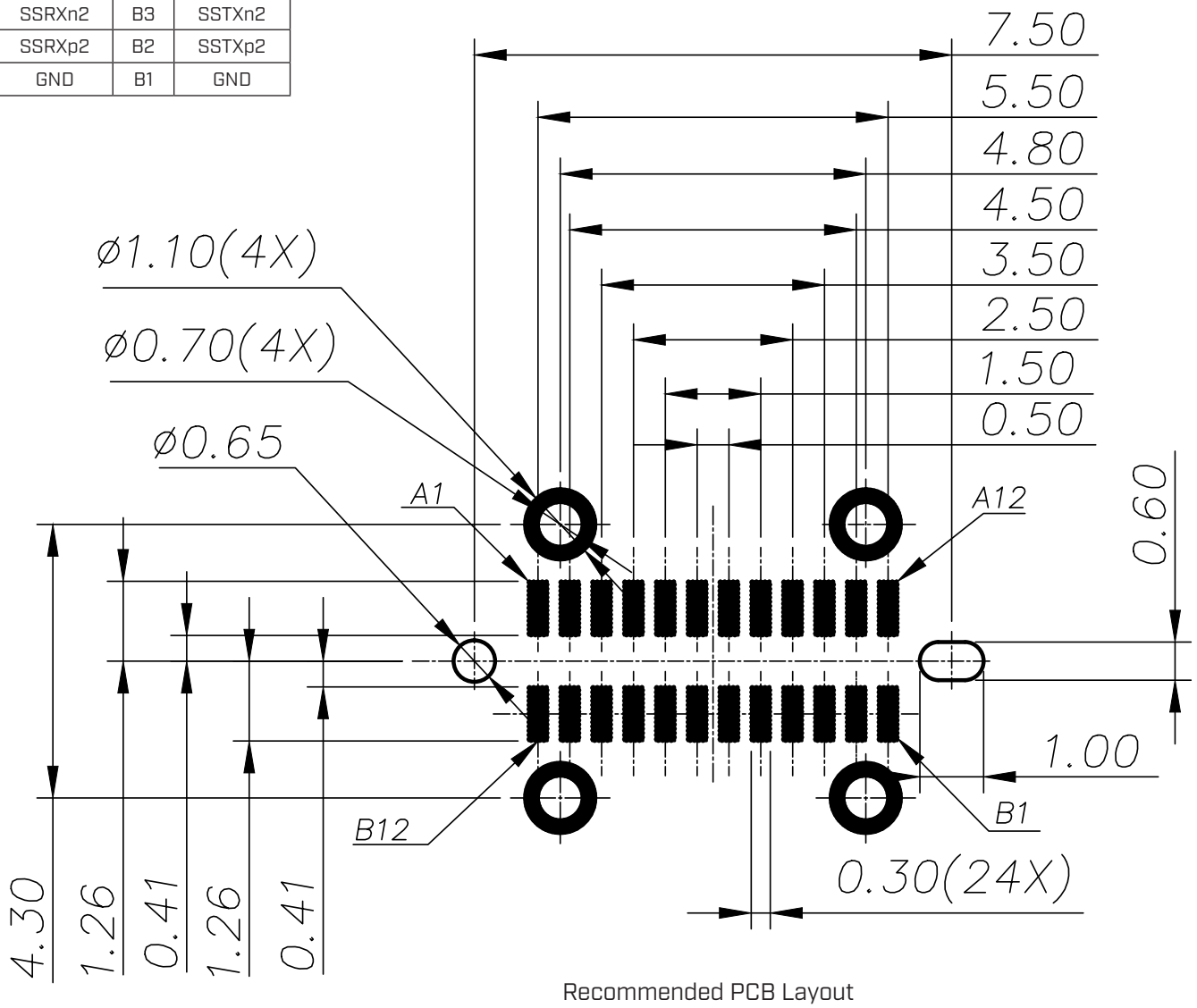

Recommended PCB Layout
Top View

PACKAGING

units: mm

Reel Size: Ø380 mm
Reel QTY: 450 pcs per reel
Carton Size: 400 x 400 x 320 mm
Carton QTY: 4,500 pcs

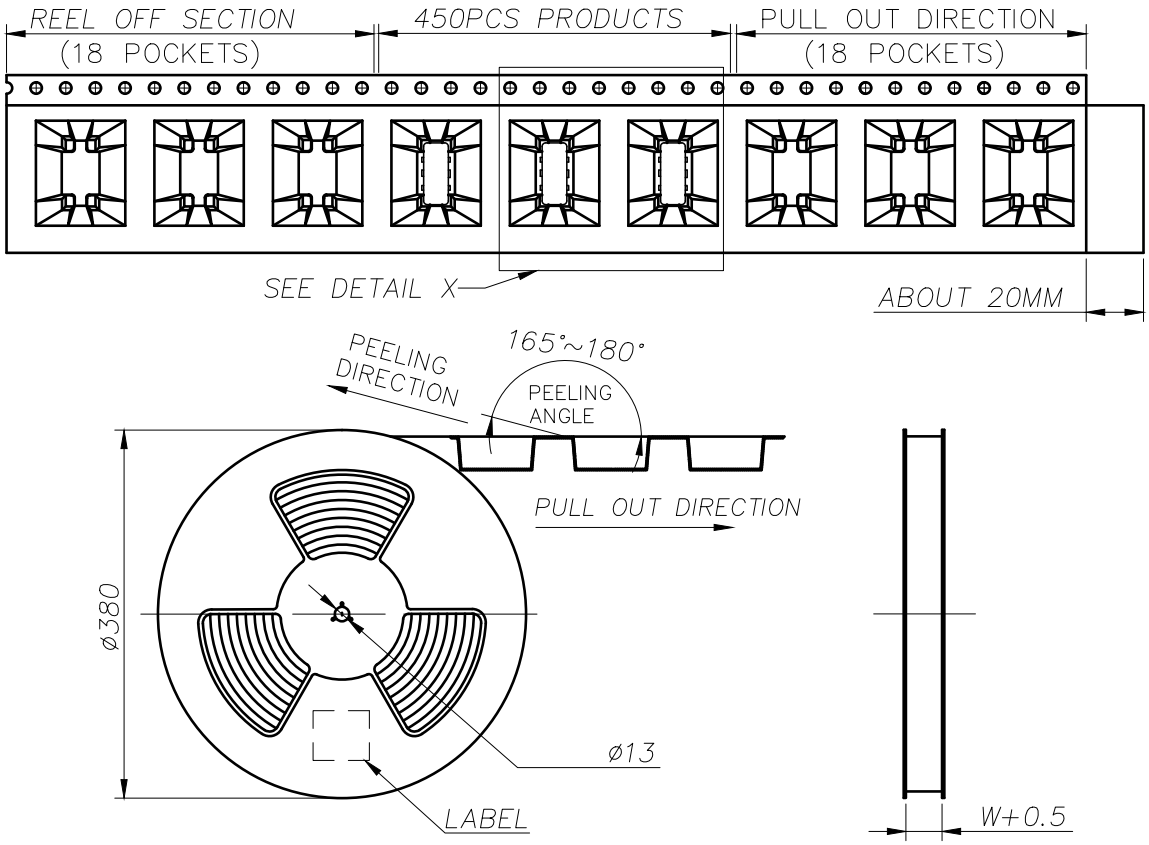

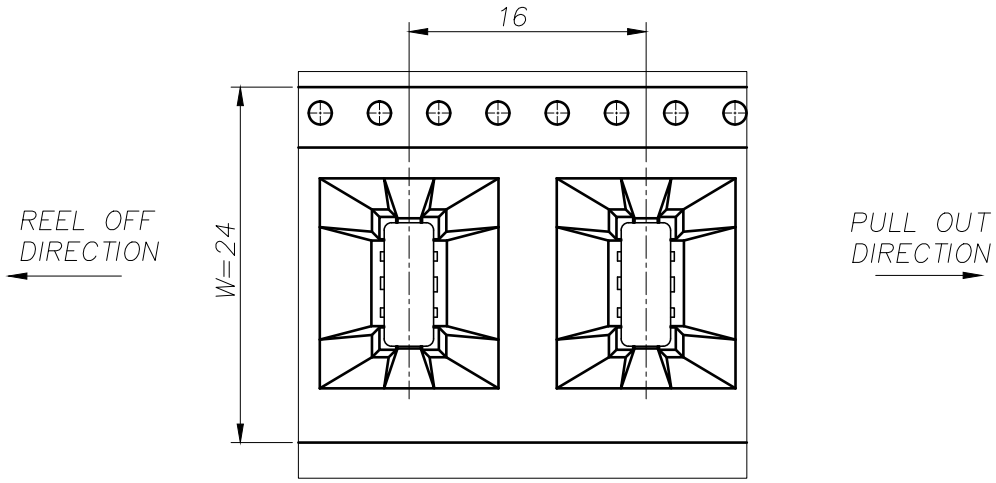

REVISION HISTORY

rev.	description	date
1.0	initial release	07/25/2024
1.01	CUI Devices rebranded to Same Sky	09/12/2024

The revision history provided is for informational purposes only and is believed to be accurate.

same sky

Same Sky offers a one (1) year limited warranty. Complete warranty information is listed on our website.

Same Sky reserves the right to make changes to the product at any time without notice. Information provided by Same Sky is believed to be accurate and reliable. However, no responsibility is assumed by Same Sky for its use, nor for any infringements of patents or other rights of third parties which may result from its use.

Same Sky products are not authorized or warranted for use as critical components in equipment that requires an extremely high level of reliability. A critical component is any component of a life support device or system whose failure to perform can be reasonably expected to cause the failure of the life support device or system, or to affect its safety or effectiveness.

sameskydevices.com