CUI Devices is now Same Sky! Learn More

MODEL: UJ20-C-V-TH-12B-P16-TR-X6 | DESCRIPTION: USB RECEPTACLE

FEATURES

- USB Type C receptacle
- USB 2.0
- 480 Mbit/s data transfer speed
- tape & reel packaging



SPECIFICATIONS

parameter	conditions/description	min	typ	max	units
USB standard	USB 2.0				
rated input voltage				20	Vdc
rated input current	as per EIA-364-70, Method B power pins collectively (A1, A4, A9, A12, B1, B4, B9, B12) VCONN pins individually (A5, B5) all other signal pins individually			5.0 1.25 0.25	A A A
contact resistance[1]	between terminals and mating plug			50	mΩ
insulation resistance	at 100 Vdc between adjacent contacts	100			MΩ
voltage withstand	between adjacent contacts for 1 minute	100			Vac
insertion force		5		20	N
withdrawal force		8		20	N
life			10,000		cycles
operating temperature		-30		85	°C
flammability rating	UL94V-0				
RoHS	yes				
IP level	IPX6				

Note: 1. When measured at 20 mV / 100 mA.

SOLDERABILITY

parameter	conditions/description	min	typ	max	units
reel storage	at 20~26°C, less than 75% humidity				°C
reflow soldering	see reflow profile		255	260	°C

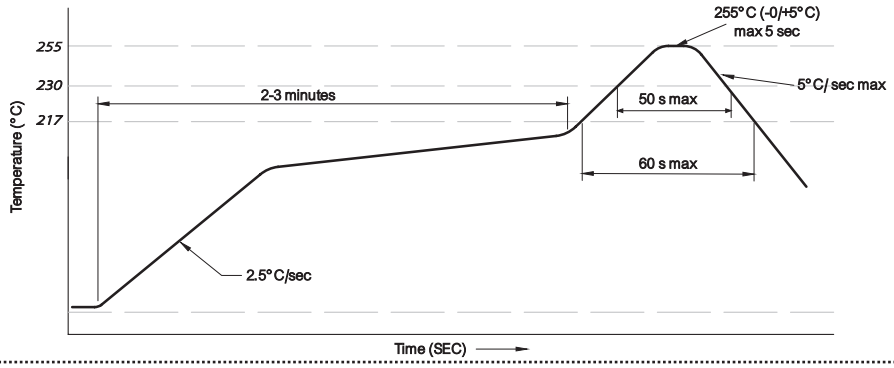

MECHANICAL DRAWING

units: mm
tolerance:
X.X ±0.30 mm
X.XX ±0.20 mm
X.XXX ±0.10 mm
unless otherwise specified

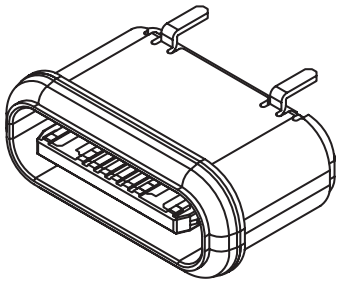

DESCRIPTION	MATERIAL	PLATING/COLOR
housing	LCP (UL94V-0)	black
insulation jacket	PA46 (UL94V-0)	black
contact	C7025	contact area: gold flash over 50 µ" nickel solder area: gold flash over 50 µ" nickel
shell	SUS304	30 µ" nickel
mid plate	SUS301	--
o-ring	acrylate	red

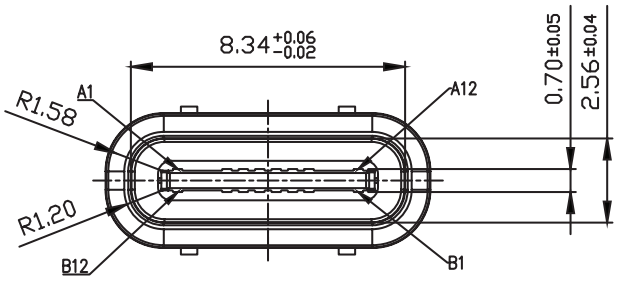

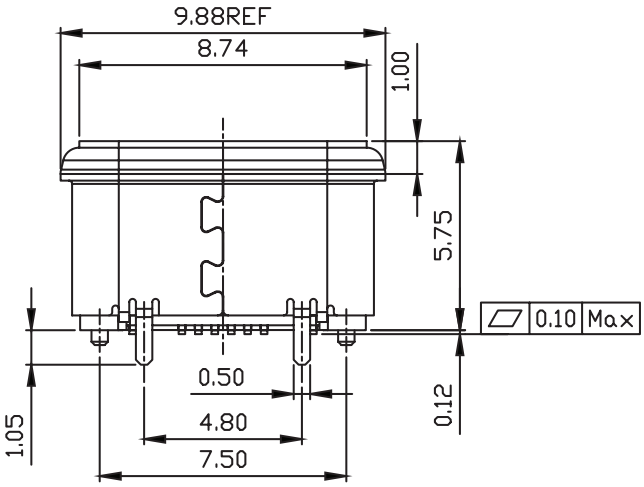

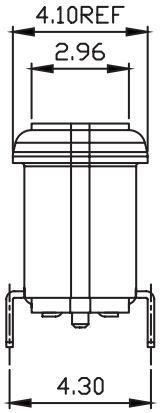

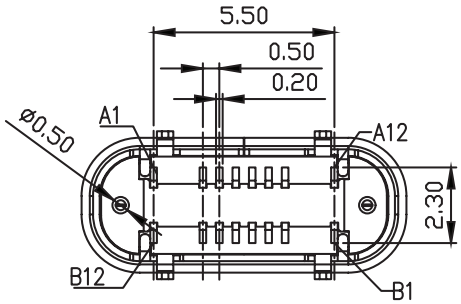

MECHANICAL DRAWING (CONTINUED)

units: mm
PCB tolerance: ±0.05 mm
PCB thickness: 1.0 mm

PIN CONNECTIONS			
PIN	SIGNAL NAME	PIN	SIGNAL NAME
A1	GND	B12	GND
A4	VBUS	B9	VBUS
A5	CC1	B8	SBU2
A6	Dp1	B7	Dn2
A7	Dn1	B6	Dp2
A8	SBU1	B5	CC2
A9	VBUS	B4	VBUS
A12	GND	B1	GND

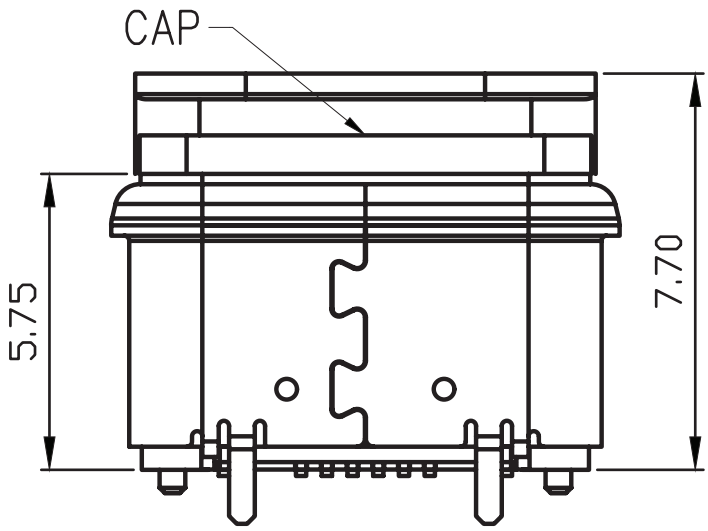

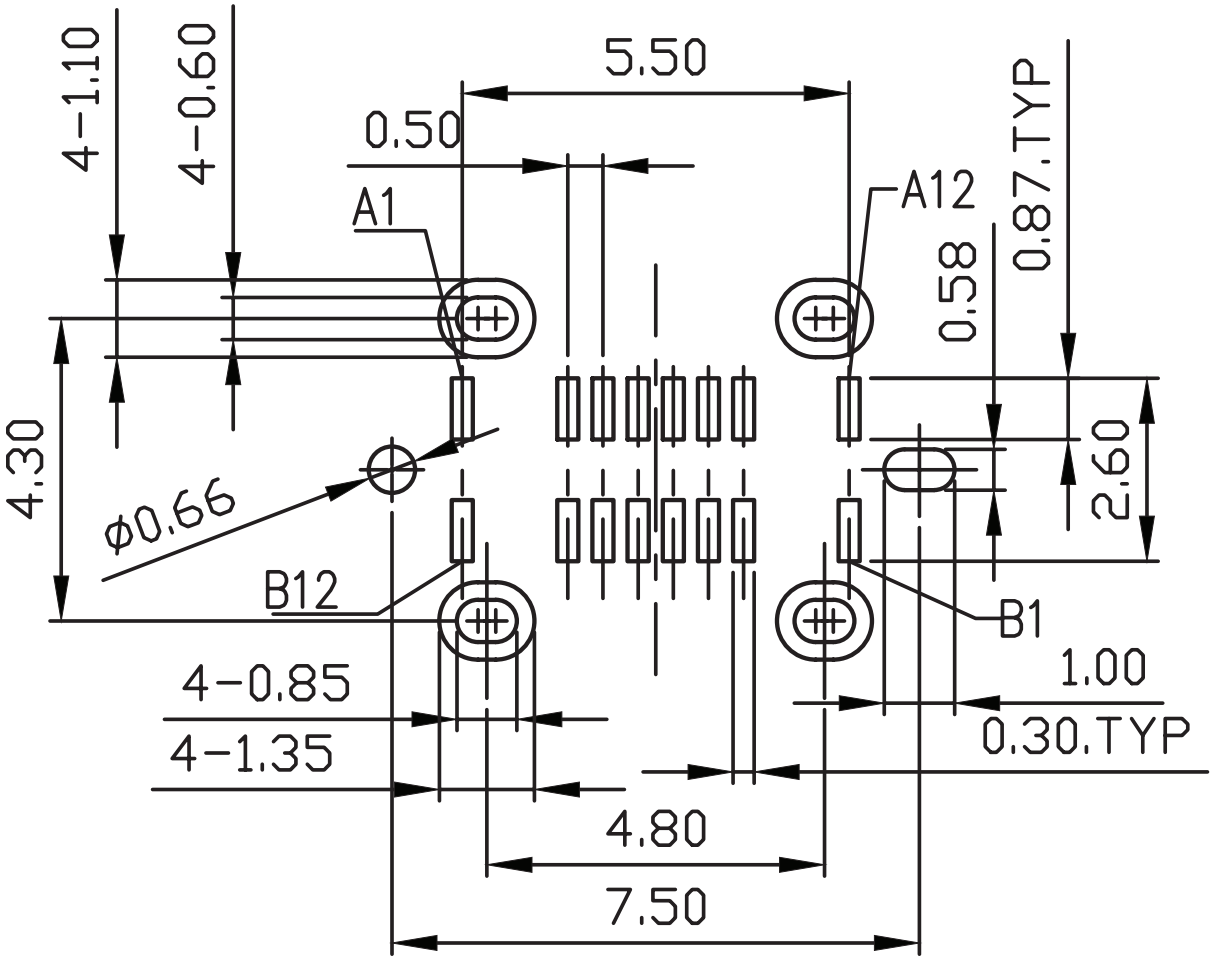

Recommended PCB Layout
Top View

ASSEMBLY REFERENCE

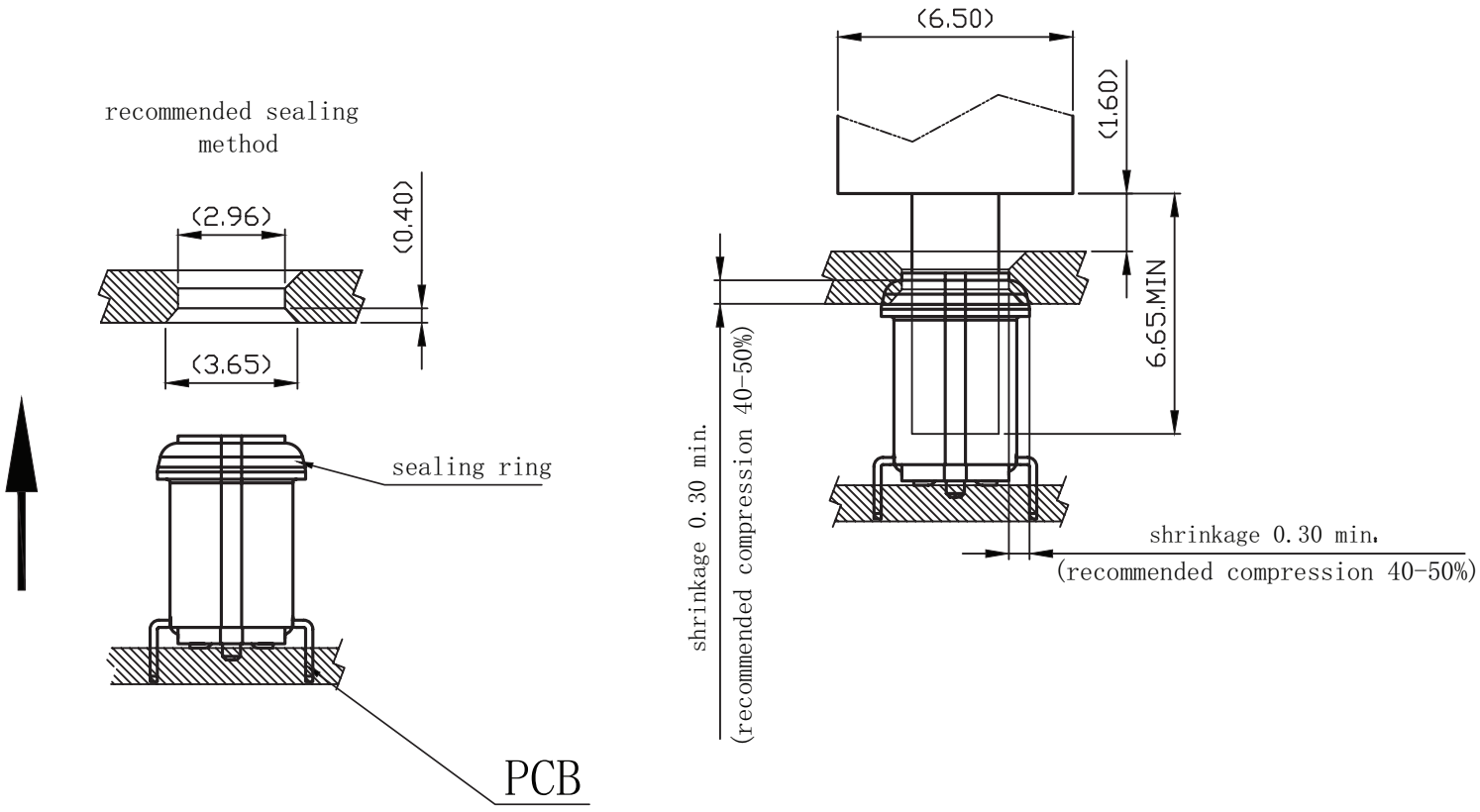

PACKAGING

units: mm

Reel Size: Ø330 mm
Reel QTY: 600 pcs per reel

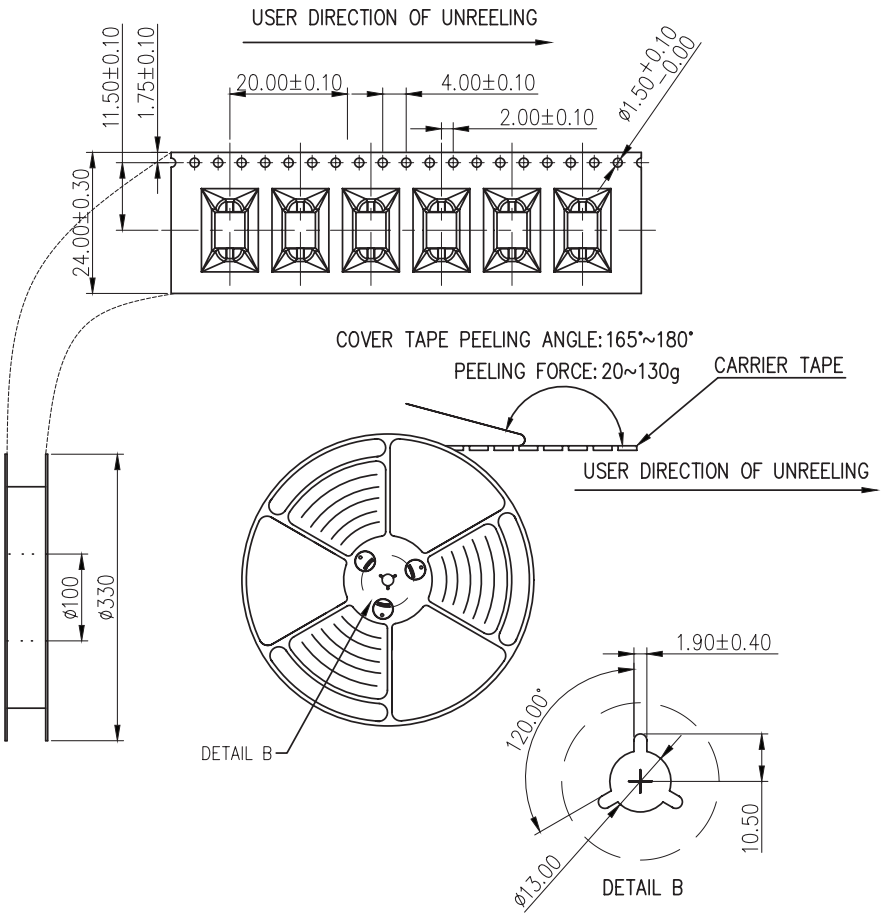

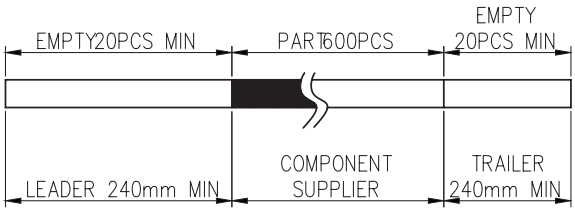

REVISION HISTORY

rev.	description	date
1.0	initial release	08/20/2026

The revision history provided is for informational purposes only and is believed to be accurate.

same sky

Same Sky offers a one (1) year limited warranty. Complete warranty information is listed on our website.

Same Sky reserves the right to make changes to the product at any time without notice. Information provided by Same Sky is believed to be accurate and reliable. However, no responsibility is assumed by Same Sky for its use, nor for any infringements of patents or other rights of third parties which may result from its use.

Same Sky products are not authorized or warranted for use as critical components in equipment that requires an extremely high level of reliability. A critical component is any component of a life support device or system whose failure to perform can be reasonably expected to cause the failure of the life support device or system, or to affect its safety or effectiveness.

sameskydevices.com