CUI Devices is now Same Sky! Learn More

MODEL: UJ20-C-H-C-3-SMT-TR | DESCRIPTION: USB RECEPTACLE

FEATURES

- USB Type C receptacle
- USB 2.0
- 480 Mbit/s data transfer speed
- reflow solder compatible
- tape & reel packaging

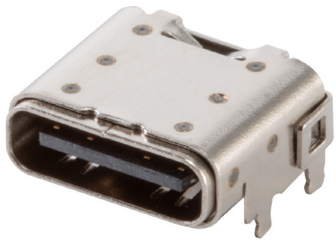

RoHS

SPECIFICATIONS

parameter	conditions/description	min	typ	max	units
USB standard	USB 2.0				
rated input voltage				20	Vdc
rated input current	as per EIA-364-70, Method B power pins collectively (A1, A4, A9, A12, B1, B4, B9, B12) VCONN pins individually (A5, B5) all other signal pins individually			5.0 1.25 0.25	A A A
contact resistance[1]				40	mΩ
insulation resistance	at 200 Vdc	100			MΩ
voltage withstand	for 1 minute	100			Vac
insertion force		5		20	N
withdrawal force		6		20	N
life			10,000		cycles
operating temperature		-40		85	°C
flammability rating	UL94V-0				
RoHS	yes				

Note: 1. When measured at 20 mV / 100 mA.
2. All specifications measured at 10~35°C, humidity at 45~85%, under standard atmospheric pressure, unless otherwise noted.

SOLDERABILITY

parameter	conditions/description	min	typ	max	units
reel storage	at relative humidity 65~70%	25		30	°C
reflow soldering[3]	see reflow profile		255	260	°C

Note: 3. It is recommended to reflow solder within 3 months from opening vacuum packaging at a temperature of 25~30°C & relative humidity 65~70%.

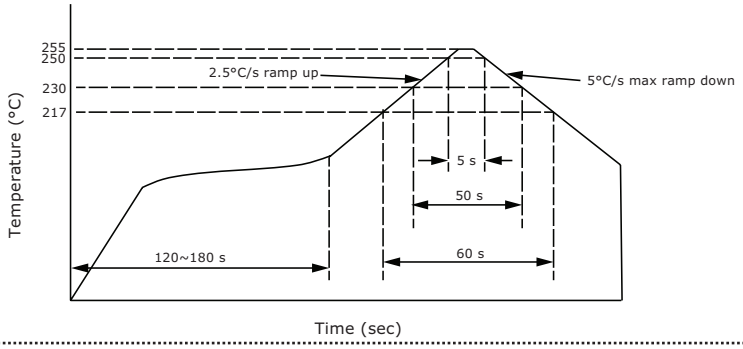

MECHANICAL DRAWING

units: mm
tolerance:
X. ±0.50 mm
X.X ±0.30 mm
X.XX ±0.20 mm
X.XXX ±0.10 mm
unless otherwise specified

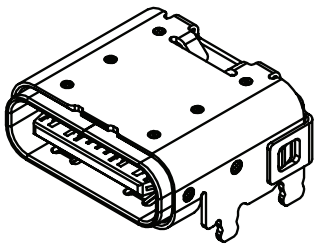

DESCRIPTION	MATERIAL	PLATING/COLOR
insulator	LCP (UL94V-0)	black
contact	copper alloy t=0.12 mm	contact area: gold flash over 50 µ" nickel solder area: 80 µ" matte tin over 50 µ" nickel
shell	stainless steel t=0.25 mm	50 µ" nickel
cover shell	stainless steel t=0.25 mm	50 µ" nickel
mid plate	stainless steel t=0.15 mm	50 µ" nickel

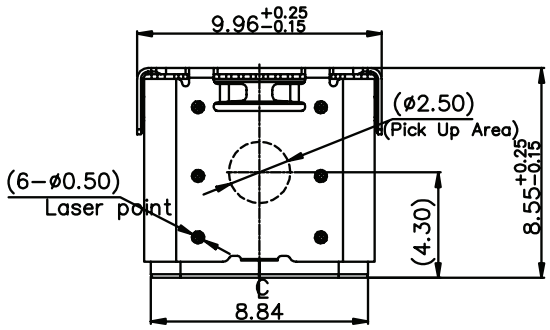

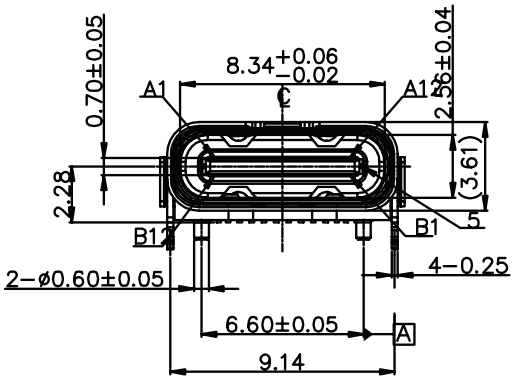

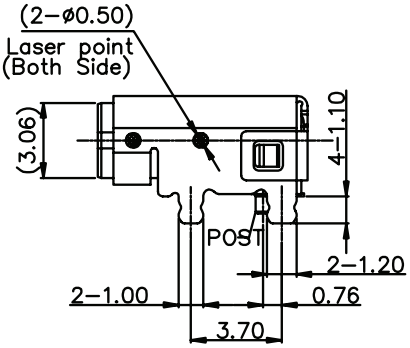

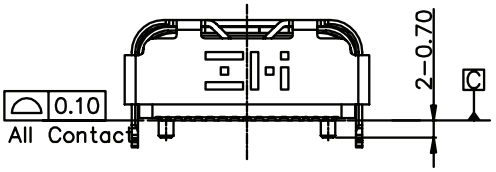

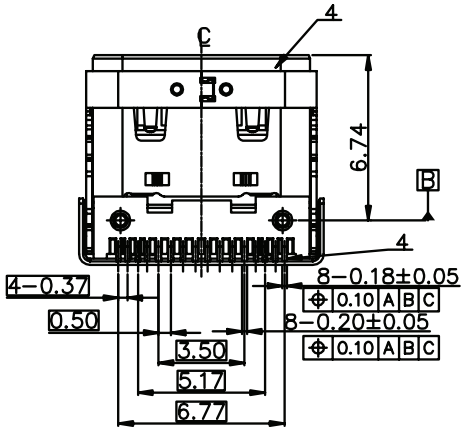

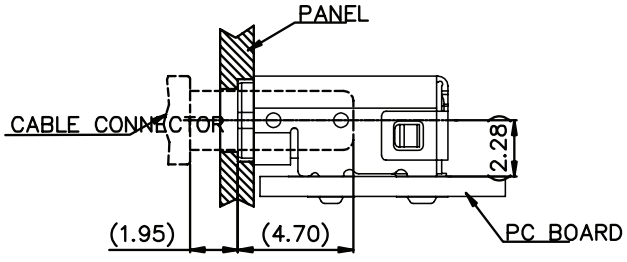

RECESSED MOUNTING CONFIGURATION

MECHANICAL DRAWING (CONTINUED)

units: mm
PCB tolerance: ±0.05 mm
PCB thickenss: 1.0±0.05 mm

PIN CONNECTIONS					
PIN	SIGNAL NAME	MATING SEQUENCE	PIN	SIGNAL NAME	MATING SEQUENCE
A1	GND	FIRST	B12	GND	FIRST
A4	VBUS	FIRST	B9	VBUS	FIRST
A5	CC1	SECOND	B8	SBU2	SECOND
A6	Dp1	SECOND	B7	Dn2	SECOND
A7	Dn1	SECOND	B6	Dp2	SECOND
A8	SBU1	SECOND	B5	CC2	SECOND
A9	VBUS	FIRST	B4	VBUS	FIRST
A12	GND	FIRST	B1	GND	FIRST
SHELL		GND	SHELL		GND

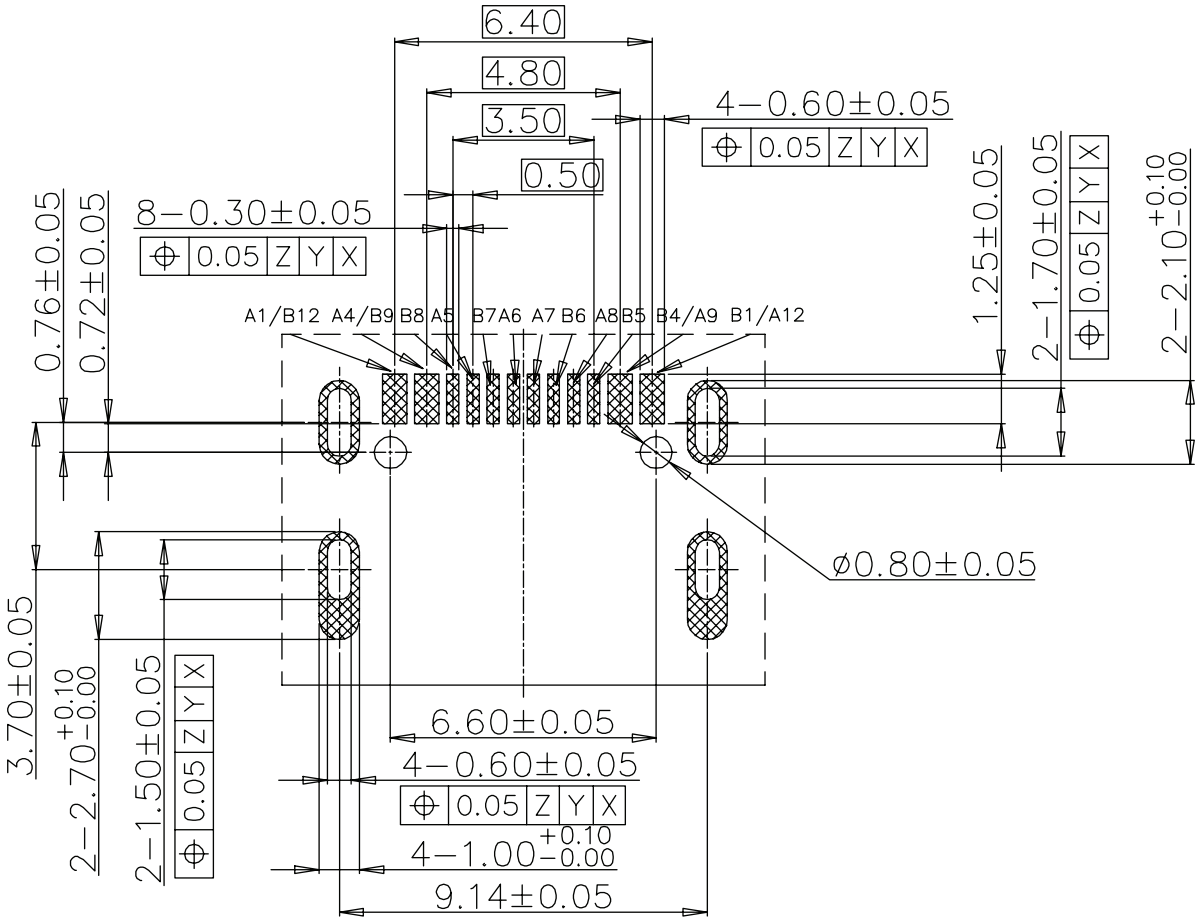

Recommended PCB Layout
Top View

PACKAGING

units: mm

Reel Size: Ø380 mm
Reel QTY: 950 pcs per reel

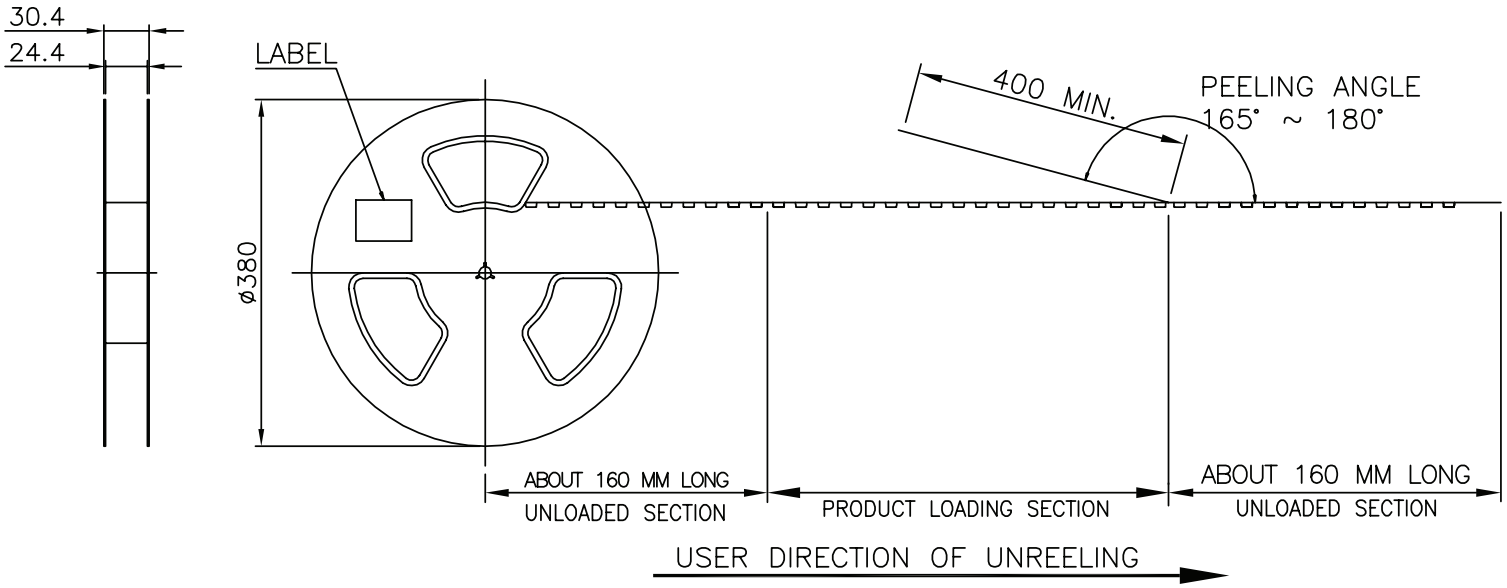

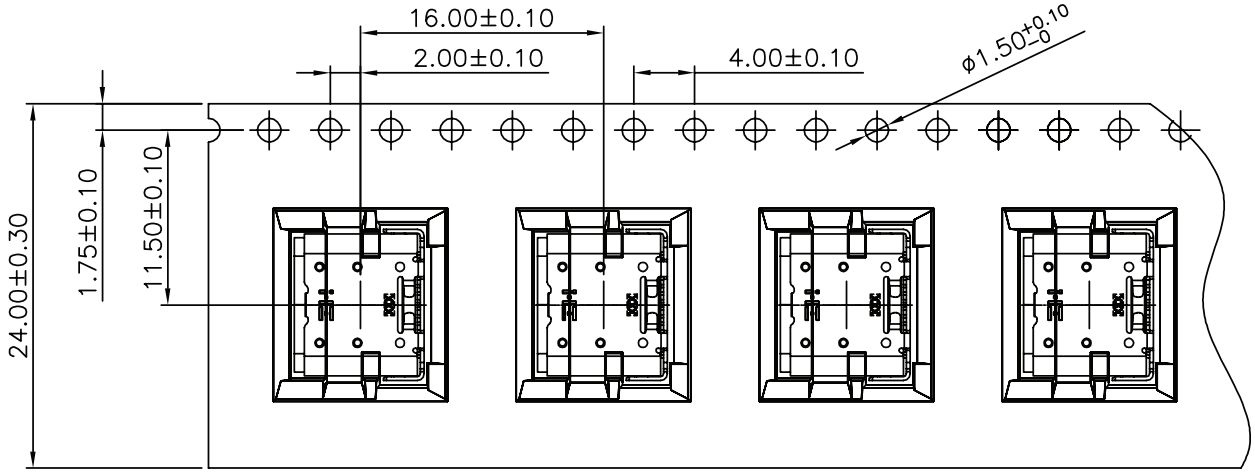

REVISION HISTORY

rev.	description	date
1.0	initial release	05/17/2024
1.01	CUI Devices rebranded to Same Sky	09/12/2024

The revision history provided is for informational purposes only and is believed to be accurate.

same sky

Same Sky offers a one (1) year limited warranty. Complete warranty information is listed on our website.

Same Sky reserves the right to make changes to the product at any time without notice. Information provided by Same Sky is believed to be accurate and reliable. However, no responsibility is assumed by Same Sky for its use, nor for any infringements of patents or other rights of third parties which may result from its use.

Same Sky products are not authorized or warranted for use as critical components in equipment that requires an extremely high level of reliability. A critical component is any component of a life support device or system whose failure to perform can be reasonably expected to cause the failure of the life support device or system, or to affect its safety or effectiveness.

sameskydevices.com