# Unit LoRaE220-433

SKU:U170-433


















## Description

**Unit LoRaE220-433** is a LoRa communication unit for the 433MHz frequency band launched by M5Stack, using the LLCC68 chip solution. Compared to the traditional SX1278 solution, the LLCC68 offers advantages such as longer transmission distance, faster speed, and lower power consumption. This unit supports features like over-the-air wake-up, carrier sensing, and communication keys, enabling point-to-point transmission and broadcast modes through convenient serial communication. The module can switch between four different working modes via an onboard DIP switch, allowing users to send and receive data without complex configurations, meeting various communication needs. It is suitable for applications such as home security alarms, building automation, smart homes, and the automotive industry.

## Features

- LLCC68 chip solution
- Maximum transmit power of 22dBm, software-adjustable in multiple levels
- Supports user-defined communication keys
- Supports over-the-air wake-up
- Supports point-to-point transmission, broadcast transmission, and channel listening
- Communication frequency band: supports 433MHz band (410.125 ~ 493.125MHz)
- Onboard DIP switch for communication mode adjustment
- Serial communication

## Includes

- 1 x LoRaE220-433 Unit
- 1 x HY2.0-4P Grove cable (20cm)
- 1 x Rubber duck antenna (@2.5dBi, total length 110mm, SMA male)

## Applications

- Home security alarms and remote keyless entry
- Smart homes and industrial sensors
- Wireless alarm security systems
- Building automation solutions
- Wireless industrial remote controls
- Healthcare products
- Advanced metering infrastructure (AMI)
- Automotive industry applications

## Specifications

| Specification | Parameter |
| --- | --- |
| LoRa module | E220-400T22S@LLCC68 |
| Supported frequency | Default 433MHz (supports 410.125 ~ 493.125MHz) |
| Maximum transmit power | 22dBm, software-adjustable in multiple levels |
| Receive sensitivity | -129 dBm |
| Supply voltage | 5V |
| Communication method | Serial communication (115200) |
| Working modes | Transmission mode<br>WOR transmit mode<br>WOR receive mode<br>Sleep mode |
| Antenna | Rubber duck antenna (@2.5dBi, total length 110mm, SMA male) |
| Operating temperature | 0 ~ 40°C |
| Product Size | 71.4 x 24.0 x 8.0mm |
| Product Weight | 19.5g |
| Package Size | 138.0 x 93.0 x 9.0mm |
| Gross Weight | 24.9g |

# Learn

## Working Mode Configuration

Unit LoRaE220-433 Working Modes

| Working Mode (0-3) | M0, M1 | Mode Description |
| --- | --- | --- |
| 0: Transmit/Receive Mode | M0:OFF,<br>M1:OFF | Normal data packet transmission and reception mode |
| 1: WOR Transmit Mode | M0:ON,<br>M1:OFF | Transmit WOR data packets, this mode also supports data reception (supports over-the-air wake-up) |
| 2: WOR Receive Mode | M0:OFF,<br>M1:ON | Disables data transmission, this mode only supports WOR data packet reception |
| 3: Parameter Configuration Mode | M0:ON,<br>M1:ON | Switch to configuration mode to set module transmit power, channel, address, etc. |

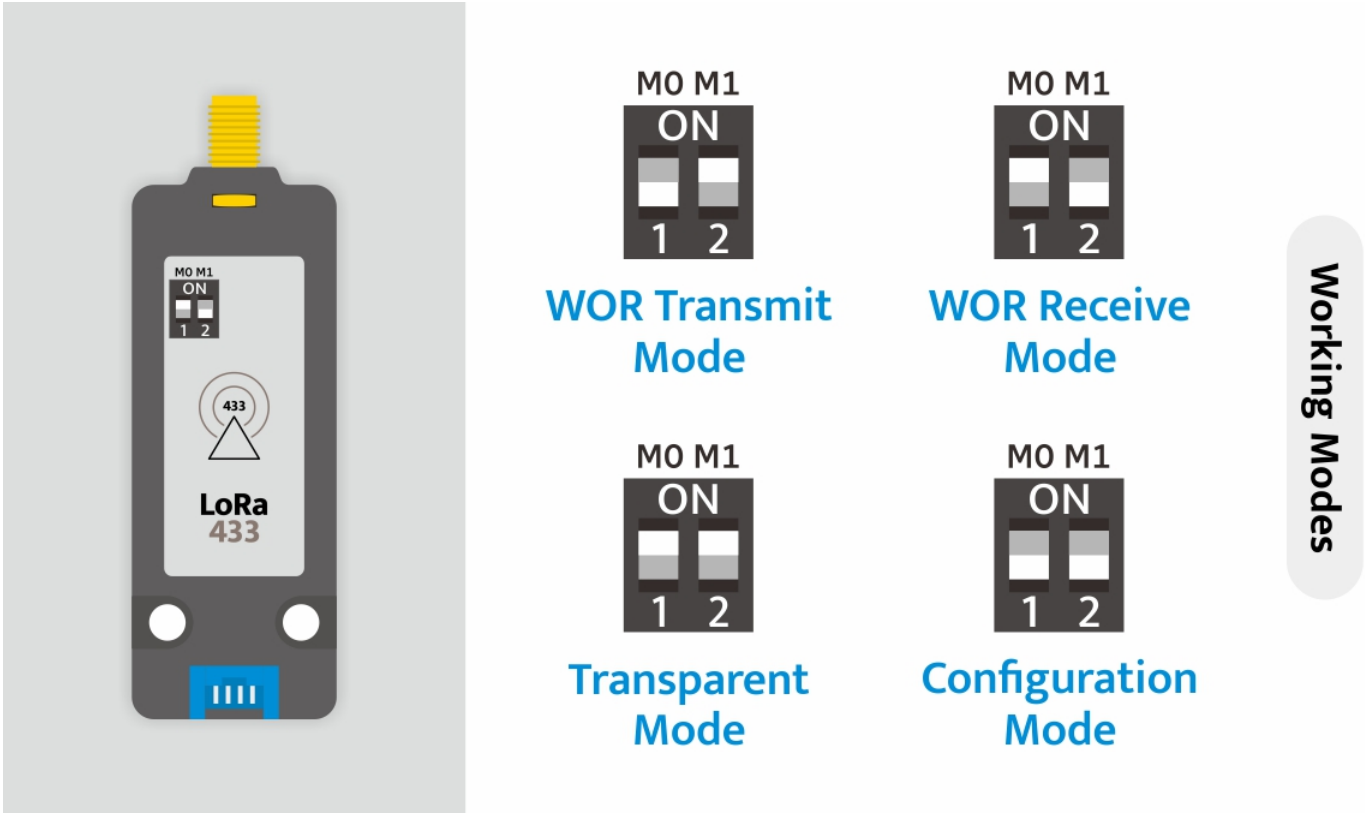


Due to the switch labeling, "ON" in the table above corresponds to state "0" in the datasheet, and "OFF" corresponds to state "1".

Note: Do not exceed the supply voltage of 5.5V, as exceeding this may permanently damage the module.

## Schematics

- Unit LoRaE220-433 Schematics PDF

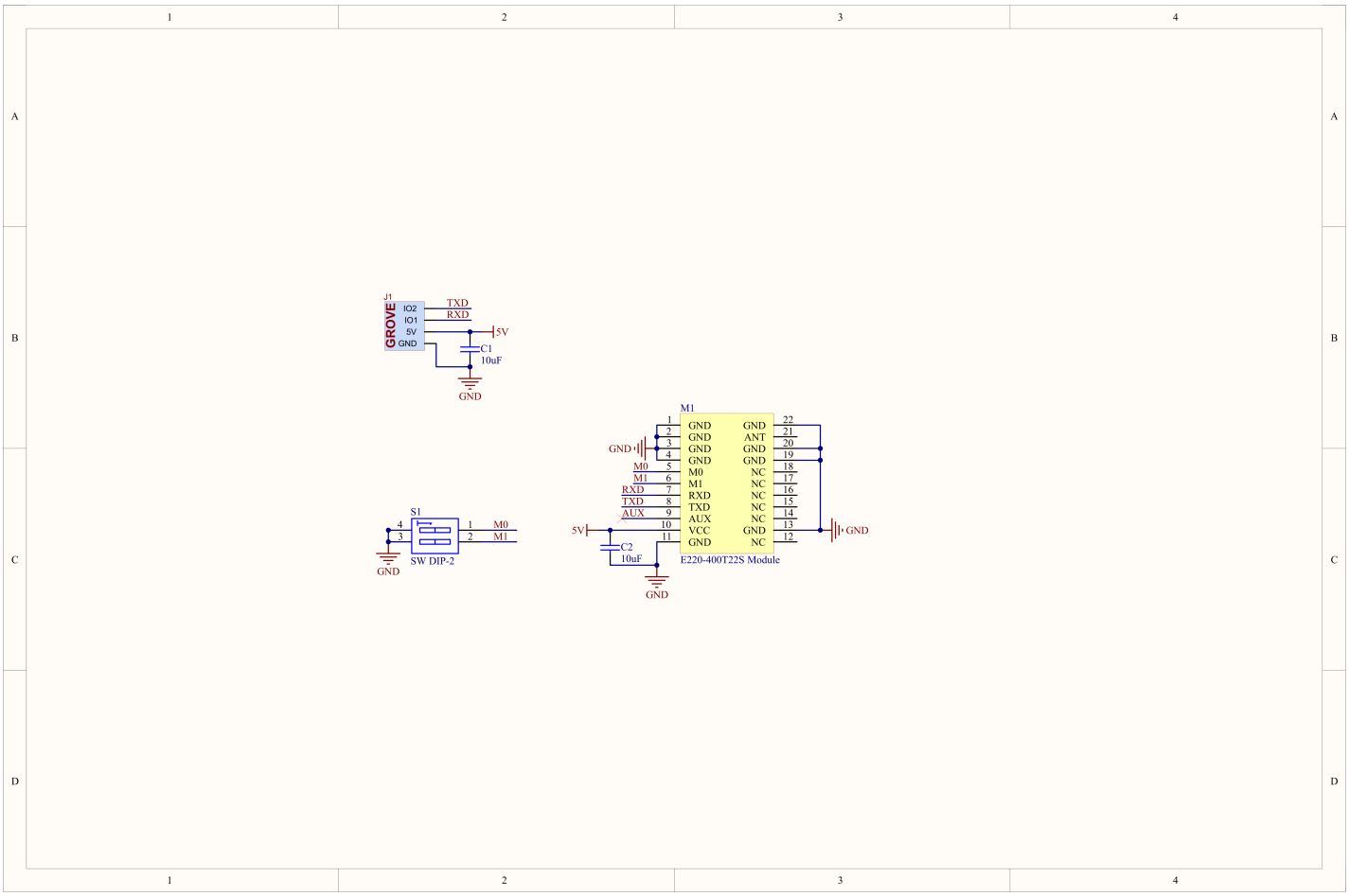


# PinMap

## Unit LoRaE220-433

| HY2.0-4P | Black | Red | Yellow | White |
|---|---|---|---|---|
| PORT.C | GND | 5V | UART_RX | UART_TX |

# Model Size

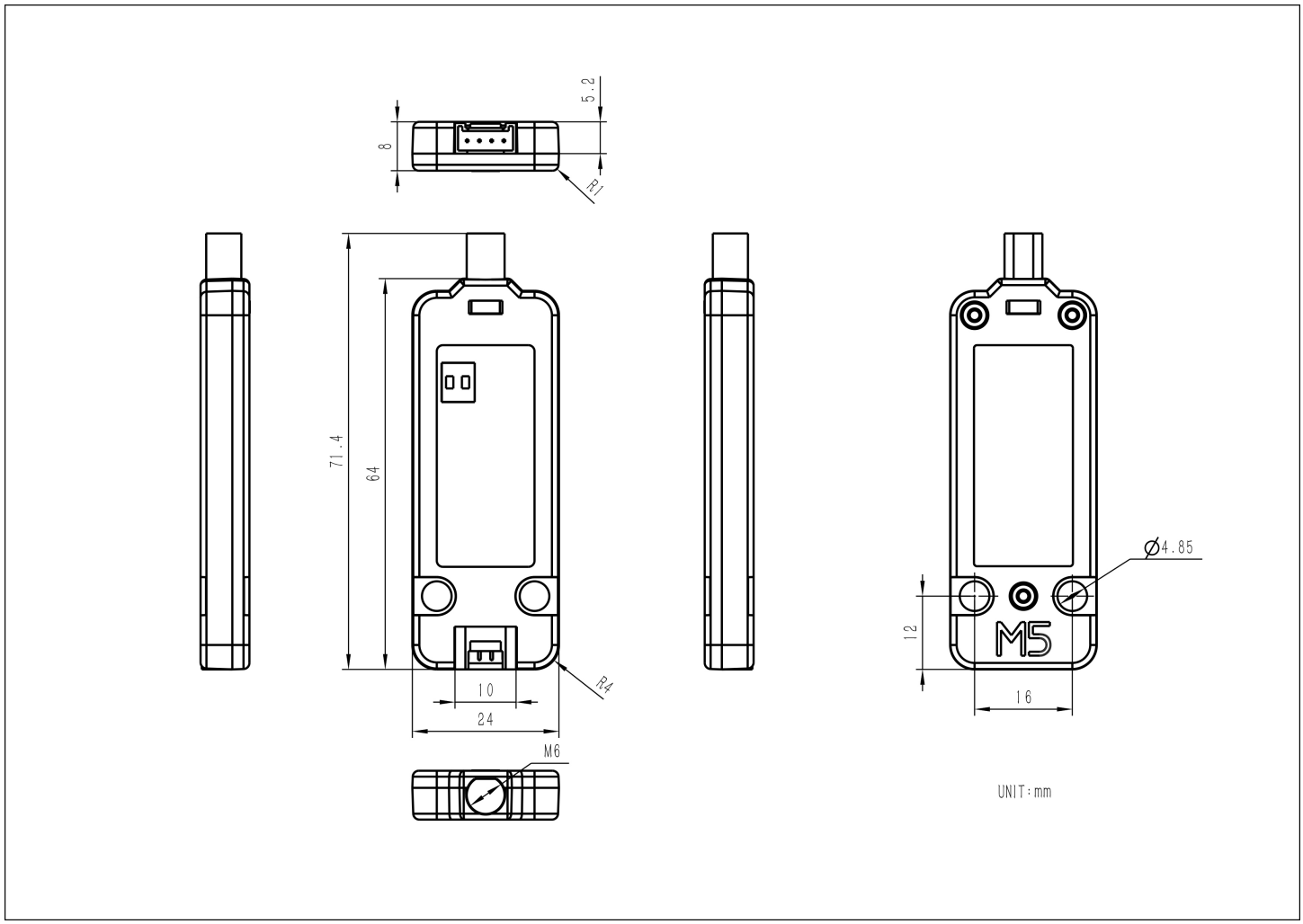


# Datasheets

- LORA Module_E220-400T22S

# Softwares

## Arduino

- Unit LoRaE220-433 Arduino Library

## UiFlow2

- Unit LoRaE220-433 UiFlow2 Docs

# Video

U170-433 LoRaE220-433 Unit 视频.mp4

# Product Comparison

## LoRa Unit

| Product Name | SKU | Chip Solution | Frequency | Max Transmit Power | Receive Sensitivity | Data Rate | Theoretical Range | Antenna Interface | Protocol Type |
|---|---|---|---|---|---|---|---|---|---|
| LoRaE220-433 Unit | U170-433 | E220-400T22S@LLCC68 | 433 MHz | 22 dBm | -129 dBm | 2.4k-62.5 kbps | 5 km | External rubber duck antenna | LoRa |
| LoRa-e220-JP unit | U170 | E220-900T22S@LLCC68 | 920 MHz | 13 dBm | -124 dBm | 1.7k-62.5 kbps | 5 km | External rubber duck antenna | LoRa |

| Product Name | SKU | Chip Solution | Frequency | Max Transmit Power | Receive Sensitivity | Data Rate | Theoretical Range | Antenna Interface | Protocol Type |
|---|---|---|---|---|---|---|---|---|---|
| LoRaWAN Unit 868MHz | U117 | ASR6501@ SX1262 | 868 MHz | 21 dBm | -136 dBm | 0.3k-37.5 kbps | 2-5 km | External rubber duck antenna | LoRaWAN |
| Unit LoRaWAN915 | U115 | ASR6501@ SX1262 | 915 MHz | 21 dBm | -136 dBm | 0.3k-37.5 kbps | 2-5 km | External rubber duck antenna | LoRaWAN |
| Unit LoRaWAN470 | U116 | ASR6501@ SX1262 | 470 MHz | 21 dBm | -136 dBm | 0.3k-37.5 kbps | 2-5 km | External rubber duck antenna | LoRaWAN |

## LoRa Module

| Product Name | SKU | Chip Solution | Frequency | Max Transmit Power | Receive Sensitivity | Data Rate | Theoretical Range | Antenna Interface | Protocol Type |
|---|---|---|---|---|---|---|---|---|---|
| Module-LoRa868_V1.1 | M029-V11 | Ra-01H@SX1276 | 868 MHz | 19 dBm | -148 dBm | UP to 300 kbps | 2-5 km | External rubber duck antenna | LoRa |
| Module-LoRa433_V1.1 | M005-V11 | Ra-02@SX1278 | 433 MHz | 18 dBm | -141 dBm | UP to 300 kbps | 2-5 km | External rubber duck antenna | LoRa |

| Product Name | SKU | Chip Solution | Frequency | Max Transmit Power | Receive Sensitivity | Data Rate | Theoretical Range | Antenna Interface | Protocol Type |
|---|---|---|---|---|---|---|---|---|---|
| Module LoRa 433MHz | M005 | Ra-02@SX1278 | 433 MHz | 18 dBm | -141 dBm | UP to 300 kbps | 2-5 km | FPC antenna | LoRa |
| Module LoRa868 | M029 | Ra-01H@SX1276 | 868 MHz | 19 dBm | -148 dBm | UP to 300 kbps | 2-5 km | FPC antenna | LoRa |
| COM.LoRaWAN 868 | M031-C | ASR6501@SX1262 | 868 MHz | 21 dBm | -136 dBm | 0.3k-37.5 kbps | 2-5 km | External rubber duck antenna | LoRaWAN |

| Product Name | SKU | Chip Solution | Frequency | Max Transmit Power | Receive Sensitivity | Data Rate | Theoretical Range | Antenna Interface | Protocol Type |
|---|---|---|---|---|---|---|---|---|---|
| COM.LoRaWAN470 | M031-C2 | ASR6501@SX1262 | 470 MHz | 21 dBm | -136 dBm | 0.3k-37.5 kbps | 2-5 km | External rubber duck antenna | LoRaWAN |
| COM.LoRaWAN868 v2.0 | M031-C4 | ASR6501@SX1262 | 868 MHz | 21 dBm | -136 dBm | 0.3k-37.5 kbps | 2-5 km | External rubber duck antenna | LoRaWAN |
| COM.LoRaWAN915 | M031-C3 | ASR6501@SX1262 | 915 MHz | 21 dBm | -136 dBm | 0.3k-37.5 kbps | 2-5 km | External rubber duck antenna | LoRa/LoRaWAN |

## LoRa Atom DTU

| Product Name | SKU | Chip Solution | Frequency | Max Transmit Power | Receive Sensitivity | Data Rate | Theoretical Range | Antenna Interface | Protocol Type |
|---|---|---|---|---|---|---|---|---|---|
| ATOM DTU LoRaWAN915 | K061 | ASR6501@SX1262 | 915 MHz | 21 dBm | -136 dBm | 0.3k-37.5 kbps | 2-5 km | External rubber duck antenna | LoRaWAN |
| ATOM DTU LoRaWAN868 | K063 | ASR6501@SX1262 | 868 MHz | 21 dBm | -136 dBm | 0.3k-37.5 kbps | 2-5 km | External rubber duck antenna | LoRaWAN |
| ATOM DTU LoRaWAN470 | K062 | ASR6501@SX1262 | 470 MHz | 21 dBm | -136 dBm | 0.3k-37.5 kbps | 2-5 km | External rubber duck antenna | LoRaWAN |