CUI Devices is now Same Sky! Learn More

SERIES: TS32 | DESCRIPTION: TACTILE SWITCH

FEATURES

- right angle
- with & without boss
- halogen & halogen free

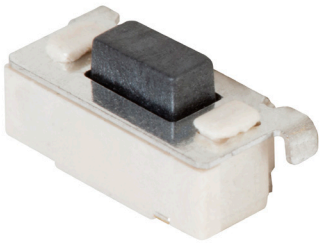

RoHS

SPECIFICATIONS

parameter	conditions/description	min	typ	max	units
rated voltage		1		12	Vdc
rated current		0.01		50	mA
withstanding voltage	for 1 minute		250		Vac
contact resistance				100	mΩ
insulation resistance	at 100 Vdc	100			MΩ
operating force	160 gf models 260 gf models	110 190	160 260	210 330	gf gf
return force		30			gf
actuator travel		0.15	0.25	0.35	mm
operating temperature		-40		85	°C
storage temperature		-40		85	°C
life	at 5 Vdc, 5 mA, 2 cylces/second, 1.5 times operating force 160 gf models 260 gf models		 100,000 50,000		 cycles cycles
vibration	10~55~10 Hz, 1.5 mm amplitude, 2 hours on each XYZ				
flammability rating	see material table				
RoHS	yes				

PART NUMBER KEY

TS32 - 7 - 35 - BK - X - XXX - RA - X - SMT - TR

- TS32: Base Number
- X: Boss: 'blank' = no boss; B = with boss
- XXX: Actuator Force (gf): 160 = 160; 260 = 260
- X: Halogen Free: 'blank' = with halogen; H = halogen free

MECHANICAL DRAWING (NO BOSS)

units: mm
tolerance:
L≤10: ±0.3
10<L≤100: ±0.5
100<L: ±0.6
unless otherwise specified

DESCRIPTION	MATERIAL	PLATING/COLOR
housing	LCP	white
terminal	brass	silver
dome	stainless steel	silver
cover	brass	tin
stem	LCP	black

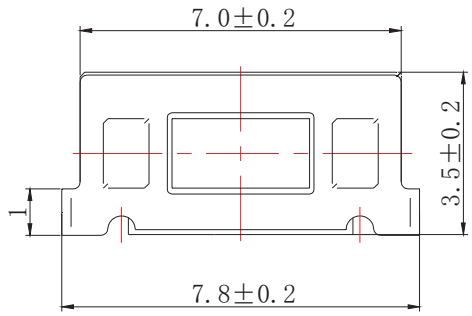

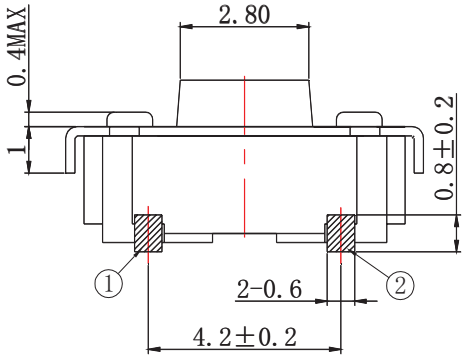

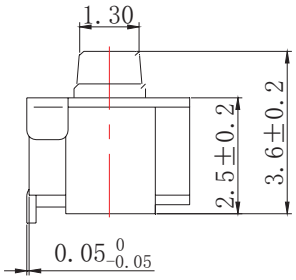

ACTUATOR POSITION [ ]: MOMENTARY	
NORMAL	DOWN
OFF	[ON]
SCHEMATIC	

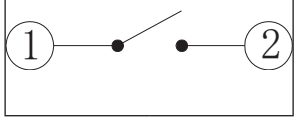

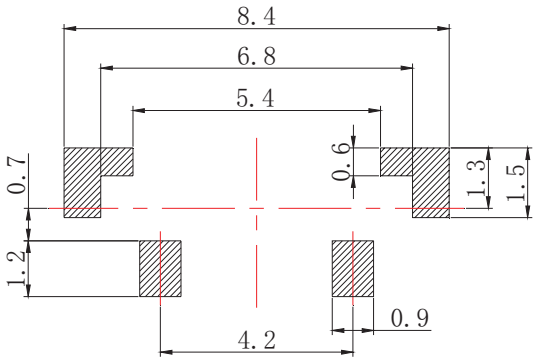

Recommended PCB Layout
Top View

MECHANICAL DRAWING (WITH BOSS)

units: mm
tolerance:
L≤10: ±0.3
10<L≤100: ±0.5
100<L: ±0.6
unless otherwise specified

DESCRIPTION	MATERIAL	PLATING/COLOR
housing	LCP	white
terminal	brass	silver
dome	stainless steel	silver
cover	brass	tin
stem	LCP	black

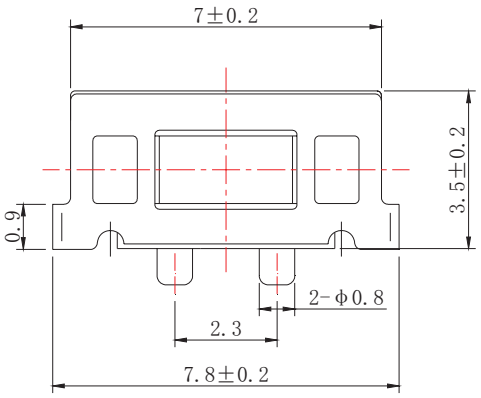

ACTUATOR POSITION [ ]: MOMENTARY	
NORMAL	DOWN
OFF	[ON]
SCHEMATIC	

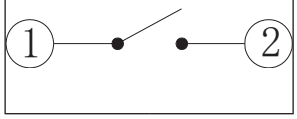

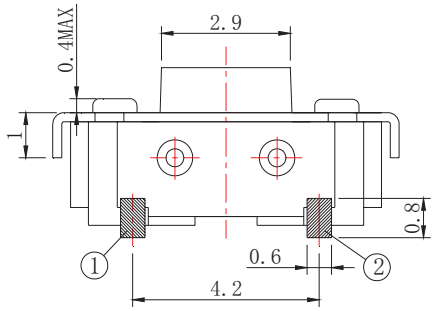

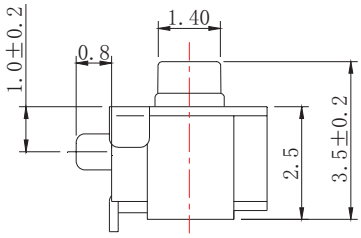

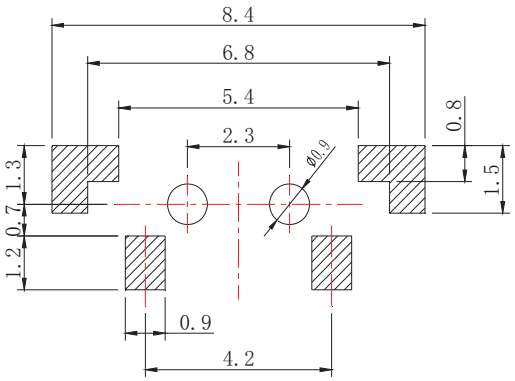

Recommended PCB Layout
Top View

SOLDERABILITY

parameter	conditions/description	min	typ	max	units
reflow soldering			260		°C

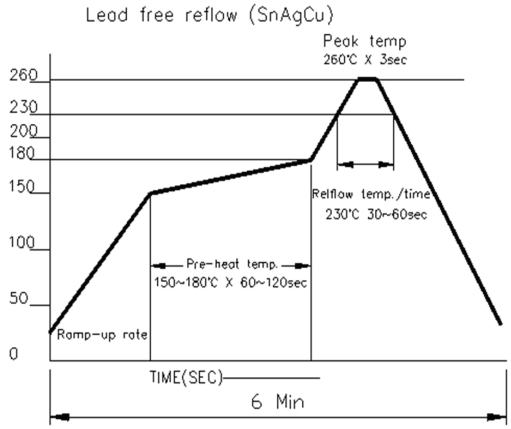

PACKAGING

units: mm

Reel QTY: 2,000 pcs

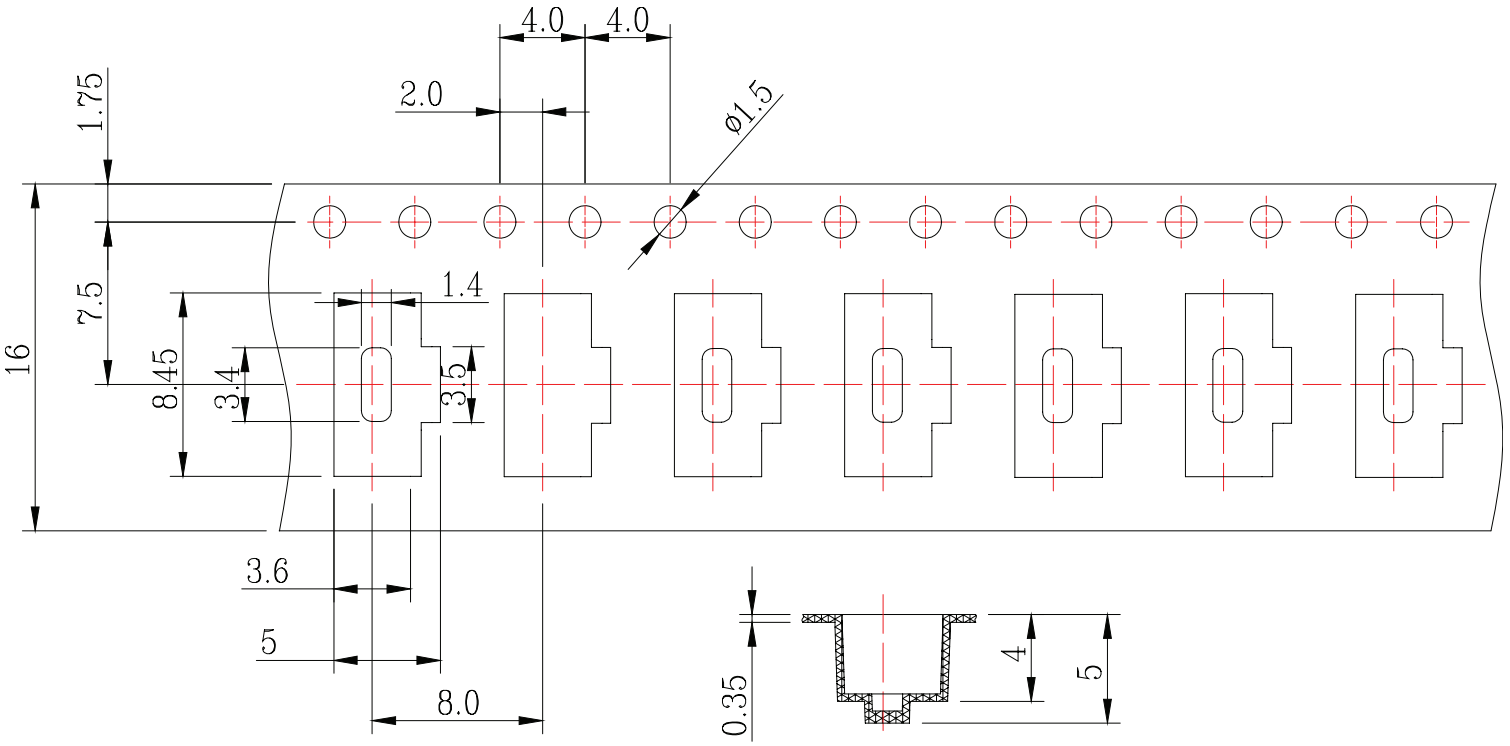

REVISION HISTORY

rev.	description	date
1.0	initial release	12/09/2024

The revision history provided is for informational purposes only and is believed to be accurate.

same sky

Same Sky offers a one (1) year limited warranty. Complete warranty information is listed on our website.

Same Sky reserves the right to make changes to the product at any time without notice. Information provided by Same Sky is believed to be accurate and reliable. However, no responsibility is assumed by Same Sky for its use, nor for any infringements of patents or other rights of third parties which may result from its use.

Same Sky products are not authorized or warranted for use as critical components in equipment that requires an extremely high level of reliability. A critical component is any component of a life support device or system whose failure to perform can be reasonably expected to cause the failure of the life support device or system, or to affect its safety or effectiveness.

sameskydevices.com