CUI Devices is now Same Sky! Learn More

same sky

SERIES: TS09 | DESCRIPTION: TACTILE SWITCH

FEATURES

- red or white actuator versions
- surface mount

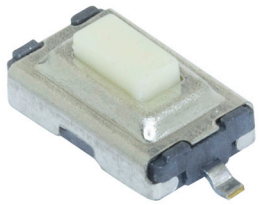

RoHS

SPECIFICATIONS

parameter	conditions/description	min	typ	max	units
rated voltage		1		12	Vdc
rated current		0.01		50	mA
withstanding voltage	for 1 minute		250		Vac
contact resistance	applying load of 2 times operating force at 5 Vdc, 10 mA			100	mΩ
insulation resistance	at 500 Vdc for 1 minute	100			MΩ
operating force	see force table				
actuator travel		0.15	0.25	0.35	mm
operating temperature		-30		80	°C
storage temperature		-40		90	°C
life	rated load, 1 cycle/second, 1.5 times operating force 160 gf models 260 gf models		 40,000 40,000		 cycles cycles
vibration	10~55~10 Hz, 1.5 mm amplitude, 2 hours on each XYZ				
flammability rating	see material table				
RoHS	yes				

PART NUMBER KEY

TS09 - 63 - XX - XX - XXX - SMT - TR

- TS09 - 63: Base Number
- XX: Housing Height: 25 = 2.5 mm
- XX: Actuator Color: R = red, WT = white
- XXX: Push Force: 160 = 160 gf, 260 = 260 gf

MECHANICAL DRAWING

units: mm
tolerance: ±0.2 mm
unless otherwise noted

ITEM	DESCRIPTION	MATERIAL	PLATING/COLOR
1	terminals	brass	silver
2	housing	LCP (UL94V-0)	black
3	contacts	SUS	silver
4	stem	PPA (UL94V-0)	
5	cover	SUS	

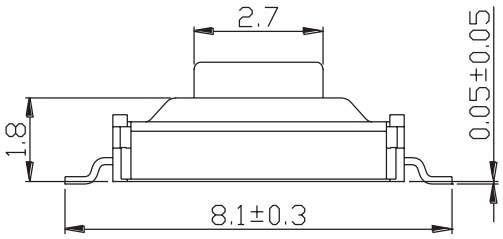

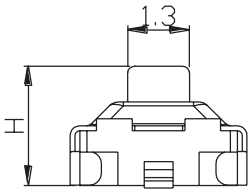

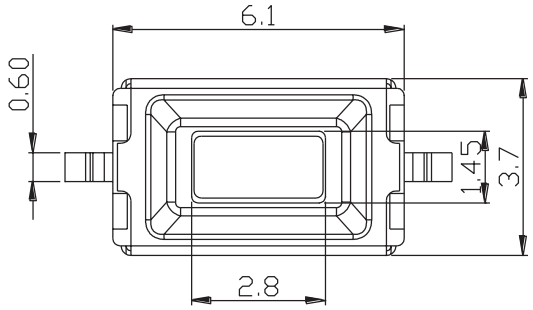

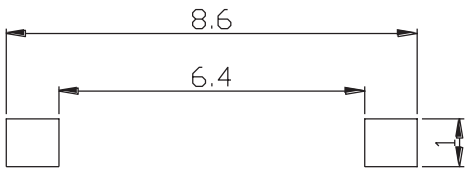

Recommended PCB Layout
Top View

ACTUATOR POSITION ( ): MOMENTARY	
NORMAL	DOWN
OFF	(ON)
SCHEMATIC	

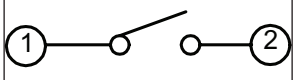

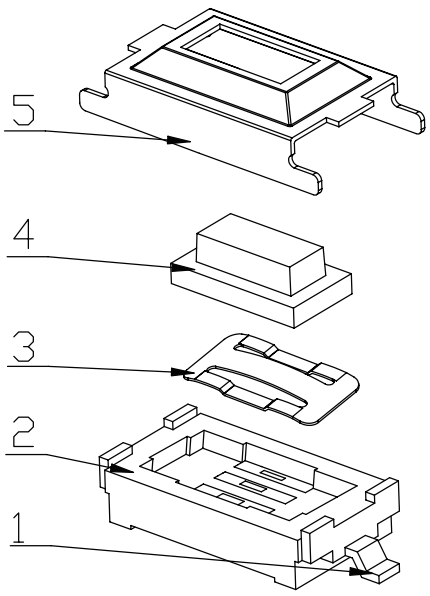

Operating Force Table		
Model	Press Force (N)	Return Force (N)
160	1.6±0.5	>0.2
260	2.6±0.7	>0.2

SOLDERABILITY

parameter	conditions/description	min	typ	max	units
hand soldering	for maximum 3 seconds			350	°C
reflow soldering[1]	see reflow profile			260	°C

Notes: 1. Do not exceed 2 reflow cycles.

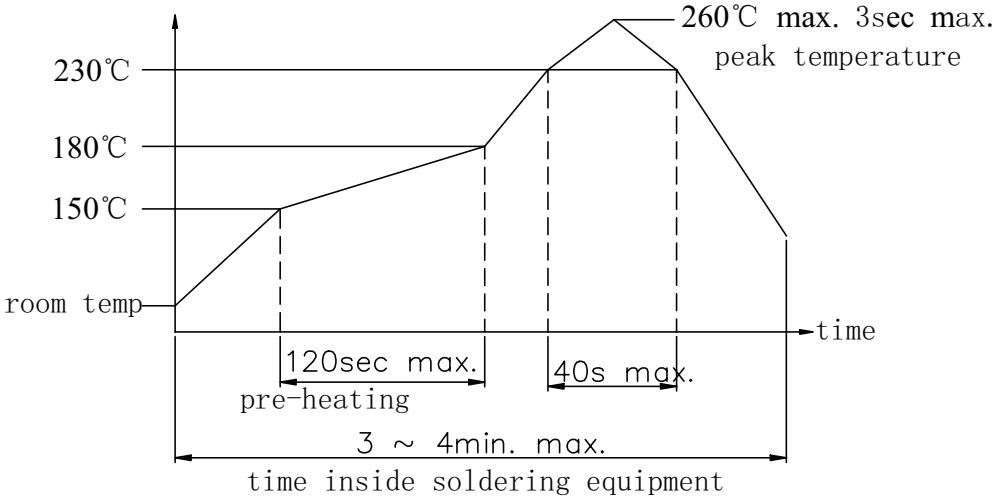

PACKAGING

units: mm

Reel Size: Ø330 mm
Reel QTY: 3,000 pcs per reel
Carton Size: 430 x 340 x 340 mm
Carton QTY: 60,000 pcs per carton

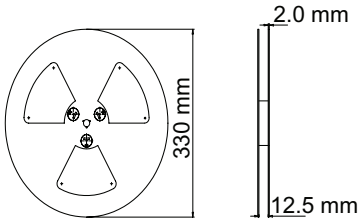

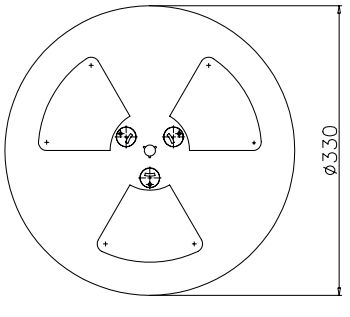

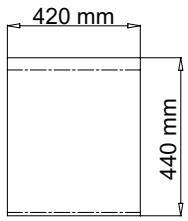

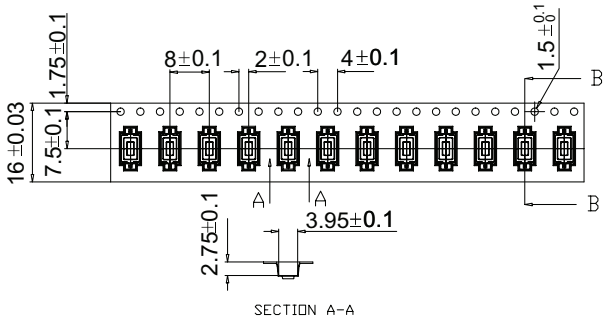

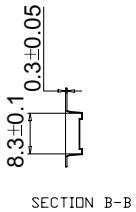

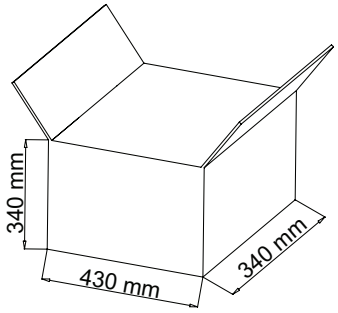

REVISION HISTORY

rev.	description	date
1.0	initial release	11/23/2021
1.01	logo, datasheet style update	08/05/2022
1.02	CUI Devices rebranded to Same Sky	09/12/2024

The revision history provided is for informational purposes only and is believed to be accurate.

same sky

Same Sky offers a one (1) year limited warranty. Complete warranty information is listed on our website.

Same Sky reserves the right to make changes to the product at any time without notice. Information provided by Same Sky is believed to be accurate and reliable. However, no responsibility is assumed by Same Sky for its use, nor for any infringements of patents or other rights of third parties which may result from its use.

Same Sky products are not authorized or warranted for use as critical components in equipment that requires an extremely high level of reliability. A critical component is any component of a life support device or system whose failure to perform can be reasonably expected to cause the failure of the life support device or system, or to affect its safety or effectiveness.

sameskydevices.com