CUI Devices is now Same Sky! Learn More

same sky

SERIES: TS04 | DESCRIPTION: TACTILE SWITCH

FEATURES

- surface mount
- black actuator



RoHS

SPECIFICATIONS

parameter	conditions/description	min	typ	max	units
rated voltage		1		12	Vdc
rated current		0.01		50	mA
withstanding voltage	for 1 minute		250		Vac
contact resistance	applying load of 2 times operating force at 5 Vdc, 10 mA			100	mΩ
insulation resistance	at 100 Vdc for 1 minute	100			MΩ
operating force	see force table				
actuator travel		0.15	0.25	0.35	mm
operating temperature		-30		80	°C
storage temperature		-40		90	°C
life	rated load, 2 cycles/second, 1.5 times operating force 100 gf models 160 gf models 260 gf models		 100,000 80,000 60,000		 cycles cycles cycles
vibration	10~55~10 Hz, 1.5 mm amplitude, 2 hours on each XYZ				
flammability rating	see material table				
RoHS	yes				

PART NUMBER KEY

TS04 - 66 - XX - BK - XXX - SMT - XX

- TS04 - 66: Base Number
- XX: Actuator Height above PCB:
  43 = 4.3 mm, *73 = 7.3 mm
  50 = 5.0 mm, 75 = 7.5 mm
  55 = 5.5 mm, 85 = 8.5 mm
  65 = 6.5 mm, 95 = 9.5 mm
  70 = 7.0 mm
- XXX: Push Force:
  100 = 100 gf
  160 = 160 gf
  260 = 260 gf
- XX: Packaging:
  "blank" = bag
  TR = tape and reel

Note: *7.3 mm height versions have square actuator top. All other models have round actuator top.

MECHANICAL DRAWING (7.3 MM HEIGHT MODELS)

units: mm
tolerance: ±0.2 mm
unless otherwise noted

ITEM	DESCRIPTION	MATERIAL	PLATING/COLOR
1	terminals	brass	silver
2	case	PA66 (UL94HB)	black
3	contacts	stainless steel	silver
4	cover	stainless steel	
5	stem	PA66 (UL94HB)	black

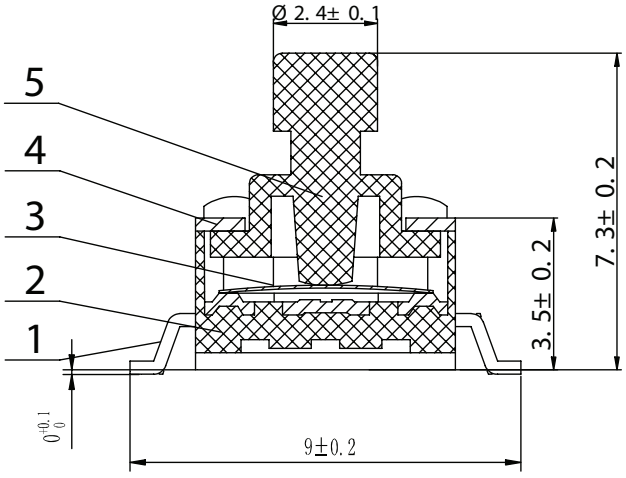

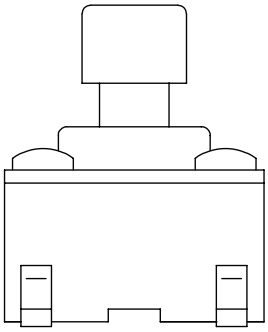

ACTUATOR POSITION [ ]: MOMENTARY	
NORMAL	DOWN
OFF	[ON]
SCHEMATIC	

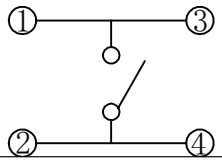

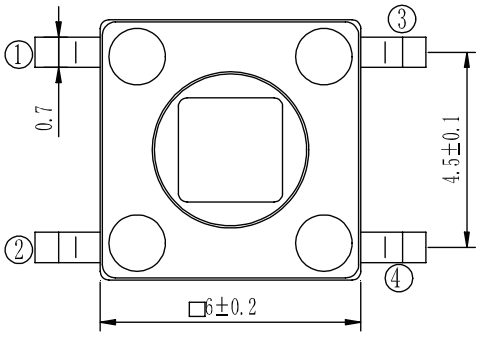

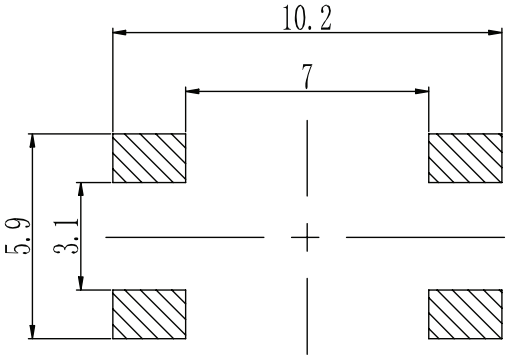

Recommended PCB Layout
Top View

Operting Force Table		
Model	Press Force (N)	Return Force (N)
100	1.0±0.3	>0.2
160	1.6±0.5	>0.2
260	2.6±0.5	>0.2

MECHANICAL DRAWING (ALL OTHER HEIGHT MODELS)

units: mm
tolerance: ±0.2 mm
unless otherwise noted

ITEM	DESCRIPTION	MATERIAL	PLATING/COLOR
1	terminals	brass	silver
2	case	PA66 (UL94HB)	black
3	contacts	stainless steel	silver
4	cover	stainless steel	
5	stem	PA66 (UL94HB)	black

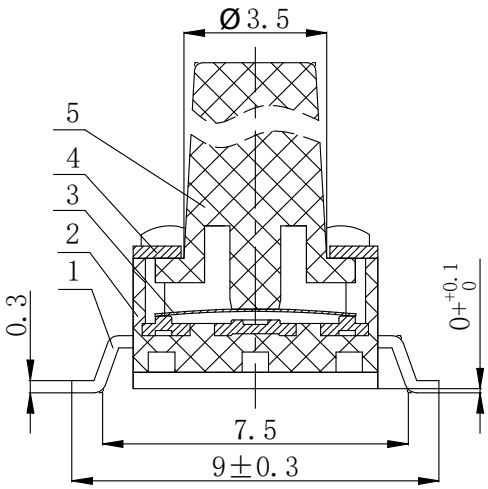

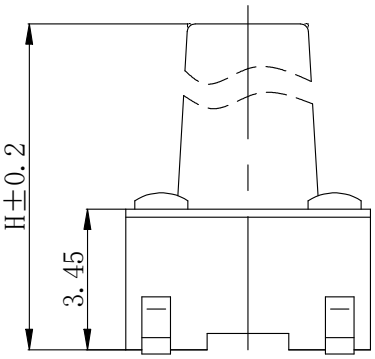

ACTUATOR POSITION [ ]: MOMENTARY	
NORMAL	DOWN
OFF	[ON]
SCHEMATIC	

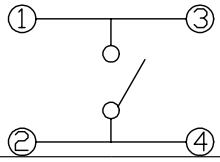

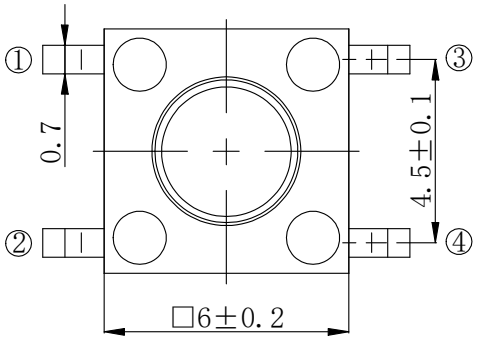

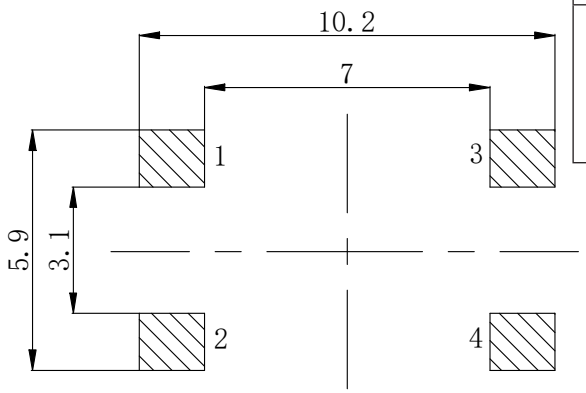

Recommended PCB Layout
Top View

Operting Force Table		
Model	Press Force (N)	Return Force (N)
100	1.0±0.3	>0.2
160	1.6±0.5	>0.2
260	2.6±0.5	>0.2

SOLDERABILITY

parameter	conditions/description	min	typ	max	units
hand soldering	for maximum 3 seconds			350	°C
reflow soldering[1]	see reflow profile			260	°C

Notes: 1. Do not exceed 2 reflow cycles.

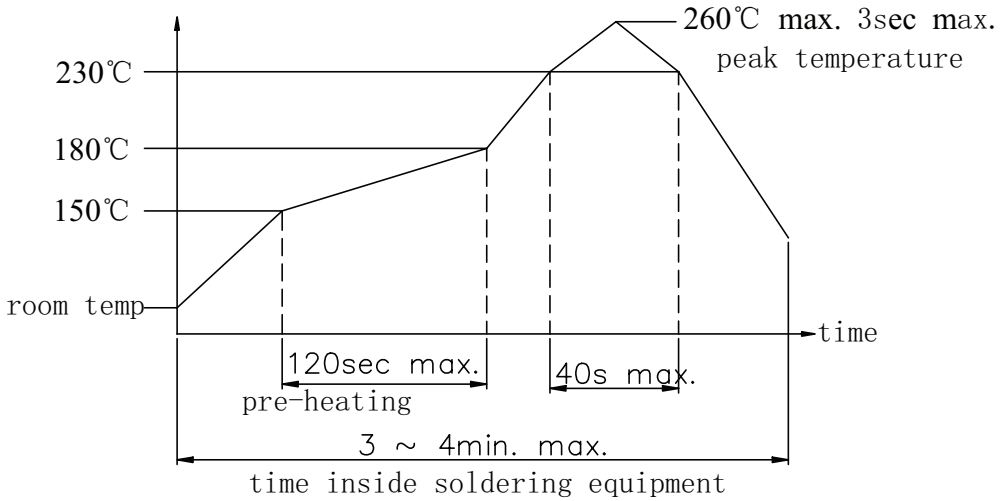

PACKAGING (BAG)

units: mm

Bag Size: 190 x 160 mm
Carton Box Size: 445 x 350 x 280 mm
Bag QTY: 1,000 pcs per bag
Carton Box QTY: 60,000 pcs per carton

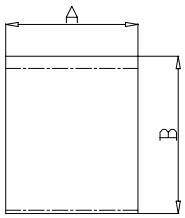

A=160mm、B=190mm

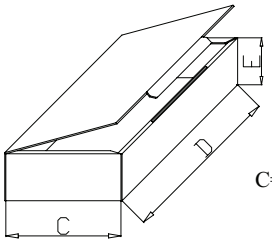

C=160mm、D=216mm、E=48mm

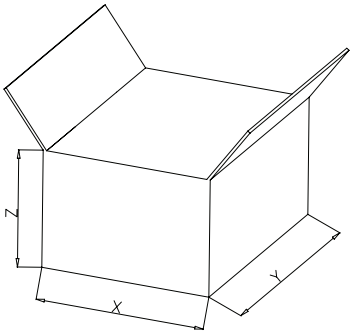

X=350mm、Y=455、Z=280mm

PACKAGING (TAPE & REEL)

Packaging Table									
Actuator Height Models (mm)	Reel QTY	Carton Size (XxYxZ) (mm)	Carton QTY	RW (mm)	W (mm)	A0 (mm)	B0 (mm)	K0 (mm)	F (mm)
4.3	1,000	340 x 430 x 340	20,000	16.5	16±0.3	6.3±0.1	10.4±0.1	4.5±0.1	7.5±0.1
5.0	1,000	340 x 430 x 340	20,000	16.5	16±0.3	6.3±0.1	10.4±0.1	5.2±0.1	7.5±0.1
5.5	1,000	340 x 430 x 340	20,000	16.5	16±0.3	6.3±0.1	10.4±0.1	5.7±0.1	7.5±0.1
6.5	800	340 x 430 x 340	16,000	16.5	16±0.3	6.3±0.1	10.4±0.1	6.7±0.1	7.5±0.1
7.0	750	340 x 430 x 340	10,500	24.5	24±0.3	6.3±0.1	10.3±0.1	7.3±0.1	11.5±0.1
7.3	750	340 x 430 x 340	10,500	24.5	24±0.3	6.4±0.1	10.5±0.1	7.8±0.1	11.5±0.1
7.5	750	340 x 430 x 340	10,500	24.5	24±0.3	6.4±0.1	10.5±0.1	7.8±0.1	11.5±0.1
8.5	500	340 x 430 x 340	7,000	24.5	24±0.3	6.3±0.1	10.4±0.1	$8.6^{+0.1}_{-0}$	11.5±0.1
9.5	500	340 x 430 x 340	7,000	24.5	24±0.3	6.3±0.1	10.4±0.1	$9.6^{+0.1}_{-0}$	11.5±0.1

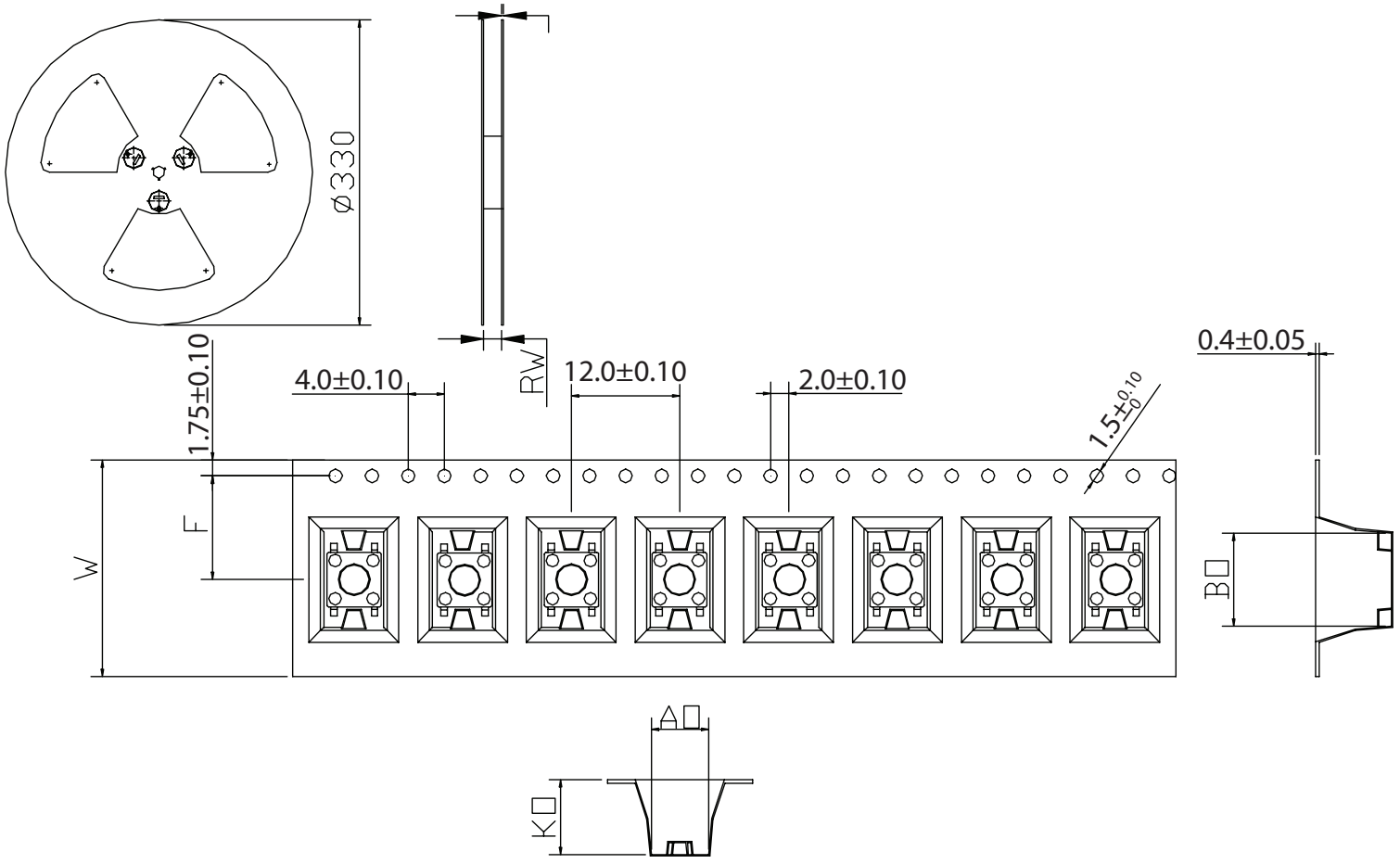

Note: 1. Actuator height 4.3 & 5.0 models have about 15~25 open positions reserved for the front and rear positions of the reel.
2. Actuator height 5.5 & 6.5 models have about 15~30 open positions reserved for the front and rear positions of the reel.
3. Actuator height 7.0, 7.3, & 7.5 models have about 20~35 open positions reserved for the front and rear positions of the reel.
4. Actuator height 8.5 & 9.5 models have about 30~50 open positions reserved for the front and rear positions of the reel.

REVISION HISTORY

rev.	description	date
1.0	initial release	09/20/2021
1.01	added 7.3 mm height model drawing	11/03/2021
1.02	logo, datasheet style update	08/05/2022
1.03	added tape and reel packaging option	05/12/2023
1.04	CUI Devices rebranded to Same Sky	09/12/2024
1.05	modified terminal shape and changed terminal plating	11/03/2025

The revision history provided is for informational purposes only and is believed to be accurate.

same sky

Same Sky offers a one (1) year limited warranty. Complete warranty information is listed on our website.

Same Sky reserves the right to make changes to the product at any time without notice. Information provided by Same Sky is believed to be accurate and reliable. However, no responsibility is assumed by Same Sky for its use, nor for any infringements of patents or other rights of third parties which may result from its use.

Same Sky products are not authorized or warranted for use as critical components in equipment that requires an extremely high level of reliability. A critical component is any component of a life support device or system whose failure to perform can be reasonably expected to cause the failure of the life support device or system, or to affect its safety or effectiveness.

sameskydevices.com