CUI Devices is now Same Sky! Learn More

same sky

Additional Resources: Product Page | 3D Model

SERIES: TBP02P1-381 | DESCRIPTION: TERMINAL BLOCK

FEATURES

- 2~24 poles
- 180° insertion entry
- 2~6 poles groove guide
- 3.81 mm pitch
- UL and CE safety approvals

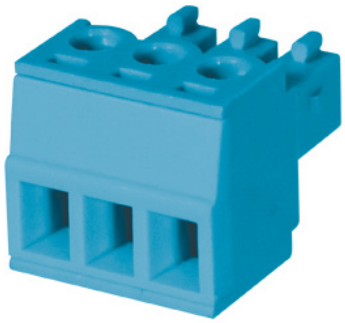



SPECIFICATIONS

parameter	conditions/description	min	typ	max	units
rated voltage (per contact)	UL IEC			300 250	V V
rated current (per contact)	UL IEC			8 7	A A
withstanding voltage			2000		Vac
surge voltage				4000	V
contact resistance				20	mΩ
insulation resistance	at 500 Vdc	500			MΩ
operating temperature		-40		105	°C
safety approvals	UL 1059, EN 60998-1:2004, EN 60998-2-1:2004				
flammability rating	UL94V-0				
RoHS	yes				

PART NUMBER KEY

TBP02P1-381 - XX XX

Base Number

No. of Poles:
02 10 18
03 11 19
04 12 20
05 13 21
06 14 22
07 15 23
08 16 24
09 17

Color:
*BE = blue
GR = green
OR = orange
YL = yellow
GY = gray
BK = black

*Standard housing color is blue. All other colors are subject to higher MOQ. Please inquire with Same Sky sales for details.

MECHANICAL DRAWING

units: mm
tolerance (per module):
X≤6.00: ±0.25 mm
6.00<X≤30.00: ±0.40 mm
30.00<X≤60.00: ±0.60 mm
60.00<X≤150.00: ±1.00 mm
unless otherwise noted

DESCRIPTION	MATERIAL	PLATING/COLOR
housing	PA66 (UL94V-0)	
contacts	copper alloy	nickel
wire screws	steel	zinc
block	copper alloy	nickel

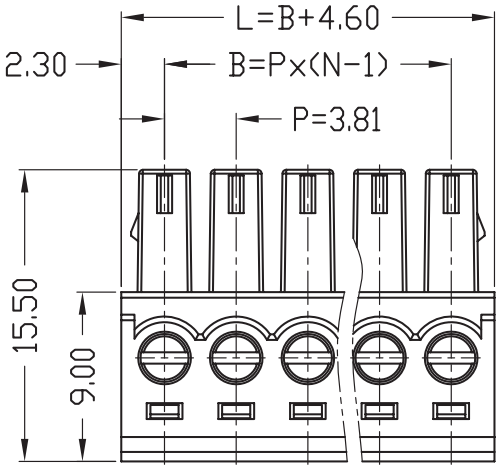

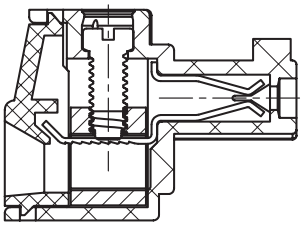

SECTION A-A

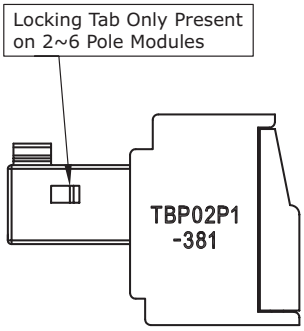

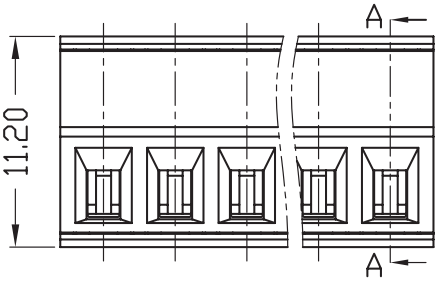

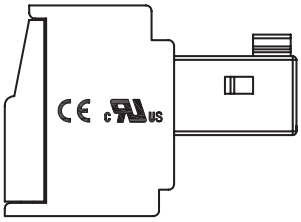

WIRE ASSEMBLY		
	UL	IEC
Wire Range	28~16 AWG	1.5 mm²
Strip Length	7 mm	
Screw Size	M2	
Screw Torque	0.2 N·m	

This series is constructed of single piece modules where L is the total length, P is the pitch, and N is the number of poles.												
N	02	03	04	05	06	07	08	09	10	11	12	13
L	8.41	12.22	16.03	19.84	23.65	27.46	31.27	35.08	38.89	42.70	46.51	50.32
B	3.81	7.62	11.43	15.24	19.05	22.86	26.67	30.48	34.29	38.10	41.91	45.72
N	14	15	16	17	18	19	20	21	22	23	24	--
L	54.13	57.94	61.75	65.56	69.37	73.18	76.99	80.80	84.61	88.42	92.23	--
B	49.53	53.34	57.15	60.96	64.77	68.58	72.39	76.20	80.01	83.82	87.63	--

REVISION HISTORY

rev.	description	date
1.0	initial release	03/27/2019
1.01	brand update	02/06/2020
1.02	updated datasheet	04/21/2020
1.03	logo, datasheet style update	08/15/2022
1.04	CUI Devices rebranded to Same Sky	09/12/2024

The revision history provided is for informational purposes only and is believed to be accurate.

same sky

Same Sky offers a one (1) year limited warranty. Complete warranty information is listed on our website.

Same Sky reserves the right to make changes to the product at any time without notice. Information provided by Same Sky is believed to be accurate and reliable. However, no responsibility is assumed by Same Sky for its use, nor for any infringements of patents or other rights of third parties which may result from its use.

Same Sky products are not authorized or warranted for use as critical components in equipment that requires an extremely high level of reliability. A critical component is any component of a life support device or system whose failure to perform can be reasonably expected to cause the failure of the life support device or system, or to affect its safety or effectiveness.

sameskydevices.com