CUI Devices is now Same Sky! Learn More

same sky



# SERIES: TB009-508 | DESCRIPTION: TERMINAL BLOCK

## FEATURES

- 2~24 poles
- horizontal with board
- interlocking (side)
- 5.08 mm pitch
- UL and CE safety approvals





## SPECIFICATIONS

| parameter | conditions/description | min | typ | max | units |
|---|---|---|---|---|---|
| rated voltage (per contact) | UL<br>IEC | | | 300<br>250 | V<br>V |
| rated current (per contact) | UL<br>IEC | | | 20<br>20 | A<br>A |
| withstanding voltage | | | 2500 | | Vac |
| surge voltage | | | | 4000 | V |
| contact resistance | | | | 20 | mΩ |
| insulation resistance | at 500 Vdc | 500 | | | MΩ |
| operating temperature | | -40 | | 105 | °C |
| safety approvals | UL 1059, EN 60998-1:2004, EN 60998-2-1:2004 | | | | |
| flammability rating | UL94V-0 | | | | |
| RoHS | yes | | | | |

## SOLDERABILITY

| parameter | conditions/description | min | typ | max | units |
|---|---|---|---|---|---|
| hand soldering | for maximum 10 seconds | 345 | 350 | 355 | °C |
| wave soldering | for maximum 5 seconds | 255 | 260 | 265 | °C |

## PART NUMBER KEY

**TB009-508 - X XX XX**

- Base Number
- Screw Type: "blank" = Slot; P = Phillips
- No. of Poles: 02 10 18; 03 11 19; 04 12 20; 05 13 21; 06 14 22; 07 15 23; 08 16 24; 09 17
- Color: *BE = blue; GR = green; OR = orange; YL = yellow; GY = gray; BK = black

*Standard housing color is blue. All other colors are subject to higher MOQ. Please inquire with Same Sky sales for details.

## MECHANICAL DRAWING

units: mm
tolerance (per module):
X≤6.00: ±0.25 mm
6.00<X≤30.00: ±0.40 mm
unless otherwise noted

| DESCRIPTION | MATERIAL | PLATING/COLOR |
|---|---|---|
| housing | PA66 (UL94V-0) | |
| contacts | copper alloy | tin |
| screws | steel | zinc |
| block | copper alloy | nickel |

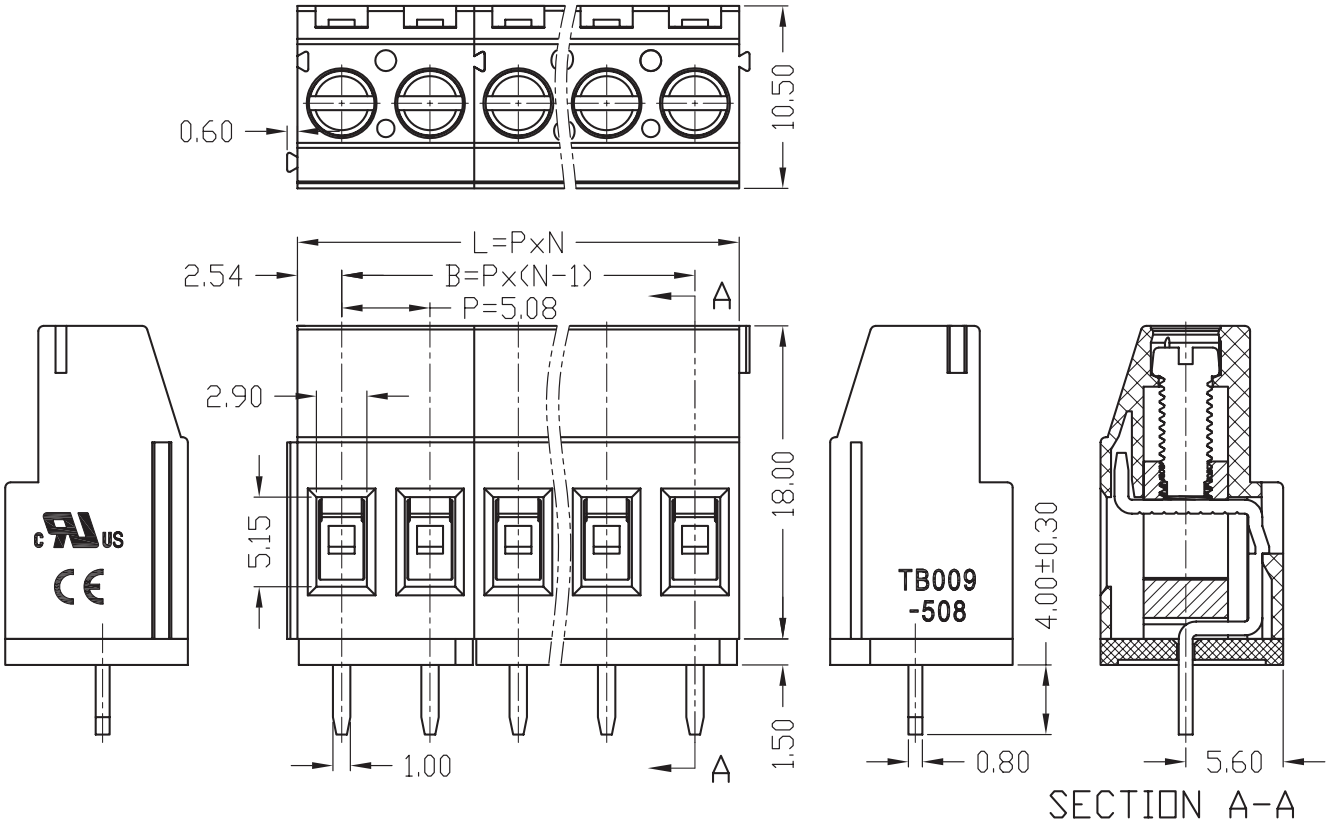


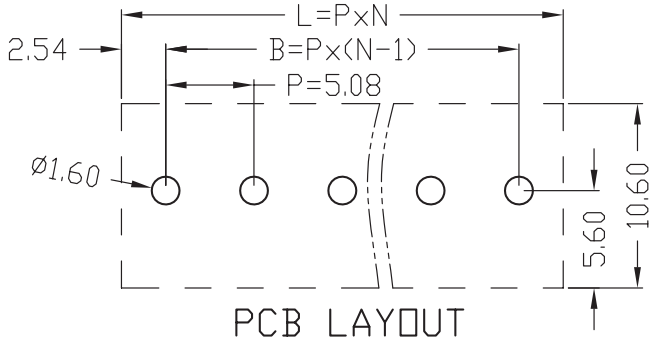


| WIRE ASSEMBLY | | |
|---|---|---|
| | UL | IEC |
| Wire Range | 26~12 AWG | 2.5 mm² |
| Strip Length | 7 mm | |
| Screw Size | M3 | |
| Screw Torque | 0.5 N·m | |

| This series can be constructed of 2 and 3 pole modules where L is the total length, P is the pitch, and N is the number of poles. | | | | | | | | | | | | |
|---|---|---|---|---|---|---|---|---|---|---|---|---|
| N | 02 | 03 | 04 | 05 | 06 | 07 | 08 | 09 | 10 | 11 | 12 | 13 |
| L | 10.16 | 15.24 | 20.32 | 25.40 | 30.48 | 35.56 | 40.64 | 45.72 | 50.80 | 55.88 | 60.96 | 66.04 |
| B | 5.08 | 10.16 | 15.24 | 20.32 | 25.40 | 30.48 | 35.56 | 40.64 | 45.72 | 50.80 | 55.88 | 60.96 |
| N | 14 | 15 | 16 | 17 | 18 | 19 | 20 | 21 | 22 | 23 | 24 | -- |
| L | 71.12 | 76.20 | 81.28 | 86.36 | 91.44 | 96.52 | 101.60 | 106.68 | 111.76 | 116.84 | 121.92 | -- |
| B | 66.04 | 71.12 | 76.20 | 81.28 | 86.36 | 91.44 | 96.52 | 101.60 | 106.68 | 111.76 | 116.84 | -- |

## REVISION HISTORY

| rev. | description | date |
|---|---|---|
| 1.0 | initial release | 03/19/2019 |
| 1.01 | brand update | 02/06/2020 |
| 1.02 | updated datasheet | 04/20/2020 |
| 1.03 | updated housing mold | 08/31/2020 |
| 1.04 | logo, datasheet style update | 08/15/2022 |
| 1.05 | CUI Devices rebranded to Same Sky | 09/12/2024 |

The revision history provided is for informational purposes only and is believed to be accurate.

same sky

Same Sky offers a one (1) year limited warranty. Complete warranty information is listed on our website.

Same Sky reserves the right to make changes to the product at any time without notice. Information provided by Same Sky is believed to be accurate and reliable. However, no responsibility is assumed by Same Sky for its use, nor for any infringements of patents or other rights of third parties which may result from its use.

Same Sky products are not authorized or warranted for use as critical components in equipment that requires an extremely high level of reliability. A critical component is any component of a life support device or system whose failure to perform can be reasonably expected to cause the failure of the life support device or system, or to affect its safety or effectiveness.

**sameskydevices.com**