SY20845A

15V Programmable Current Limit Switch with OVP Clamp

General Description

The SY20845A is a programmable current limit switch with input voltage range selection and output voltage clamping. Extremely low $R_{DS(ON)}$ of the integrated protection N-channel MOSFET helps to reduce power loss during normal operation. The programmable soft-start time controls the slew rate of the output voltage during the start-up time.

The SY20845A uses an enable control for system sequencing. The programmable current limit can be configured using an external resistor. The device integrates short-circuit and over-temperature protections.

The SY20845A is available in a compact DFN 3mmx3mm-10pin package.

Features

- Input Voltage Range: 2.5V to 15V with Surge Up to 30V
- Programmable Current Limit
- Low $R_{DS(ON)}$ for the Integrated Protection Switch: 40 mΩ
- Programmable Soft-Start Time
- Short Circuit Protection
- Selectable Input Range and Clamping Output Voltage Threshold.
- Enable Interface Pin
- Thermal Shutdown Protection & Auto Recovery
- RoHS Compliant and Halogen Free
- Compact Package: DFN3×3-10

Applications

- Notebook PCs
- Servers
- Service PCs

Typical Application Circuit

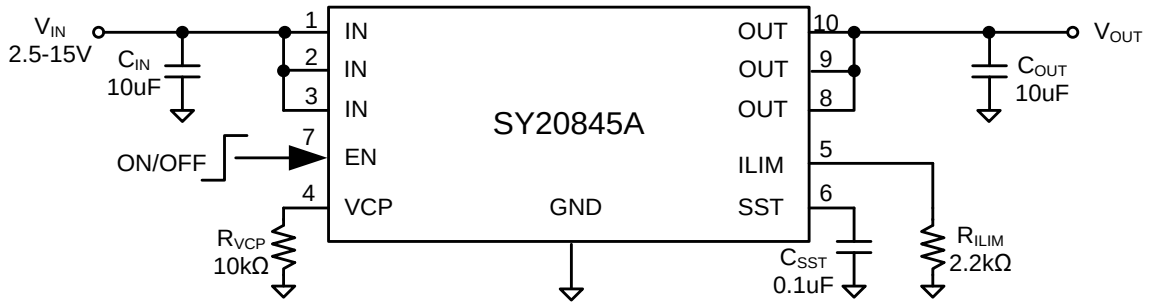

Figure 1. Schematic Diagram

© 2018 Silergy Corp. All Rights Reserved.

Ordering Information

Ordering Number	Package Type	Top Mark
SY20845ADBC	DFN3x3-10 RoHS Compliant and Halogen Free	**FN*xyz***

Device code: FN
x=year code, y=week code, z= lot number code

Pinout (Top View)

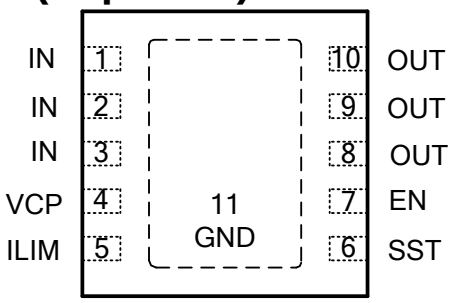

Pin Name	Pin Number	Pin Description
IN	1,2,3	Power input pin. Decouple high frequency noise by connecting at least a 0.1μF MLCC to ground.
GND	11(exposed pad)	Ground pin.
OUT	8,9,10	Power output pins.
ILIM	5	Current limit program pin. Program the current limit by connecting a resistor to ground.
SST	6	Soft-start time program pin. Connect a capacitor to ground to program the soft-start time.
EN	7	Enable interface pin. Pull it High to enable the IC.
VCP	4	Output clamp voltage selection based on the input voltage. Pull VCP pin to High by connecting a resistor ≤ 10kΩ to IN, or pull VCP pin to Low by connecting a resistor ≤ 10kΩ to ground, or float VCP Pin to select different output clamping thresholds. It's recommended to decouple this pin with 0.1uF capacitor.

VCP	IN		Clamping Threshold		
			Min	Typ	Max
Low	3.3V	Over 4V	3.6V	3.8V	4.0V
High	5V	Over 6V	5.4V	5.7V	6.0V
Open	12V	Over 14V	12.6V	13.3V	14V

Block Diagram

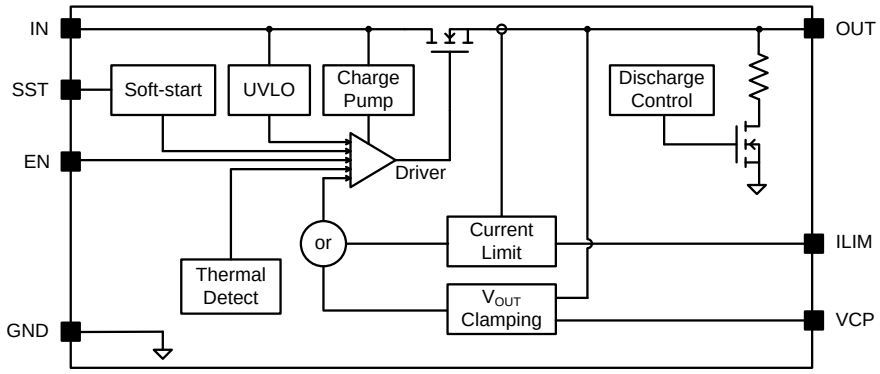

Figure 2. Block Diagram

© 2018 Silergy Corp. All Rights Reserved.

Absolute Maximum Ratings

Parameter (Note 1)	Min	Max	Unit
IN, EN, VCP		30	V
Lead Temperature (Soldering, 10s)		260	°C
Junction Temperature, Operating	-40	150	
Storage Temperature	-65	150	

Thermal Information

Parameter (Note 2)	Typ	Unit
θ_{JA} Junction-to-Ambient Thermal Resistance	38	°C/W
θ_{JC} Junction-to-Case Thermal Resistance	8	
P_D Power Dissipation T_A = 25°C	2.6	W

Recommended Operating Conditions

Parameter (Note 3)	Min	Max	Unit
Supply Input Voltage	2.5	15	V
Junction Temperature, Operating	-40	125	°C
Ambient Temperature	-40	85	

Electrical Characteristics

(V_{IN} = 5V, R_{LIM}=10kΩ, C_{SST}=105nF, C_{IN} = 10μF, C_{OUT} = 10μF, T_A = 25°C, unless otherwise specified)

Parameter	Symbol	Test Conditions	Min	Typ	Max	Unit
Input Voltage Range	V_{IN}		2.5		30	V
Input UVLO Threshold	V_{UVLO}	VCP=LOW	2.2		2.4	V
		VCP=HIGH	3.4		3.8	V
		VCP=OPEN	8.1		9.0	V
UVLO Hysteresis	V_{HYS}	VCP=LOW	0.05	0.085	0.13	V
		VCP=HIGH	0.06	0.095	0.15	
		VCP=OPEN	0.1	0.19	0.29	
Bias Current	I_{BIAS}			200		μA
Shutdown Current	I_{SHDN}	EN=0		10		μA
Protection FET RON	$R_{DS(ON)}$			40	70	mΩ
Current Limit Accuracy				±30%I_{LIM}		
Current Limit Program Range	I_{LIM}	(Note 5)	1		5	A
Clamping Output Voltage	V_{CLP}	VCP=LOW	3.6	3.8	4.0	V
		VCP=HIGH	5.4	5.7	6.0	V
		VCP=OPEN	12.6	13.3	14.0	V
Soft-start Time	t_{SST}	C_{SST}=105nF (Note 4)		29.4		ms
Soft-start Time Accuracy				±30%t_{SST}		
EN Turn-on Threshold	V_{EN_ON}		2			V
EN Turn-off Threshold	V_{EN_OFF}				0.4	V
Output Discharge Resistor	R_{DIS}	EN='0'		30		Ω
Thermal Shutdown Temperature	T_{SD}			140		°C
Thermal Shutdown Hysteresis	T_{HYS}			20		°C

© 2018 Silergy Corp. All Rights Reserved.

Note 1: Stresses beyond "Absolute Maximum Ratings" may cause permanent damage to the device. These are for stress ratings. Functional operation of the device at these or any other conditions beyond those indicated in the operational sections of the specifications is not implied. Exposure to absolute maximum rating conditions may affect device reliability.

Note 2: θ_{JA} is measured in the natural convection at T_A = 25°C on a low effective single layer thermal conductivity test board of JEDEC 51-3 thermal measurement standard. Test condition: Device mounted on 2" x 2" FR-4 substrate PCB, 2oz copper, with a recommended pad on the top layer and thermal vias to the bottom layer ground plane.

Note 3: The device is not guaranteed to function outside its operating conditions

Note 4. Recommended Soft-Start Time Programming Table:

SST cap (nF)	None	10	55	105
Rise time (ms)	1.4	2.8	15.4	29.4

Recommended formula for C_{SST} and soft-start time calculation:

$$t_{SST} = \begin{cases} t_{SS_DLT}, No\ \ external\ \ C_{SST} \\ \dfrac{C_{SST}}{I_{INT}}, \quad t_{SST} > t_{SS_DLT} \end{cases}$$

Where, t_{SS_DLT} is the internally fixed default soft-start time of 1.4ms (typ.)

I_{INT} is the internal current source with a value of 3.6uA (typ.).

Note 5. Recommended Current Limit Programming Table:

Current Limit Resistance (kΩ)	11	5.5	4.4	3.7	3.1	2.8	2.4	2.2
Current Limit (A)	1.0	2.0	2.5	3.0	3.5	4.0	4.5	5.0

Equation for R_{LIM} calculation based on the current limit required:

$$R_{LIM} = \frac{11k}{I_{LIM}}(\Omega)$$

© 2018 Silergy Corp. All Rights Reserved.

Typical Performance Characteristics

Programmable Current Limit

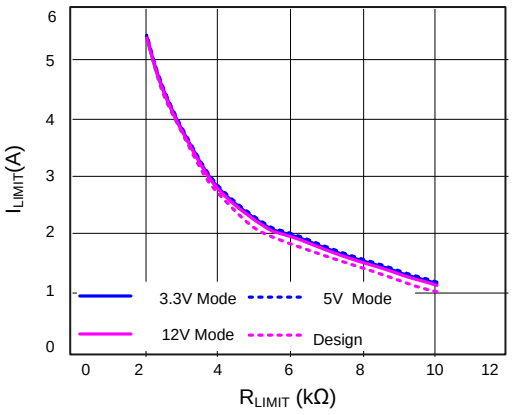

Programmable Soft-start Time

(3.3V Mode, I_O=1A, C_{SST}=100nF)

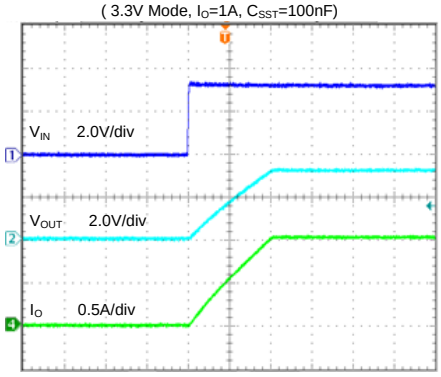

Time (20ms/div)

Shutdown

(3.3V Mode, I_O=1A, C_{SST}=100nF)

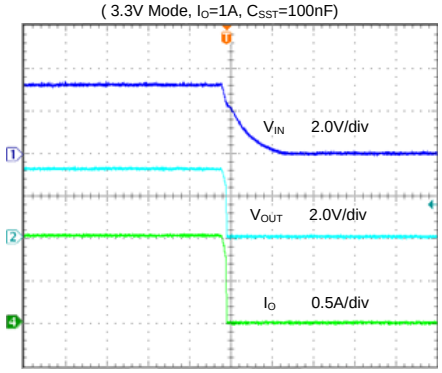

Time (10ms/div)

Programmable Soft-start Time

(5.0V Mode, I_O=1A, C_{SST}=100nF)

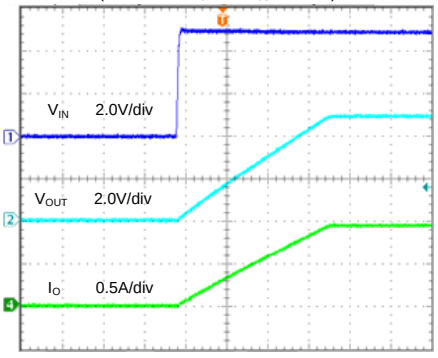

Time (10ms/div)

Shutdown

(5.0V Mode, I_O=1A, C_{SST}=100nF)

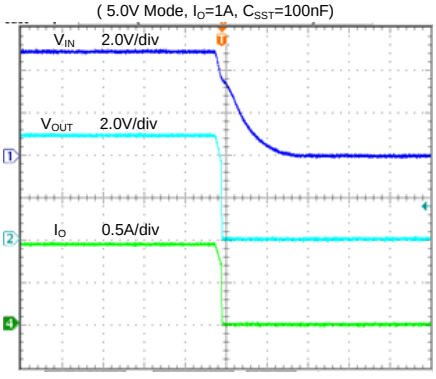

Time (10ms/div)

Programmable Soft-start Time

(12V Mode, I_O=1A, C_{SST}=100nF)

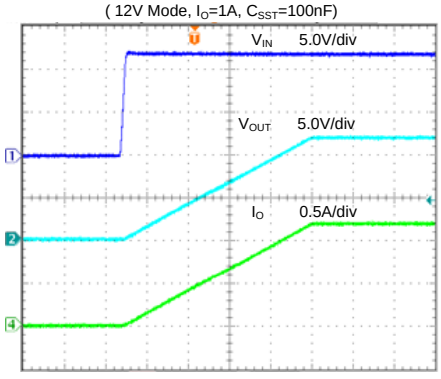

Time (10ms/div)

© 2018 Silergy Corp. All Rights Reserved.

Shutdown

(12V Mode, I_O=1A, C_{SST}=100nF)

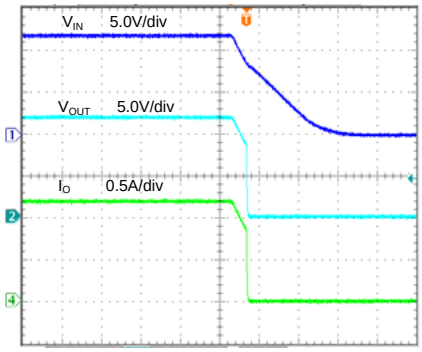

Time (10ms/div)

Over Voltage Protection

(5V Mode, V_{IN}=8V, I_O=0A)

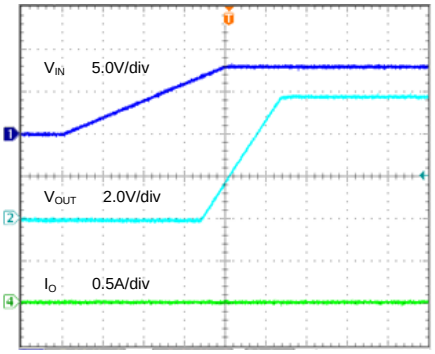

Time (20ms/div)

Over Voltage Protection

(5V Mode, V_{IN}=8V, I_O=1A)

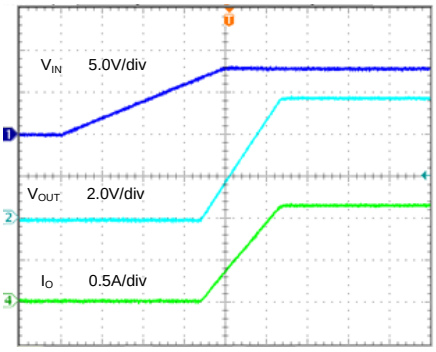

Time (20ms/div)

© 2018 Silergy Corp. All Rights Reserved.

Functional Description

The SY20845A is a current limited N-channel MOSFET power switch designed for high-side load-switching applications. It incorporates extremely low $R_{DS(ON)}$

N-channel MOSFET to reduce power loss during normal operation. The programmable soft-start time controls the slew rate of the output voltage during the start-up time.

Over Current Protection

The SY20845A supports current limit programming. Connect a resistor R_{LIM} from ILIM pin to ground to program the current limit:

$$I_{LIM}=11000/R_{LIM}(\Omega)$$

The minimum current limit is 1A. A current limit beyond 5A is not recommended.

When the over-current condition is sensed, the gate of the pass switch is controlled to achieve constant output current. If the over current condition persists for a long time, the junction temperature may exceed 150°C, and over-temperature protection will shut down the part. Once the chip temperature drops below 130°C, the part will restart.

Over Voltage Protection

The SY20845A integrates an overvoltage protection controlled using the VCP input pin. The output voltage is clamped to 5.7V(typ.) when V_{VCP}=High, to 3.8V(typ.) when V_{VCP}=Low, or 13.3V(typ.) when VCP pin is left open.

Soft Start Time Program

To avoid thermal shutdown during start-up because of large inrush currents caused by downstream system capacitance, it is important to set an appropriate start-up time.

The slew rate (SR) needed to achieve the desired output rise time can be calculated as:

$$t_{SST}=\begin{cases} t_{SS_DLT}, No\ external\ C_{SST} \\ \dfrac{C_{SST}}{I_{INT}}, \quad t_{SST} > t_{SS_DLT} \end{cases}$$

Where, t_{SS_DLT} is the internally fixed default soft-start time of 1.4ms (typ.) and I_{INT} is the internal current source with a value of 3.6uA (typ.).

Supply Filter Capacitor

In order to prevent the input voltage spike which could destroy the internal circuitry when the input transient exceeds the absolute maximum supply voltage during output short or other load transient situation, using a 1μF ceramic capacitor between VIN to GND is strongly recommended. Higher capacitor values could reduce the voltage transients on the input further. For applications were long wiring is used, the capacitor voltage rating must be at least twice the input supply voltage to be able to withstand the positive voltages caused by inductive ringing.

Output Filter Capacitor

A 10μF output ceramic capacitor is recommended to be placed close to the IC and output connector to reduce voltage drop during load transients. Higher values of output capacitor can be used to further reduce the voltage drop during high current step loads.

PCB Layout Guide

For best performance of the SY20845A, the following guidelines must be strictly followed:

1. Keep all VBUS traces as short and wide as possible and use at least 2-ounce copper for all VBUS traces.

2. Locate the output capacitor as close to the connector as possible to lower impedance (mainly inductance) between the port and the capacitor and improve transient performance.

3. Input and output capacitors should be placed close to the IC and connected to ground plane to reduce noise coupling.

© 2018 Silergy Corp. All Rights Reserved.

PCB Layout Guideline

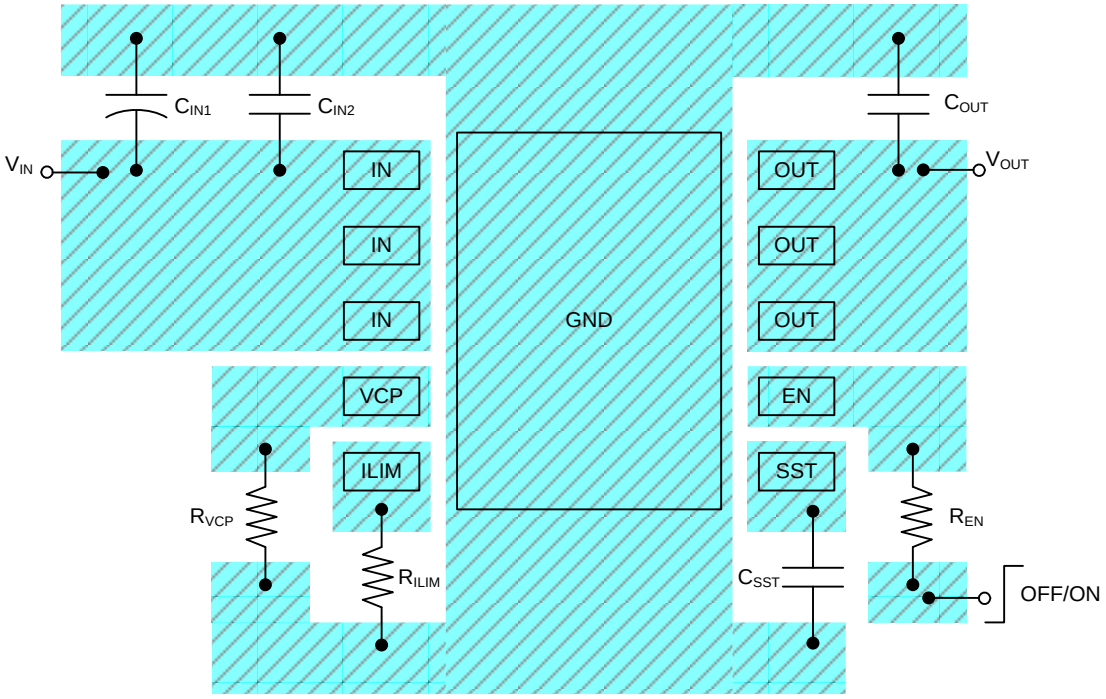

Figure 3. PCB Layout Guideline

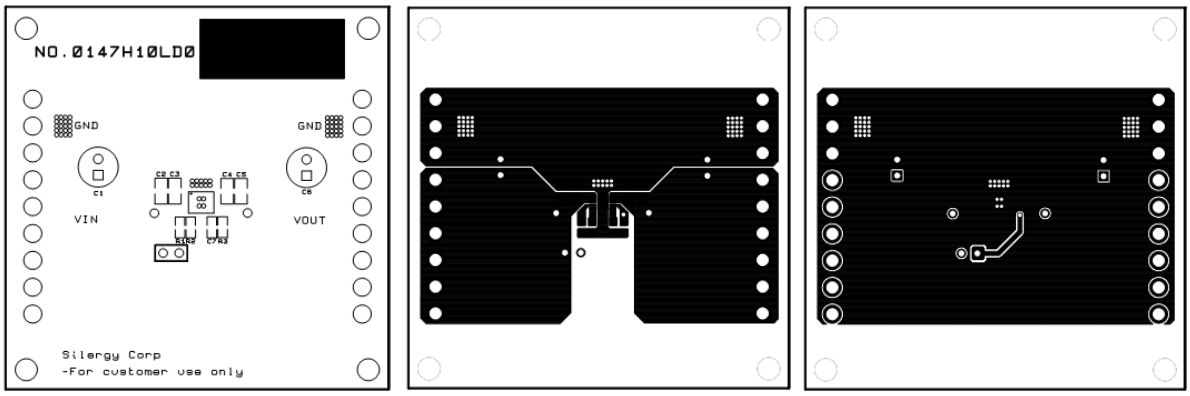

Top Silkscreen **Top Layer** **Bottom Layer**

© 2018 Silergy Corp. All Rights Reserved.

Application Schematic

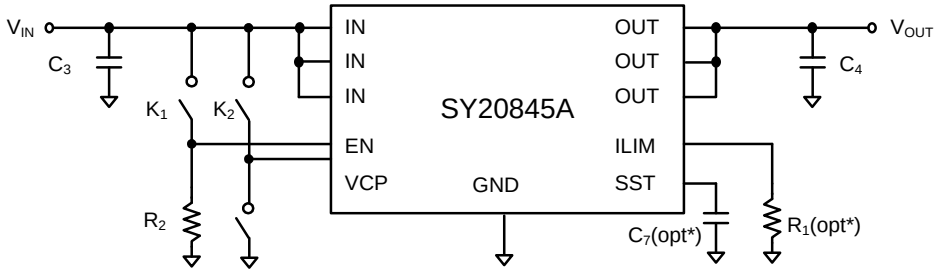

Figure1. Schematic Diagram

BOM List

Reference Designator	Description	Part Number	Manufacturer
U1	Programmable Current Limit Switch	SY20845ADBC	Silergy
C_3,C_4	10uF/25V/X7R,1206	C3225X7R1E106M	TDK
R_1	2.2kΩ, 0603, 1%		
R_2	1MΩ, 0603, 1%		
C_7	0.1uF, 0603		

© 2018 Silergy Corp. All Rights Reserved.

DFN3x3-10 Package Outline

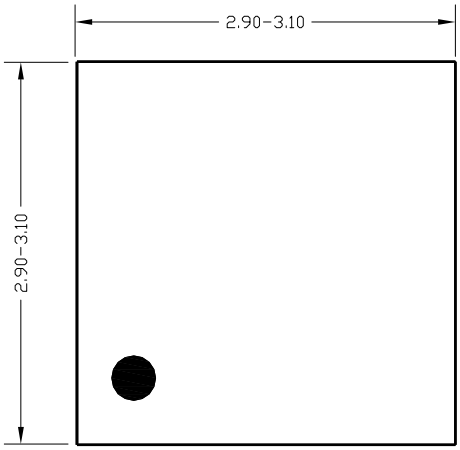

Top View

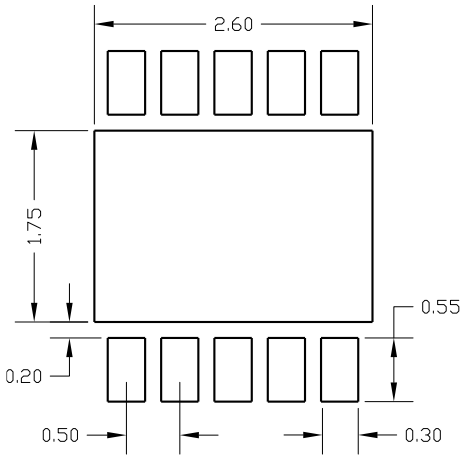

PCB Layout (Recommended)

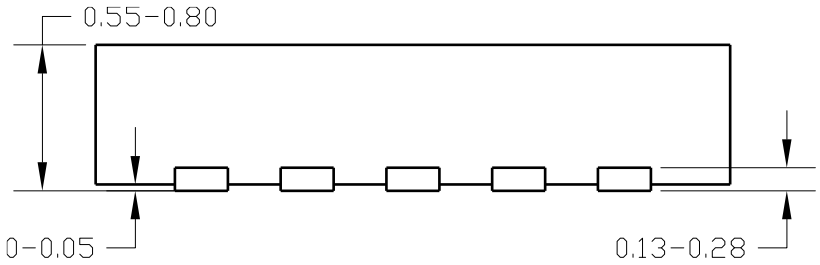

Side View

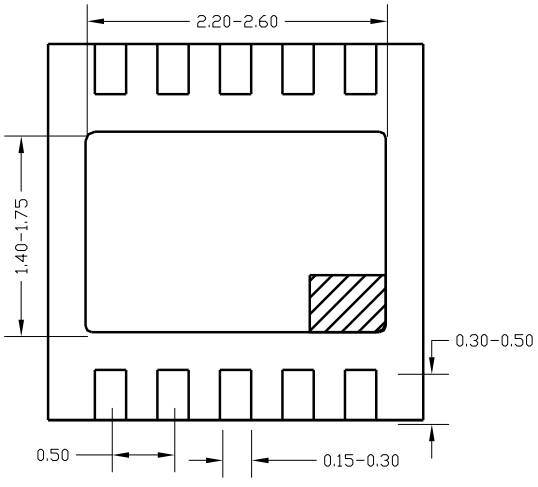

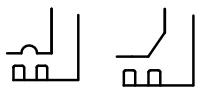

Detail A
Pin1 identifier: two options

Bottom View

Note: All dimensions are in millimeters and exclude mold flash and metal burr.

© 2018 Silergy Corp. All Rights Reserved.

Taping & Reel Specification

1. DFN3x3-10 Taping Orientation

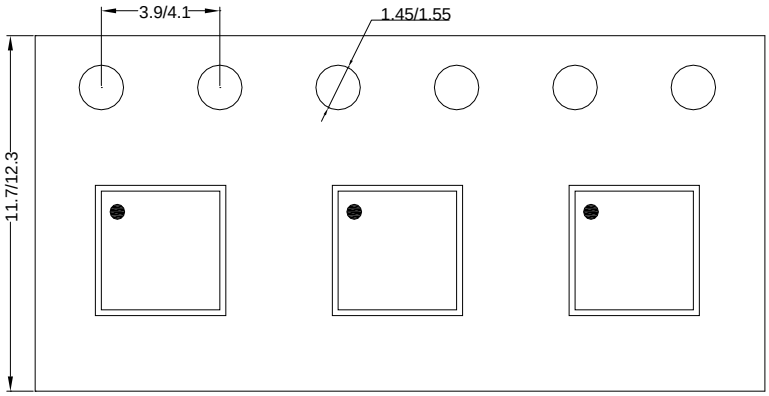

Feeding direction ⟶

2. Carrier Tape & Reel Specification for Packages

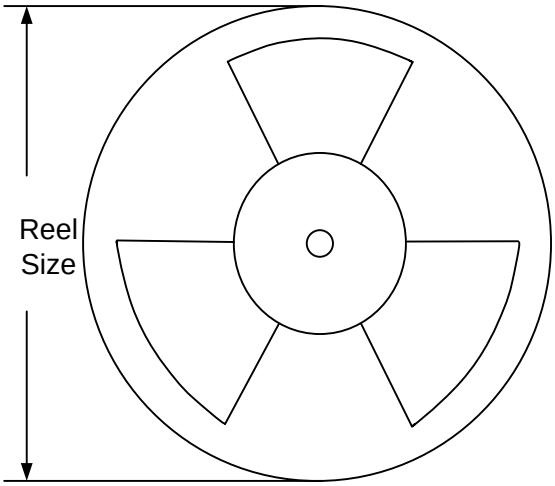

Package types	Tape width (mm)	Pocket pitch (mm)	Reel size (Inch)	Trailer length (mm)	Leader length (mm)	Qty per reel
DFN3x3	10	8	13"	400	400	5000

3. Others: NA

© 2018 Silergy Corp. All Rights Reserved.

IMPORTANT NOTICE

1. **Right to make changes.** Silergy and its subsidiaries (hereafter Silergy) reserve the right to change any information published in this document, including but not limited to circuitry, specification and/or product design, manufacturing or descriptions, at any time and without notice. This document supersedes and replaces all information supplied prior to the publication hereof. Buyers should obtain the latest relevant information before placing orders and should verify that such information is current and complete. All semiconductor products are sold subject to Silergy's standard terms and conditions of sale.

2. Applications. Application examples that are described herein for any of these products are for illustrative purposes only. Silergy makes no representation or warranty that such applications will be suitable for the specified use without further testing or modification. Buyers are responsible for the design and operation of their applications and products using Silergy products. Silergy or its subsidiaries assume no liability for any application assistance or designs of customer products. It is customer's sole responsibility to determine whether the Silergy product is suitable and fit for the customer's applications and products planned. To minimize the risks associated with customer's products and applications, customer should provide adequate design and operating safeguards. Customer represents and agrees that it has all the necessary expertise to create and implement safeguards which anticipate dangerous consequences of failures, monitor failures and their consequences, lessen the likelihood of failures that might cause harm and take appropriate remedial actions. Silergy assumes no liability related to any default, damage, costs or problem in the customer's applications or products, or the application or use by customer's third-party buyers. Customer will fully indemnify Silergy, its subsidiaries, and their representatives against any damages arising out of the use of any Silergy components in safety-critical applications. It is also buyers' sole responsibility to warrant and guarantee that any intellectual property rights of a third party are not infringed upon when integrating Silergy products into any application. Silergy assumes no responsibility for any said applications or for any use of any circuitry other than circuitry entirely embodied in a Silergy product.

3. **Limited warranty and liability.** Information furnished by Silergy in this document is believed to be accurate and reliable. However, Silergy makes no representation or warranty, expressed or implied, as to the accuracy or completeness of such information and shall have no liability for the consequences of use of such information. In no event shall Silergy be liable for any indirect, incidental, punitive, special or consequential damages, including but not limited to lost profits, lost savings, business interruption, costs related to the removal or replacement of any products or rework charges, whether or not such damages are based on tort or negligence, warranty, breach of contract or any other legal theory. Notwithstanding any damages that customer might incur for any reason whatsoever, Silergy' aggregate and cumulative liability towards customer for the products described herein shall be limited in accordance with the Standard Terms and Conditions of Sale of Silergy.

4. **Suitability for use.** Customer acknowledges and agrees that it is solely responsible for compliance with all legal, regulatory and safety-related requirements concerning its products, and any use of Silergy components in its applications, notwithstanding any applications-related information or support that may be provided by Silergy. Silergy products are not designed, authorized or warranted to be suitable for use in life support, life-critical or safety-critical systems or equipment, nor in applications where failure or malfunction of a Silergy product can reasonably be expected to result in personal injury, death or severe property or environmental damage. Silergy assumes no liability for inclusion and/or use of Silergy products in such equipment or applications and therefore such inclusion and/or use is at the customer's own risk.

5. **Terms and conditions of commercial sale**. Silergy products are sold subject to the standard terms and conditions of commercial sale, as published at http://www.silergy.com/stdterms, unless otherwise agreed in a valid written individual agreement specifically agreed to in writing by an authorized officer of Silergy. In case an individual agreement is concluded only the terms and conditions of the respective agreement shall apply. Silergy hereby expressly objects to and denies the application of any customer's general terms and conditions with regard to the purchase of Silergy products by the customer.

6. **No offer to sell or license**. Nothing in this document may be interpreted or construed as an offer to sell products that is open for acceptance or the grant, conveyance or implication of any license under any copyrights, patents or other industrial or intellectual property rights. Silergy makes no representation or warranty that any license, either express or implied, is granted under any patent right, copyright, mask work right, or other intellectual property right. Information published by Silergy regarding third-party products or services does not constitute a license to use such products or services or a warranty or endorsement thereof. Use of such information may require a license from a third party under the patents or other intellectual property of the third party, or a license from Silergy under the patents or other intellectual property of Silergy.

For more information, please visit: www.silergy.com

© 2018 Silergy Corp. **All Rights Reserved.**

© 2018 Silergy Corp. All Rights Reserved.