CUI Devices is now Same Sky! Learn More

SERIES: SJ-4351X | DESCRIPTION: AUDIO JACK

FEATURES

- PCB mount
- plastic bushing
- low profile design

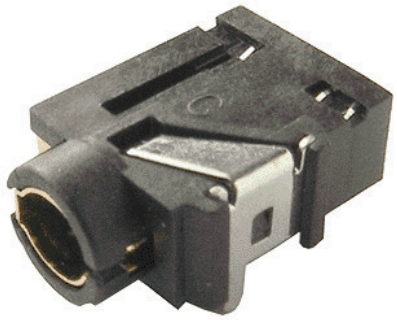

RoHS

PART NUMBER KEY

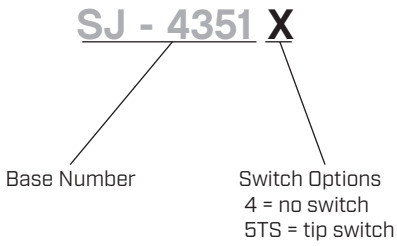

SPECIFICATIONS

parameter	conditions/description	min	typ	max	units
rated input voltage			16		Vdc
rated input current				300	mA
contact resistance*	between terminal and mating plug between terminal in a closed circuit			50 30	mΩ mΩ
insulation resistance	at 500 Vdc	100			MΩ
voltage withstand	at 50/60Hz for 1 minute			500	Vac
insertion/withdrawal force		0.4		3	kg
terminal strength	any direction for 10 seconds			500	g
operating temperature		-25		85	°C
life			5,000		cycles
RoHS	yes				

Notes: *When measured at a current of less than 100 mA / 1 kHz

SOLDERABILITY

parameter	conditions/description	min	typ	max	units
wave soldering	dipped in solder pot for 5±0.5 seconds at	255	260	265	°C

MECHANICAL DRAWING

units: mm[inches]

TOLERANCE:
X.X ±0.2mm
X.XX ±0.1mm
X.XXX ±0.05mm

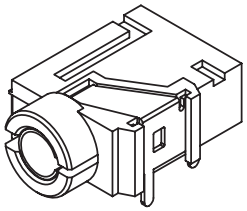

	MATERIAL	PLATING
terminal 1	phosphor bronze	gold
terminal 2	titanium copper	tin
terminal 3	phosphor bronze	tin
terminal 4	phosphor bronze	tin
terminal 5	brass	tin
plastic	PA66	

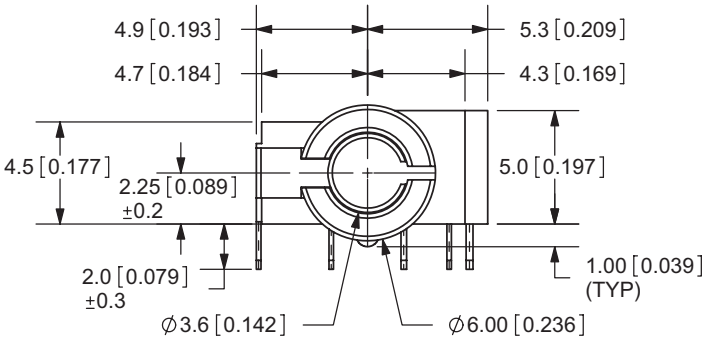

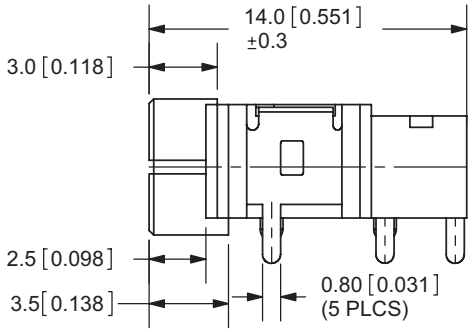

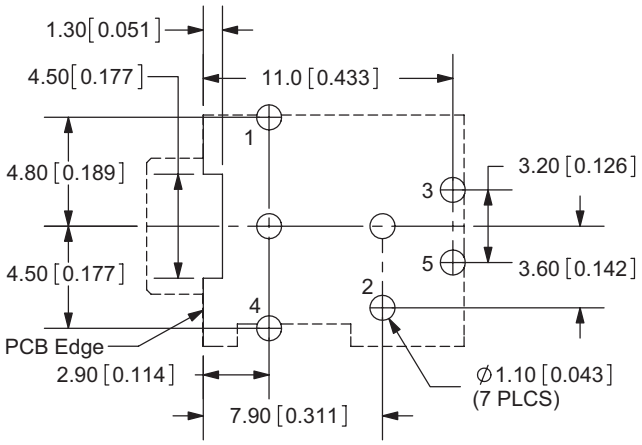

PCB LAYOUT
TOP VIEW

NOTE: Tolerance for PCB Layout is ± 0.05mm

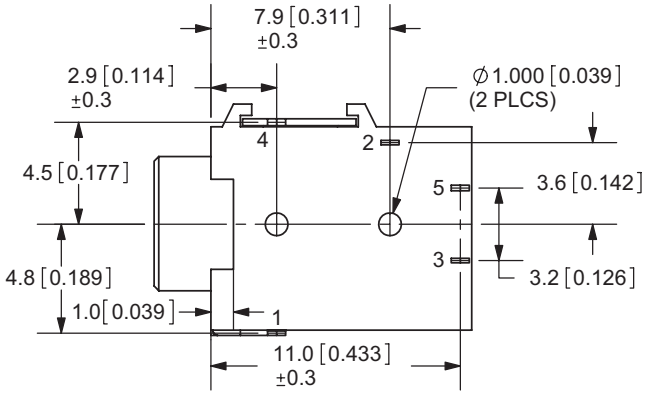

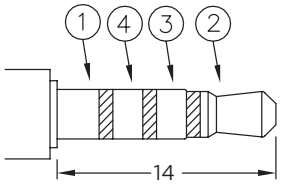

Ø 3.5 MATING PLUG

Model No.	SJ-43514	SJ-43515TS
Schematic	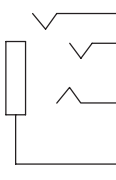	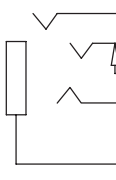
PIN		
1	sleeve	sleeve
2	tip	tip
3	ring 1	ring 1
4	ring 2	ring 2
5	NP	tip switch

REVISION HISTORY

rev.	description	date
1.0	initial release	05/01/2006
1.01	new template applied	02/21/2012
1.02	pin numbering changed	03/09/2012
1.03	added notch to pcb layout	04/05/2012
1.04	updated drawing	06/05/2012
1.05	brand update	01/31/2020
1.06	CUI Devices rebranded to Same Sky	09/12/2024

The revision history provided is for informational purposes only and is believed to be accurate.

same sky

Same Sky offers a one (1) year limited warranty. Complete warranty information is listed on our website.

Same Sky reserves the right to make changes to the product at any time without notice. Information provided by Same Sky is believed to be accurate and reliable. However, no responsibility is assumed by Same Sky for its use, nor for any infringements of patents or other rights of third parties which may result from its use.

Same Sky products are not authorized or warranted for use as critical components in equipment that requires an extremely high level of reliability. A critical component is any component of a life support device or system whose failure to perform can be reasonably expected to cause the failure of the life support device or system, or to affect its safety or effectiveness.

sameskydevices.com