CUI Devices is now Same Sky! Learn More

same sky

Additional Resources: Product Page | 3D Model | PCB Footprint

SERIES: RDS4-1012-RA-67 | DESCRIPTION: ROTARY DIP SWITCH

FEATURES

- 4, 8, 10, & 16 positions
- right angle
- IP67



RoHS IP67

SPECIFICATIONS

parameter	conditions/description	min	typ	max	units
rated voltage	switching non-switching			42 42	Vdc Vdc
rated current	switching non-switching			150 200	mA mA
withstanding voltage	for 1 minute		250		Vac
contact resistance				80	mΩ
insulation resistance	for 1 minute at 250 Vdc	100			MΩ
operating torque				700	gf*cm
actuator travel	continuous rotation		360		degrees
operating temperature		-40		85	°C
storage temperature		-40		85	°C
life	at 42 Vdc, 150 mA, 15~20 cycles/minute		10,000		steps
flammability rating	see material tables				
RoHS	yes				
IP level	IP67				

SOLDERABILITY

parameter	conditions/description	min	typ	max	units
hand soldering	for maximum 3 seconds			350	°C
wave soldering	for maximum 5 seconds			260	°C

PART NUMBER KEY

RDS4 - XXS - 1012 - 73 - RA - XXX - D - 67

- RDS4: Base Number
- XXS: No. of Positions:
  4 = 4 Positions
  8 = 8 Positions
  10 = 10 Positions
  16 = 16 Positions
- XXX: Pitch:
  254 = 2.54 mm
  508 = 5.08 mm

MECHANICAL DRAWING (4 POSITION, 2.54 MM PITCH)

units: mm
tolerance: ±0.3 mm
unless otherwise specified

DESCRIPTION	MATERIAL	PLATING/COLOR
actuator	POM (UL94HB)	gray
cover	PA66 (UL94V-0)	light white
base	PA66 (UL94V-0)	black
terminals	phosphorus bronze	Ni/Au

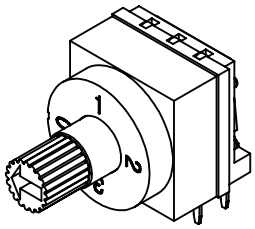

ON ●				
OFF ○		CODE		
TYPE	POS	C	1	2
4 POSITION	0	●	○	○
	1	●	●	○
	2	●	○	●
	3	●	●	●

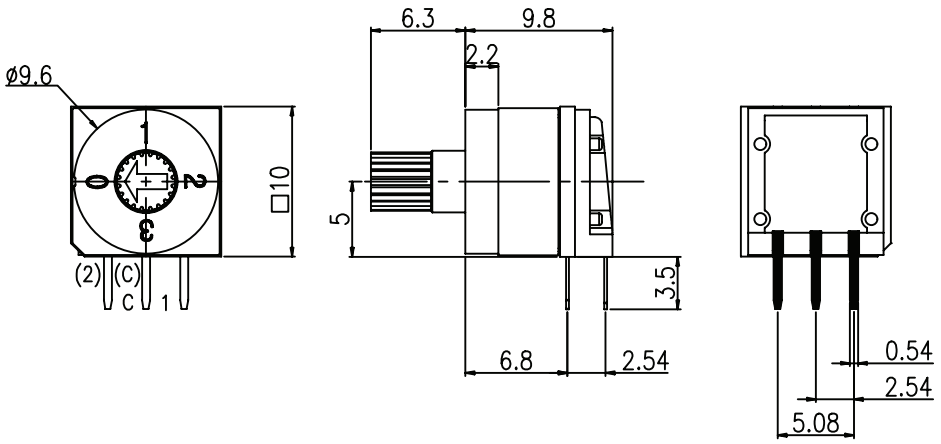

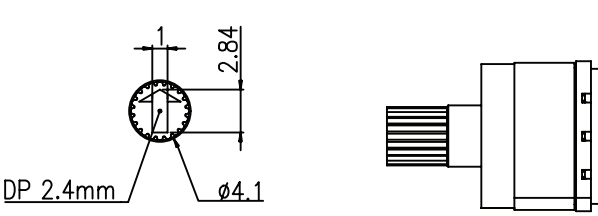

ACTUATOR

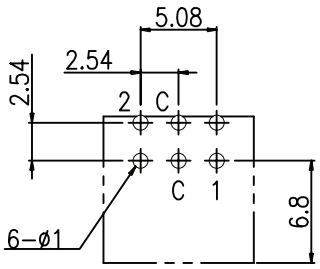

Recommended PCB Layout
Top View

MECHANICAL DRAWING (8 POSITION, 2.54 MM PITCH)

units: mm
tolerance: ±0.3 mm
unless otherwise specified

DESCRIPTION	MATERIAL	PLATING/COLOR
actuator	POM (UL94HB)	gray
cover	PA66 (UL94V-0)	light white
base	PA66 (UL94V-0)	black
terminals	phosphorus bronze	Ni/Au

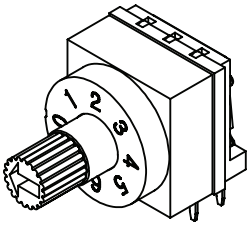

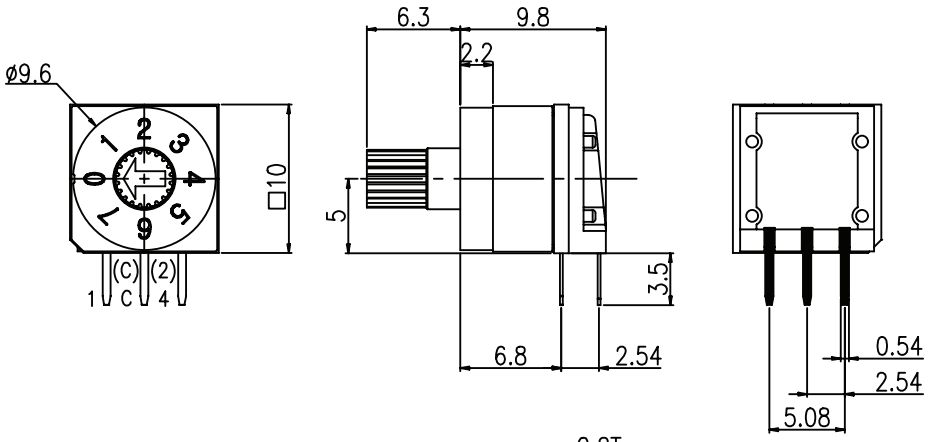

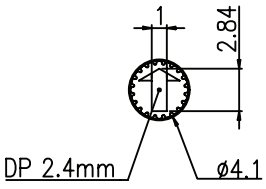

ACTUATOR

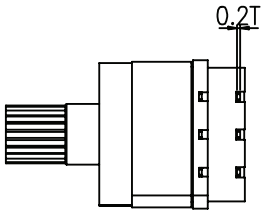

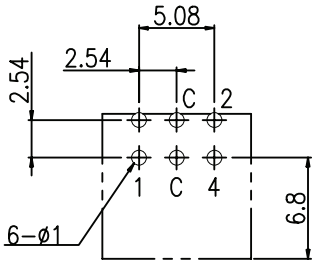

Recommended PCB Layout
Top View

ON ●					
OFF ○		CODE			
TYPE	POS	C	1	2	4
8 POSITION	0	●	○	○	○
	1	●	●	○	○
	2	●	○	●	○
	3	●	●	●	○
	4	●	○	○	●
	5	●	●	○	●
	6	●	○	●	●
	7	●	●	●	●

MECHANICAL DRAWING (10 POSITION, 2.54 MM PITCH)

units: mm
tolerance: ±0.3 mm
unless otherwise specified

DESCRIPTION	MATERIAL	PLATING/COLOR
actuator	POM (UL94HB)	gray
cover	PA66 (UL94V-0)	light white
base	PA66 (UL94V-0)	black
terminals	phosphorus bronze	Ni/Au

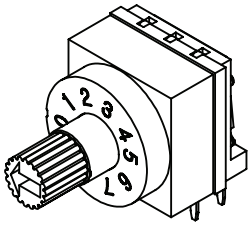

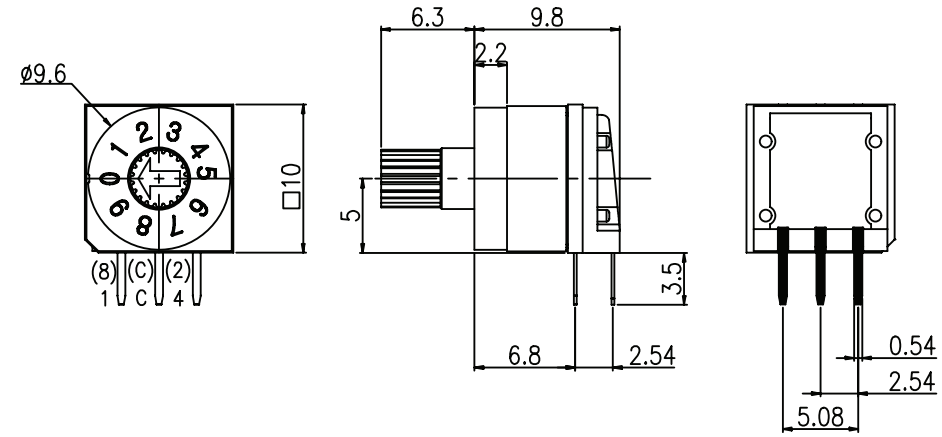

ON ●						
OFF ○		CODE				
TYPE	POS	C	1	2	4	8
10 POSITION	0	●	○	○	○	○
	1	●	●	○	○	○
	2	●	○	●	○	○
	3	●	●	●	○	○
	4	●	○	○	●	○
	5	●	●	○	●	○
	6	●	○	●	●	○
	7	●	●	●	●	○
	8	●	○	○	○	●
	9	●	●	○	○	●

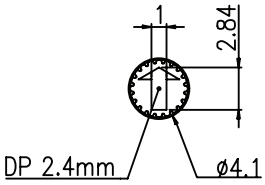

ACTUATOR

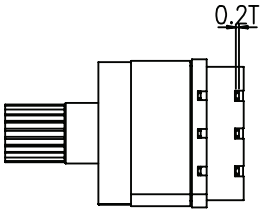

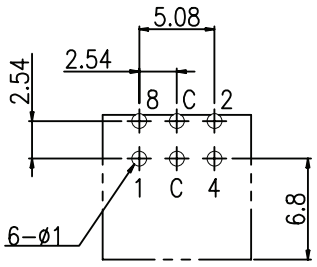

Recommended PCB Layout
Top View

MECHANICAL DRAWING (16 POSITION, 2.54 MM PITCH)

units: mm
tolerance: ±0.3 mm
unless otherwise specified

DESCRIPTION	MATERIAL	PLATING/COLOR
actuator	POM (UL94HB)	gray
cover	PA66 (UL94V-0)	light white
base	PA66 (UL94V-0)	black
terminals	phosphorus bronze	Ni/Au

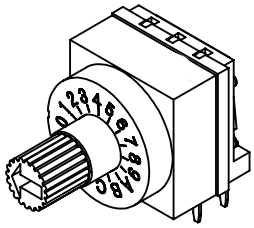

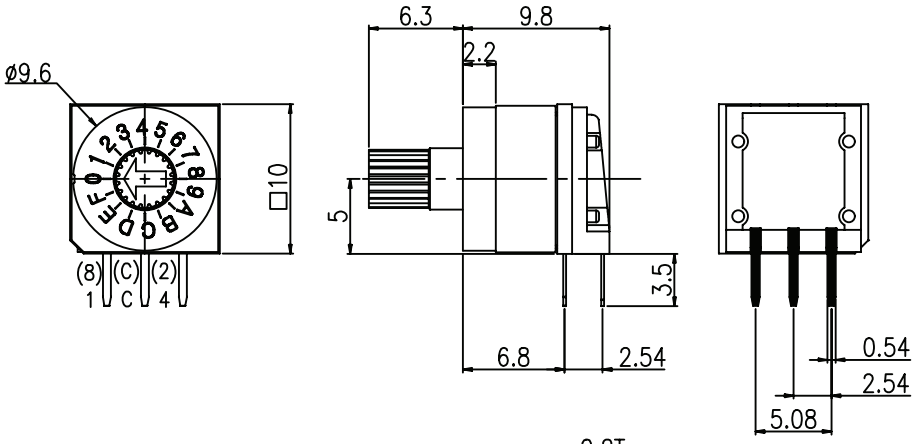

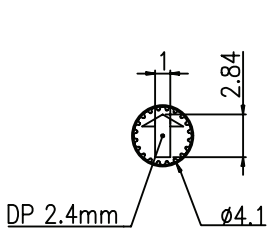

ACTUATOR

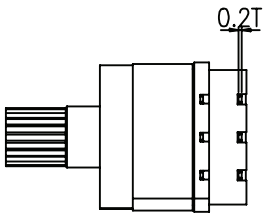

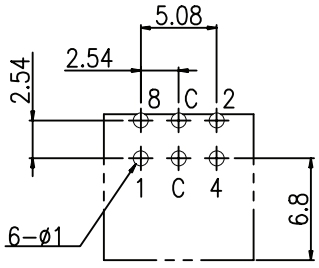

Recommended PCB Layout
Top View

ON ●						
OFF ○		CODE				
TYPE	POS	C	1	2	4	8
16 POSITION	0	●	○	○	○	○
	1	●	●	○	○	○
	2	●	○	●	○	○
	3	●	●	●	○	○
	4	●	○	○	●	○
	5	●	●	○	●	○
	6	●	○	●	●	○
	7	●	●	●	●	○
	8	●	○	○	○	●
	9	●	●	○	○	●
	A	●	○	●	○	●
	B	●	●	●	○	●
	C	●	○	○	●	●
	D	●	●	○	●	●
	E	●	○	●	●	●
	F	●	●	●	●	●

MECHANICAL DRAWING (4 POSITION, 5.08 MM PITCH)

units: mm
tolerance: ±0.3 mm
unless otherwise specified

DESCRIPTION	MATERIAL	PLATING/COLOR
actuator	POM (UL94HB)	gray
cover	PA66 (UL94V-0)	light white
base	PA66 (UL94V-0)	black
terminals	phosphorus bronze	Ni/Au

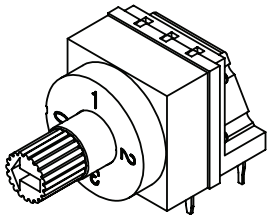

ON ●				
OFF ○		CODE		
TYPE	POS	C	1	2
4 POSITION	0	●	○	○
	1	●	●	○
	2	●	○	●
	3	●	●	●

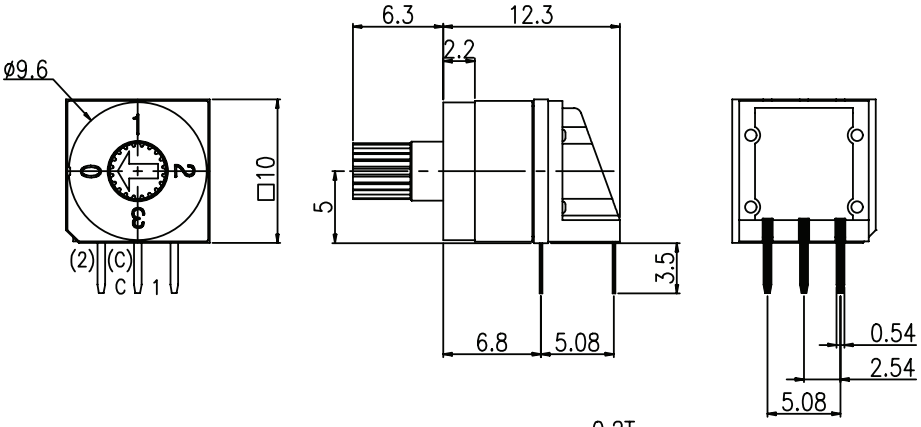

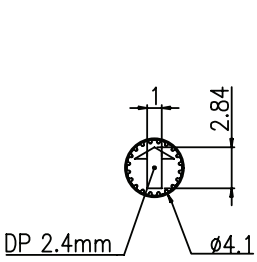

ACTUATOR

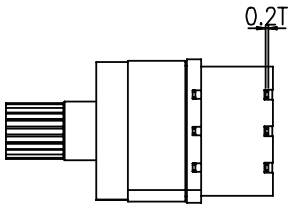

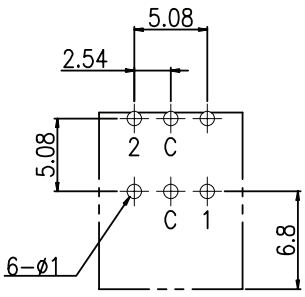

Recommended PCB Layout
Top View

MECHANICAL DRAWING (8 POSITION, 5.08 MM PITCH)

units: mm
tolerance: ±0.3 mm
unless otherwise specified

DESCRIPTION	MATERIAL	PLATING/COLOR
actuator	POM (UL94HB)	gray
cover	PA66 (UL94V-0)	light white
base	PA66 (UL94V-0)	black
terminals	phosphorus bronze	Ni/Au

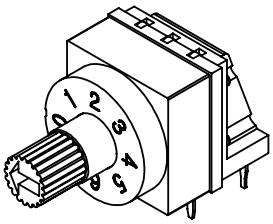

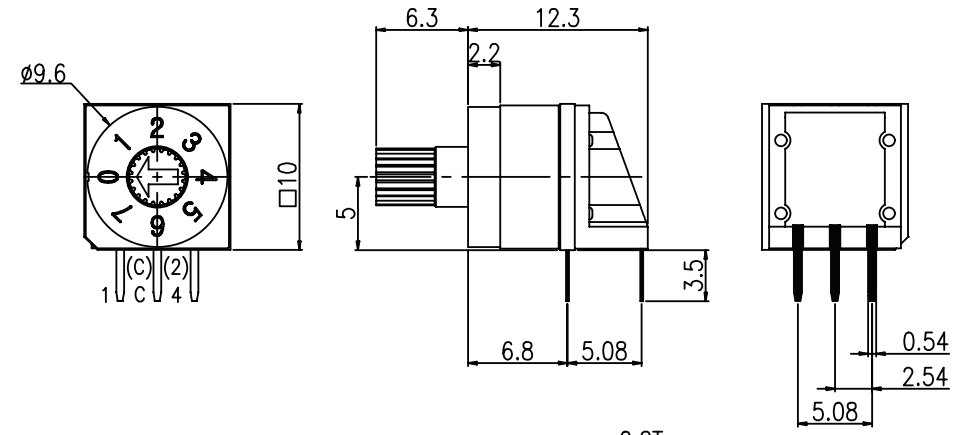

ON ●					
OFF ○		CODE			
TYPE	POS	C	1	2	4
8 POSITION	0	●	○	○	○
	1	●	●	○	○
	2	●	○	●	○
	3	●	●	●	○
	4	●	○	○	●
	5	●	●	○	●
	6	●	○	●	●
	7	●	●	●	●

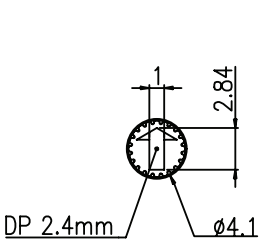

ACTUATOR

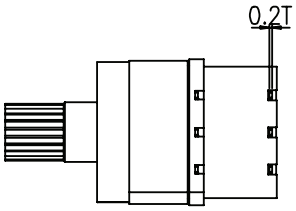

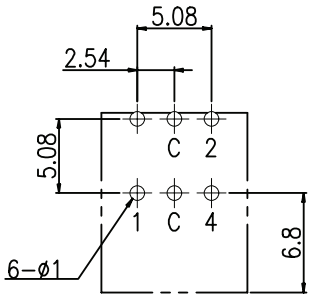

Recommended PCB Layout
Top View

MECHANICAL DRAWING (10 POSITION, 5.08 MM PITCH)

units: mm
tolerance: ±0.3 mm
unless otherwise specified

DESCRIPTION	MATERIAL	PLATING/COLOR
actuator	POM (UL94HB)	gray
cover	PA66 (UL94V-0)	light white
base	PA66 (UL94V-0)	black
terminals	phosphorus bronze	Ni/Au

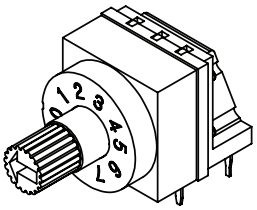

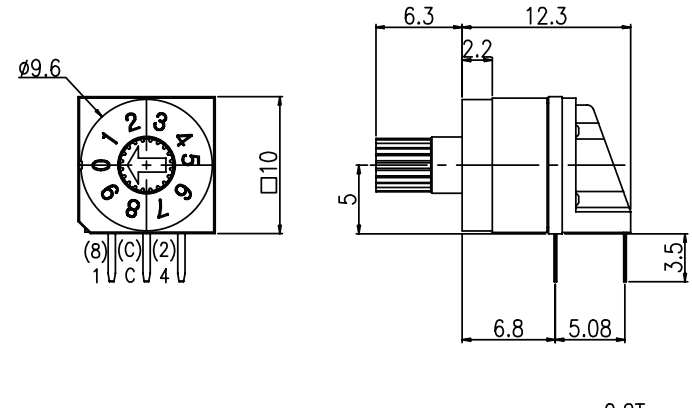

ON ●						
OFF ○		CODE				
TYPE	POS	C	1	2	4	8
10 POSITION	0	●	○	○	○	○
	1	●	●	○	○	○
	2	●	○	●	○	○
	3	●	●	●	○	○
	4	●	○	○	●	○
	5	●	●	○	●	○
	6	●	○	●	●	○
	7	●	●	●	●	○
	8	●	○	○	○	●
	9	●	●	○	○	●

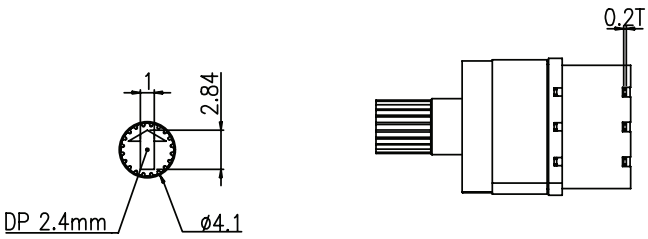

ACTUATOR

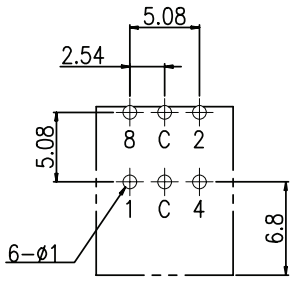

Recommended PCB Layout
Top View

MECHANICAL DRAWING (16 POSITION, 5.08 MM PITCH)

units: mm
tolerance: ±0.3 mm
unless otherwise specified

DESCRIPTION	MATERIAL	PLATING/COLOR
actuator	POM (UL94HB)	gray
cover	PA66 (UL94V-0)	light white
base	PA66 (UL94V-0)	black
terminals	phosphorus bronze	Ni/Au

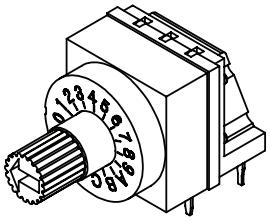

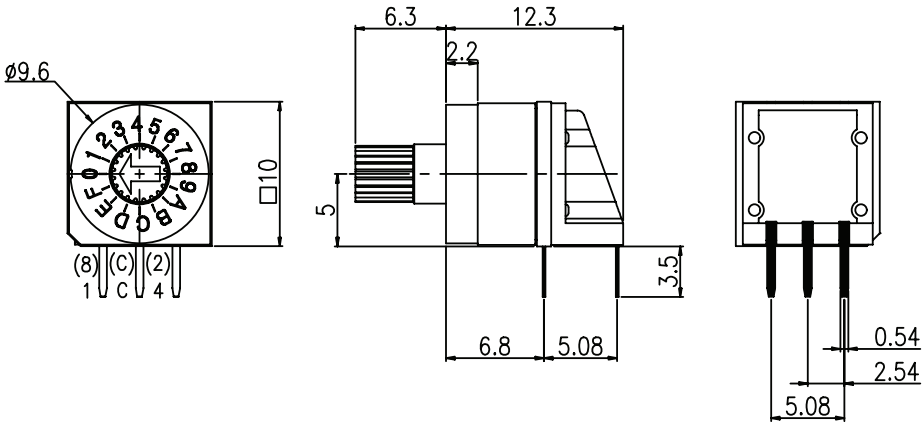

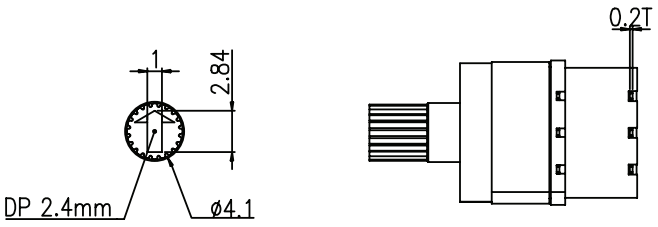

ACTUATOR

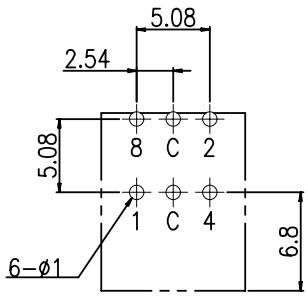

Recommended PCB Layout
Top View

ON ●						
OFF ○		CODE				
TYPE	POS	C	1	2	4	8
16 POSITION	0	●	○	○	○	○
	1	●	●	○	○	○
	2	●	○	●	○	○
	3	●	●	●	○	○
	4	●	○	○	●	○
	5	●	●	○	●	○
	6	●	○	●	●	○
	7	●	●	●	●	○
	8	●	○	○	○	●
	9	●	●	○	○	●
	A	●	○	●	○	●
	B	●	●	●	○	●
	C	●	○	○	●	●
	D	●	●	○	●	●
	E	●	○	●	●	●
	F	●	●	●	●	●

PACKAGING

units: mm

Tube Size: 16.2 x 21.5 x 540 mm
Tube QTY: 50 pcs per tube

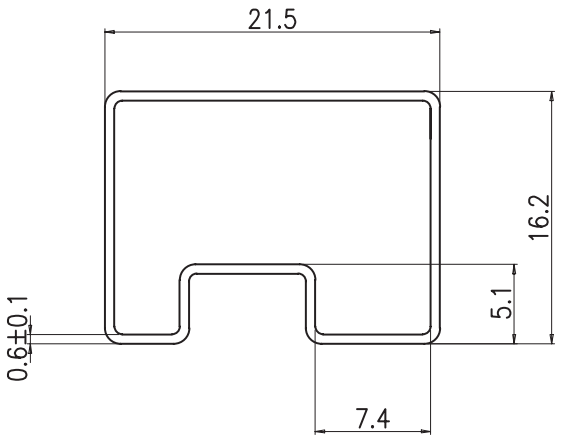

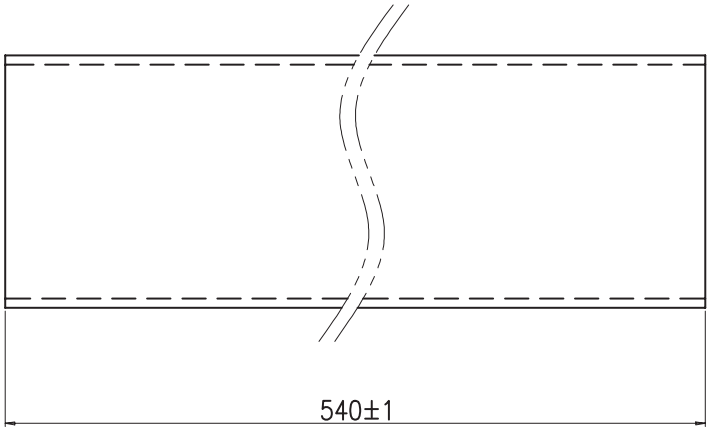

REVISION HISTORY

rev.	description	date
1.0	initial release	05/30/2023
1.01	CUI Devices rebranded to Same Sky	09/12/2024

The revision history provided is for informational purposes only and is believed to be accurate.

Same Sky offers a one (1) year limited warranty. Complete warranty information is listed on our website.

Same Sky reserves the right to make changes to the product at any time without notice. Information provided by Same Sky is believed to be accurate and reliable. However, no responsibility is assumed by Same Sky for its use, nor for any infringements of patents or other rights of third parties which may result from its use.

Same Sky products are not authorized or warranted for use as critical components in equipment that requires an extremely high level of reliability. A critical component is any component of a life support device or system whose failure to perform can be reasonably expected to cause the failure of the life support device or system, or to affect its safety or effectiveness.