QUELIGHTING

Sustainable Lighting Solution



QLSP08RGBWWCWH

(5050 2.2W Multi-Color LED)

Product Outline:

This is a multi-color LED that provides high lumen output in the 5050 package. Creating a small optical light source because of the compact design it's ideal for color mixing applications

Features:

- **Five-Colors** LED, Red/Green/Blue/Warm and Cold White LED
- High brightness output @ **150mA**,
- Package Dimension = 5.2mmX5.0mmX0.95mm
- RoHS compliant
- Custom Bin available upon special request
- View angel >120°
- MSL 2a

Application:

- Stage lighting,
- Architecture Lighting
- Garden Lighting
- Indoor and Outdoor display
- Entertainment lighting.

Compliance and Certification:

Mechanical Property:

(Dimension)

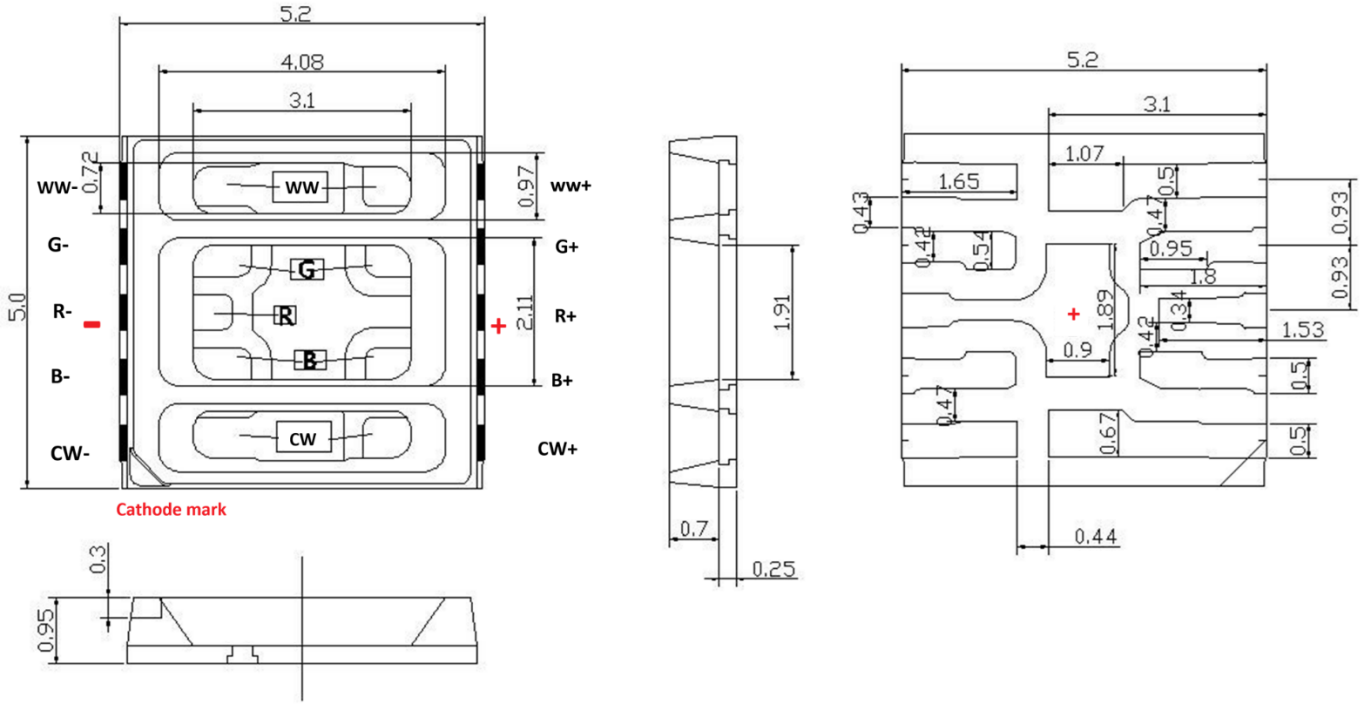

* All dimensions are in millimeters,
* Tolerances are ± 0.10mm.
* Please do not bend the leads of the LED, otherwise it will damage the LED.
* Please do not use a force of over 0.3kgf impact or pressure on the lens of the LED, otherwise it will cause a catastrophic failure.

Recommended Solder footprint:

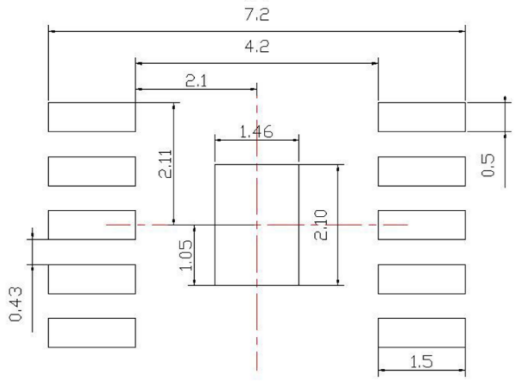

* All dimensions are in millimeters.
* The LEDs is designed to be reflow soldered on to a PCB. IF dip soldered that QL cannot guarantee its reliability.
* Reflow soldering must not be performed more than twice.

Characteristics

■ Absolute Maximum Ratings

(Ta=25℃)

Parameter	Symbol	Rating	Unit
DC Forward Current - R,G,B	If	150	mA
DC Forward Current – White	If	150	mA
Leakage Current (5V)	Ir	10	μA
Total Power Dissipation	Pd	360	mW
Pulse Forward Current - R,G,B	Ifp	180	mA
Pulse Forward Current - White	Ifp	200	mA
LED Junction Temperature	TJ	105	℃
Storage Temperature	Tstg	-40 ~ 80	℃
Operation Temperature	Topr	-40 ~ 80	℃
Soldering Temperature	Tsol	260 < 10 sec	℃

(1) Proper current rating must be observed to maintain junction temperature below maximum at all time
(2) IFP Condition: Duty 1/10, Pulse within 10msec

■ Electrical / Optical Characteristic

(Ta=25 oC)

Parameter	Symbol	Condition	Min.	Typ.	Max.	Unit
Red	Vf	150mA	2.0		2.6	V
Green	Vf		2.8		3.4	V
Blue	Vf		2.8		3.4	V
Warm White	Vf		2.8		3.4	V
Cold White	Vf		2.8		3.4	V
View Angle	θ			120		deg

(1) Tolerance of measurement: VF=+/- 0.1V

■ Specification

Product	Color	Current	Vf(V) Typ.	Wd / CCT (nm)	Intensity(mcd) or Flux ΦV(lm)	
					Min.	Typ.
QLSP08RGBWWCWH	Red	150mA	2.3	620~630	15	22
	Green		3.2	520~535	40	45
	Blue		3.2	460~470	8	12
	Warm White		3.2	2850~3150K	55	60
	Cold White		3.2	6000~7000K	65	70

*Tolerance = +/- 10%

■ Groups

CIE Binning:

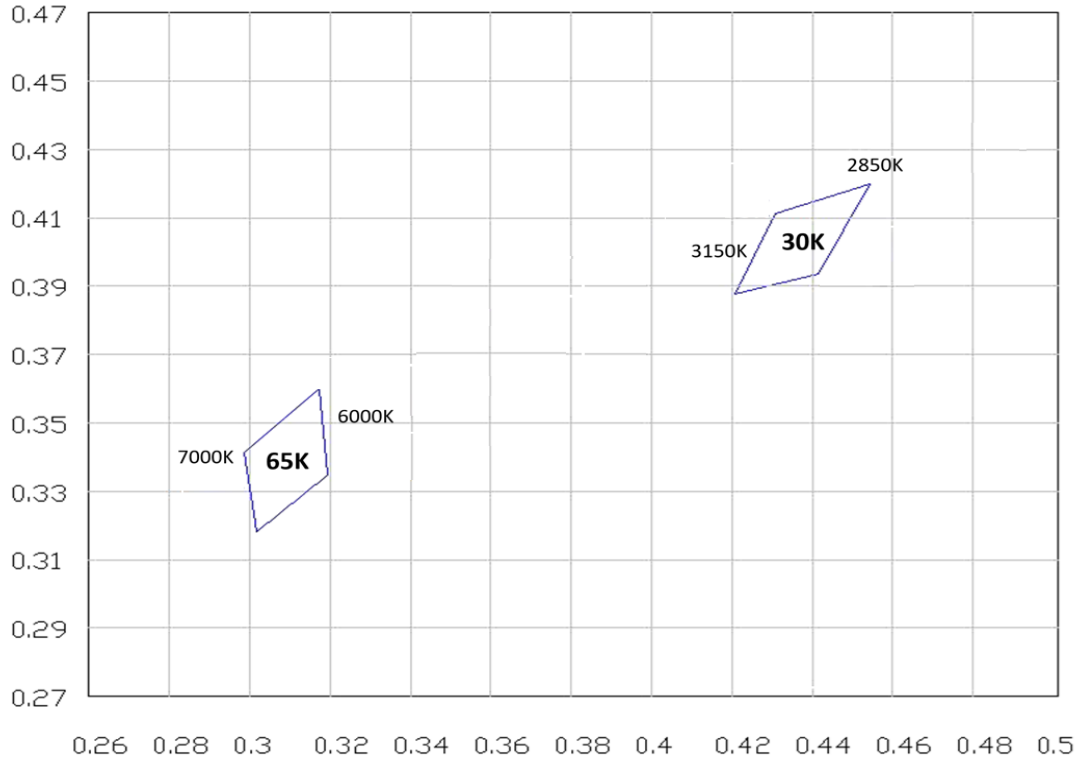

Dominant Wavelength

Wd (nm)				
Color	**Code name**	**Min.**	**Max.**	**Condition**
Red	A89	620	630	150mA
Green	DNPQ	520	535	
Blue	DCD	460	470	

Measurement tolerance is +/- 1nm

Forward Voltage (V_F) Bin:

VF Rank				
Color	**Code name**	**Low**	**High**	**Condition**
Red	R6	2.0	2.6	150mA
Green	Z6	2.8	3.4	
Blue	Z6	2.8	3.4	
Warm White	Z6	2.8	3.4	
Cold White	Z6	2.8	3.4	

The forward voltage tolerance is ± 0.1V

Luminous Intensity Bin:

Rank Flux ΦV(lm)				
Color	**Code name**	**Low**	**High**	**Condition**
Red	R1	15	30	150mA
Green	G1	40	50	
Blue	B1	8	18	
Warm/Cold White	A	55	65	
	B	65	75	

luminous flux tolerance is ± 7%

Characteristic Curves

(1) Color Spectrum

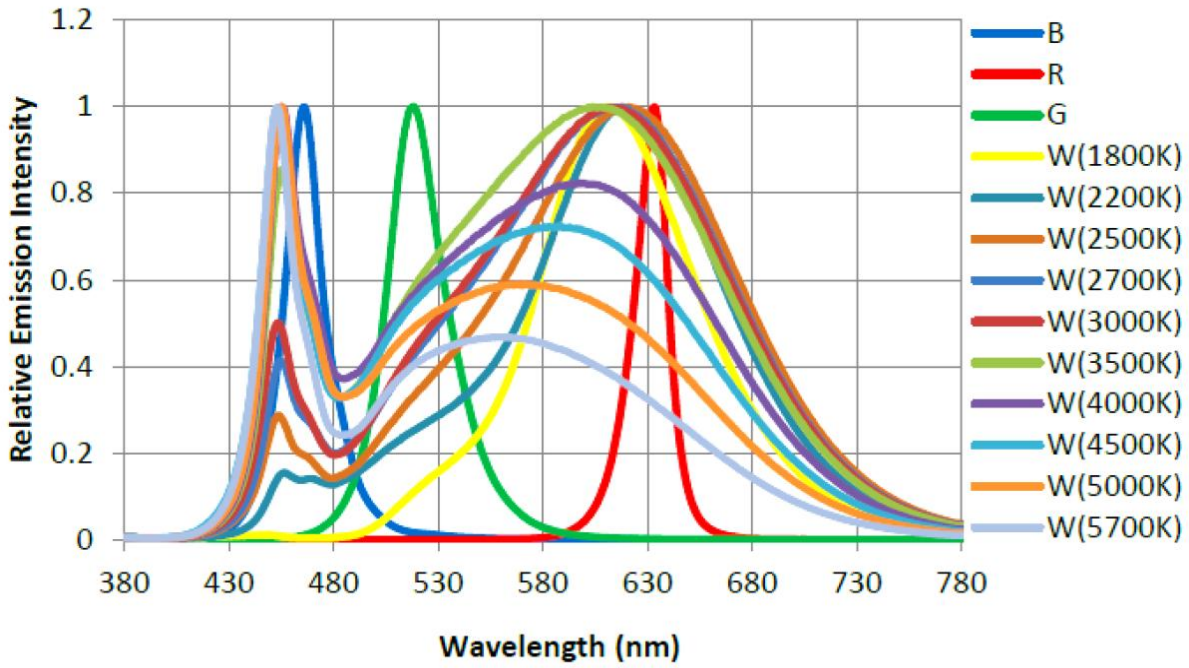

(2). Typical Representative Spatial Radiation Pattern

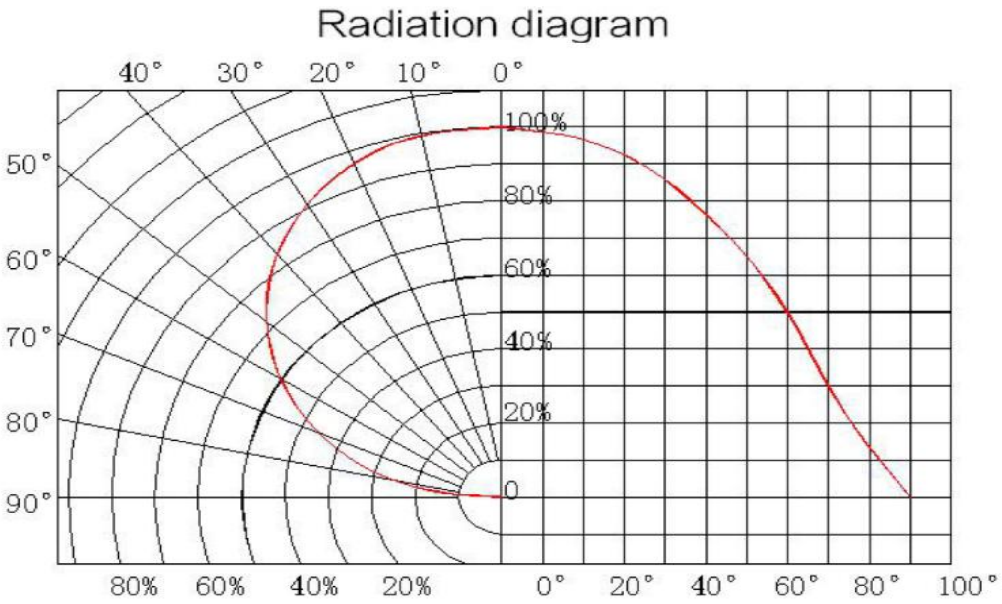

(3). Forward Current vs Relative Luminous Flux

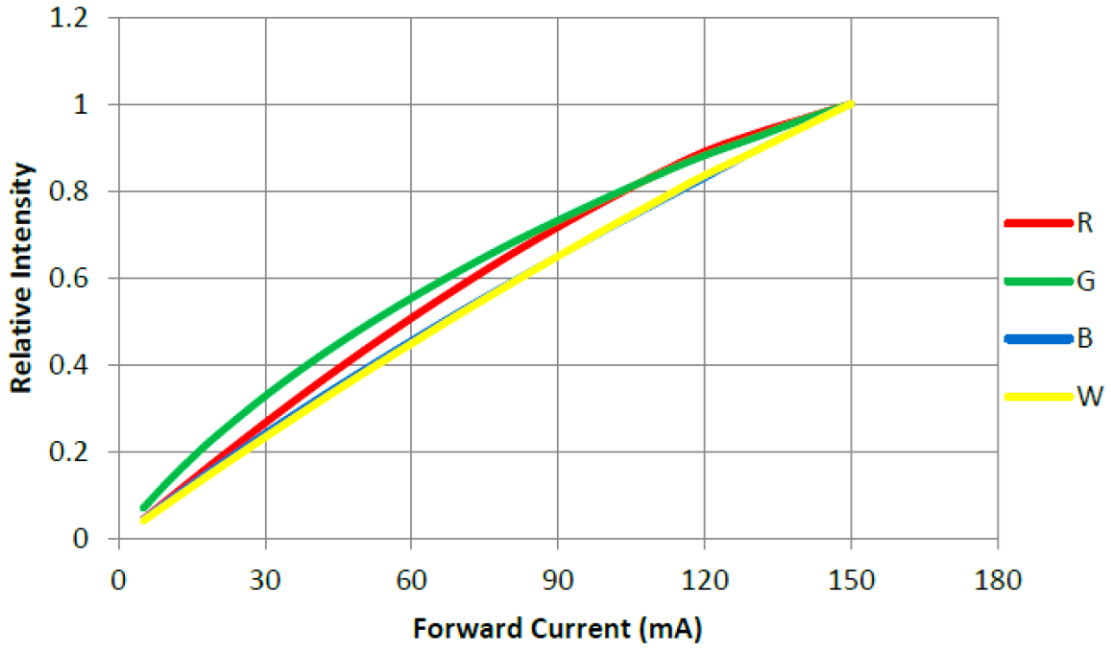

(4). Forward Current vs Forward Voltage

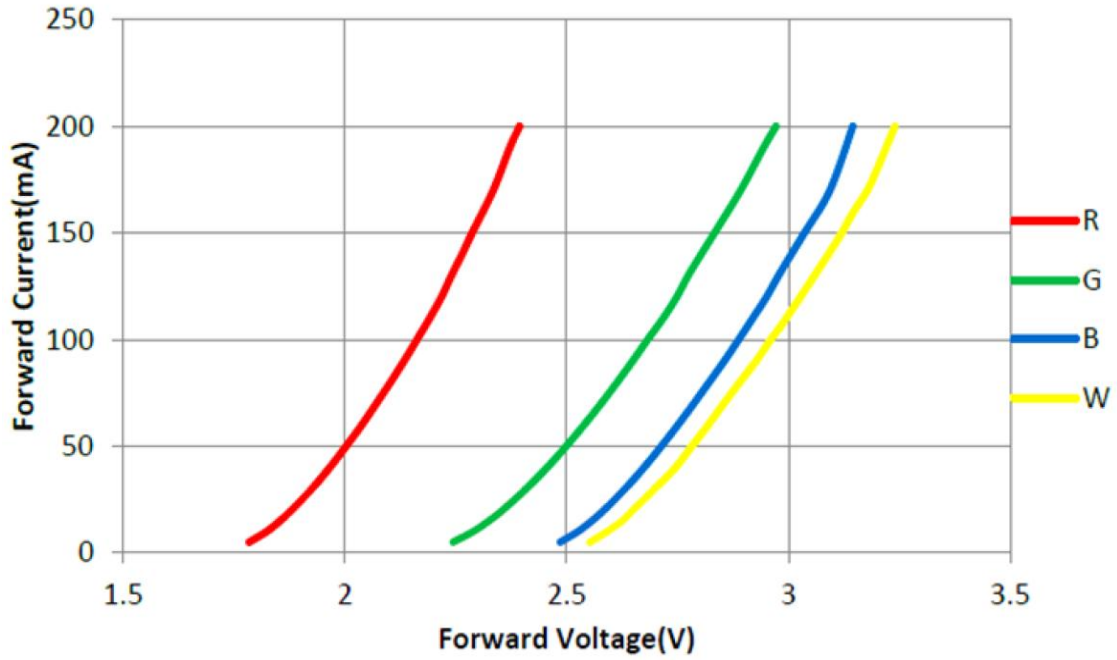

(5). Temperature Vs. Relative Intensity

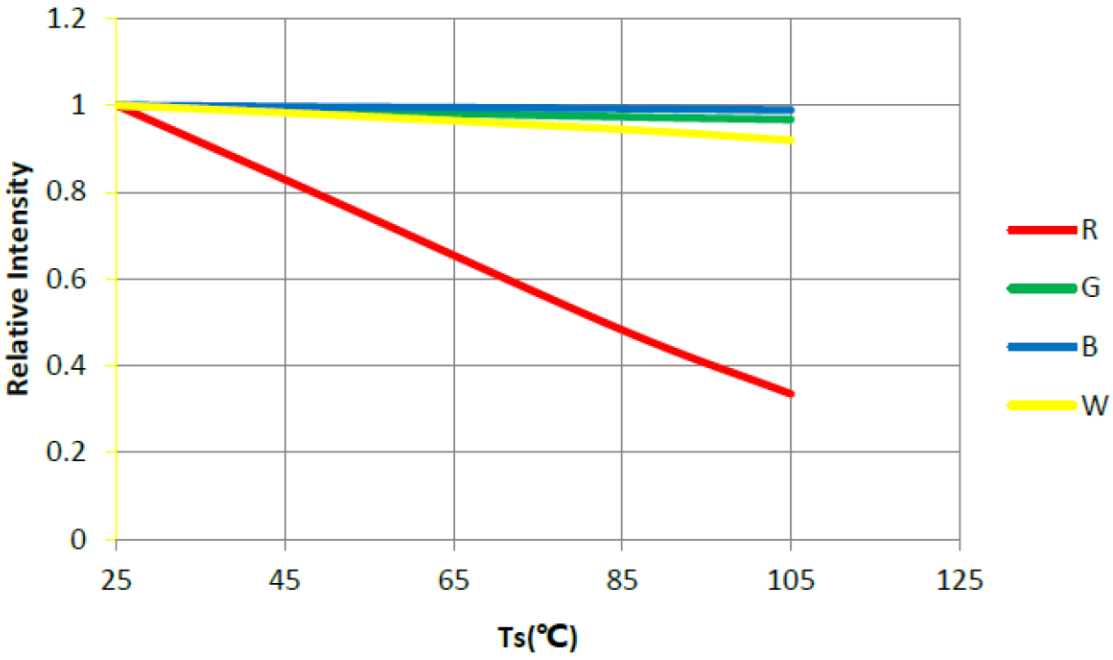

(6). Ts Temperature Vs Forward Current

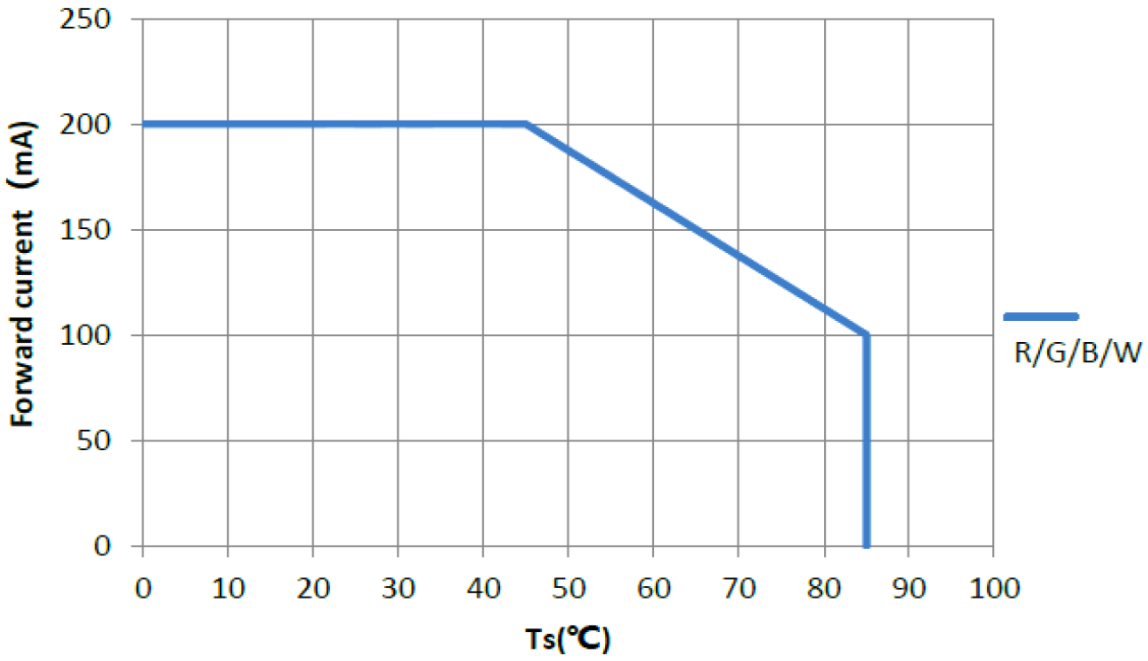

■ Reliability test:

No	Item	Condition	Time/Cycle	Sample size
1	Steady State Operating Life of Room Temperature	25℃ Operating	1000 Hrs	20 pcs
2	Steady State Operating Life of Low Temperature -40℃	-40℃ Operating	1000 Hrs	20 pcs
3	Steady State Operating Life of Low Temperature 60℃	60℃ Operating	1000 Hrs	20 pcs
4	Steady State Operating Life of Low Temperature 85℃	85℃ Operating	1000 Hrs	20 pcs
5	Low temperature storage -40℃	-40℃ Storage	1000 Hrs	20 pcs
6	High temperature storage 100℃	100℃ Storage	1000 Hrs	20 pcs
7	Steady State Operating Life of High Humidity Heat 60℃90%	60ºC/90% Operating	1000 Hrs	20 pcs
8	Steady State Pulse Operating Life Condition	25℃10Hz duty=1/10 Operating	200 Cycle	20 pcs
9	Resistance to soldering heat on PCB (JEDEC MSL3)	pre-store@60℃, 60%RH for 52hrs Tsld max.=260 10sec	3 Times	20 pcs
10	Heat Cycle Test (JEDEC MRC)	25℃~65℃~-10℃, 90%RH, 24hr/1cycle	10 Cycle	20 pcs
11	Thermal shock	-40℃/ 20minr~ 5minr~100℃ /20min	300 Cycle	20 pcs

■ Judgment Criteria:

Item	Symbol	Test Condition	Judgment Criteria
Forward Voltage	Vf	150 mA	△Vf< 10%
Luminous Flux	Iv	150 mA	△Iv< 30%

Solder Profile:

-The recommended reflow soldering profile is as follows (temperatures indicated are as measured on the surface of the LED resin):

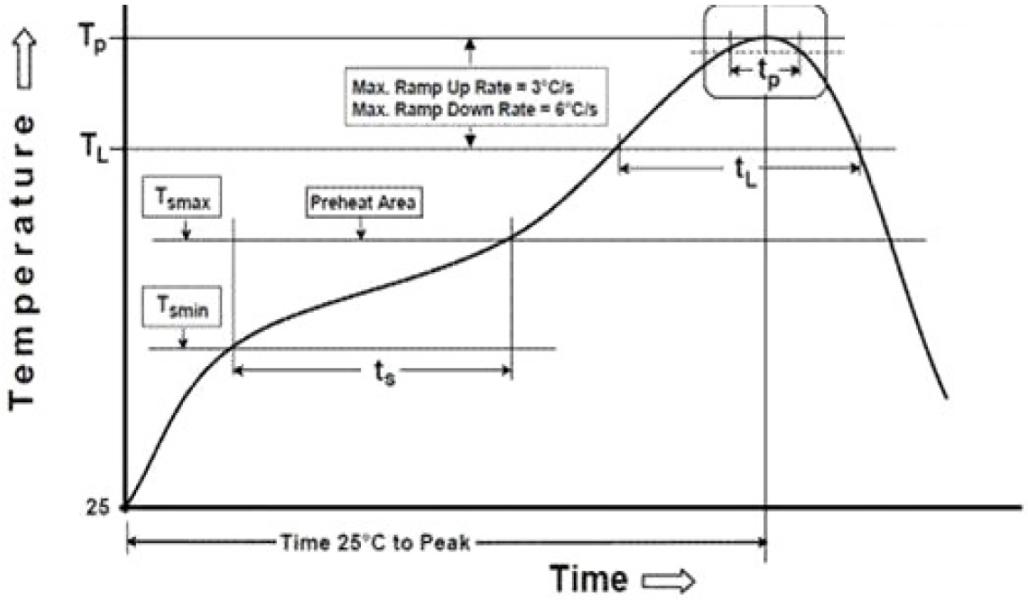

Profile Feature	Sn-Pb Eutectic Assembly	Pb-Free Assembly
Temperature Min(T_{smin})	100℃	150℃
Temperature Max(T_{smax})	150℃	200℃
Time(t_a) from (T_{smin} to T_{smax})	60-120 seconds	60-120 seconds
Ramp-up rate(T_L to T_P)	3℃/second max.	3℃/second max.
Liquidous Temperature(T_L)	183℃	217℃
Time(t_L) maintained above T_L	60-150 seconds	60-150 seconds
Peak package body temperature(T_P)	235℃	260℃
Time within 5℃ of Actual Peak temperature (t_p)	20seconds*	30 seconds*
Ramp-down rate(T_P to T_L)	6℃/second max.	6℃/second max.
Time 25℃ to peak temperature	6 minutes max.	8 minutes max.
* Tolerance for peak profile temperature (T_P) is defined as a supplier minimum and a user maximum.		

Note:

1. The recommended reflow temperature is 230'C(+/-5'C). The maximum soldering temperature should be limited to 240'C
2. Do not stress the silicone resin while it is exposed to high temperatures.
3. The number of reflow process should not exceed 2 times

Taping & Packing:

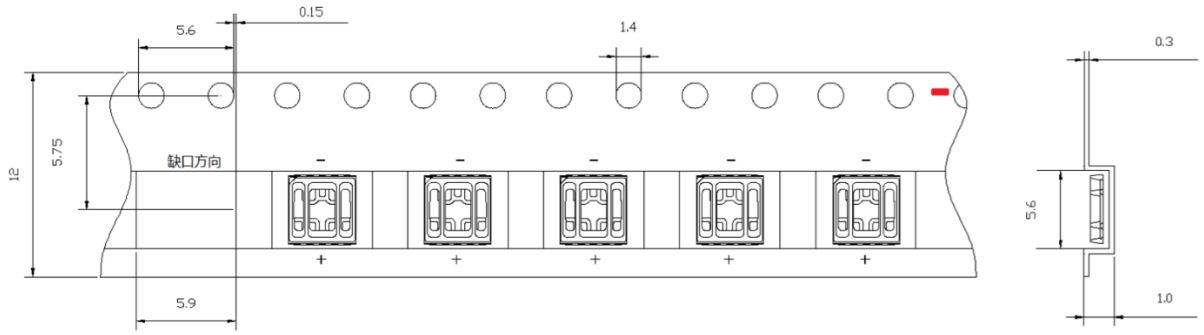

Unit : mm

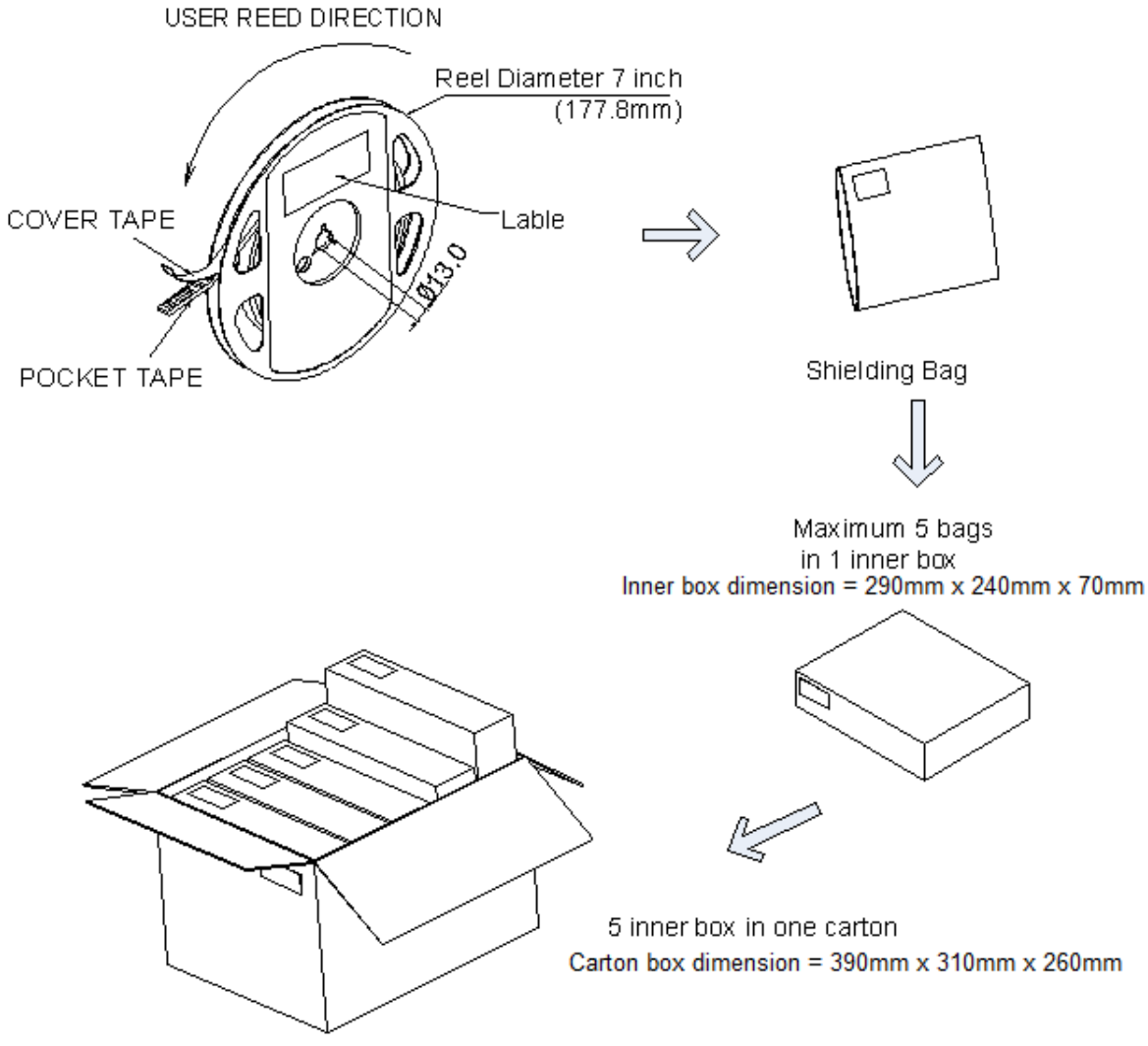

Labeling

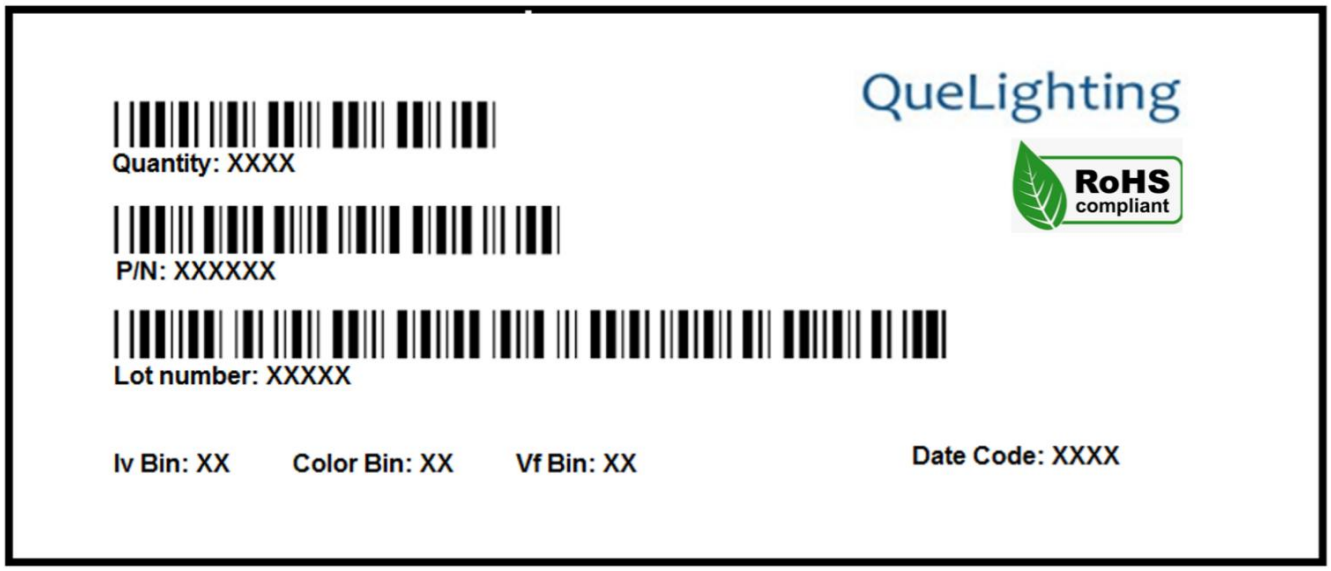

Ordering Information:

Part #	Multiple Quantities	Quantity per Reel
QLSP08RGBWWCWH		1000 pcs

Revision History:

Revision Date:	Changes:	Version #:
01-01-2026	Initial release	1.0