PXP6014/03P/ST Datasheet

Product Name // Screwed Front Panel Mount Connector PXM6014 Series 3 Contact Plug Screw Termination (contacts supplied fitted) Plastic Body

View Product Page



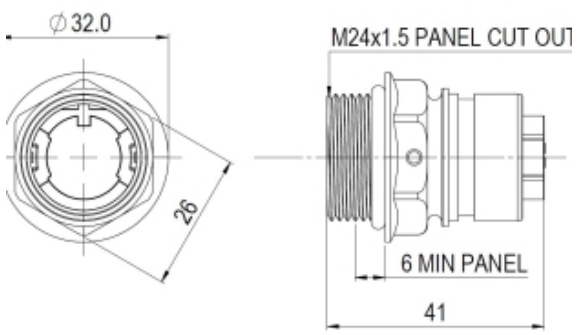

// Product Description:

- Screwed Front Panel Mount Connectors
- Water and dustproof to IP66, IP68, IP69K when mated with compatible connector
- 30 degree push twist locking, tamperproof lock prevents accidental un-mating
- Plug
- 3 Contacts
- Screw contacts supplied fitted
- Plastic Body
- PXP6083 Sealing Cap available separately to maintain IP rating of unmated connectors
- Mate with PXP6010 Series Flex Connectors

// General Information:

Product Display Title:	Screwed Front Panel Mount Connectors
Product Family:	Circular Power Connectors
Product Series:	6000 Series Buccaneer
Body Colour:	Grey
Body Material:	Polycarbonate/Polybutylene Terephthalate (PC/PBT)
Body Material Type:	Plastic Body
Contact Type:	Plug Contact
Coupling Type:	Push-Twist
Diameter Over Coupling Ring Mm:	32mm
Flamability Rating:	UL94V-0
Insulation Resistance:	$>10^6$MΩ @500V DC
Ip Rating:	IP66, IP68, IP69K
Max Contact Accomodation Awg:	16AWG
Min Contact Accomodation Awg:	18AWG
Max Contact Accomodation Mm2:	1.5mm2
Min Contact Accomodation Mm2:	0.75mm2
Max Operating Temperature:	+120°C
Min Operating Temperature:	-40°C
Min Panel Thickness:	6mm
Number Of Contacts:	3 Contacts
Panel Cut Out:	M24x1.5
Rohs Compliant:	Yes
Salt Spray Corrosion Test:	EN60068-2-52 Test Kb Salt Mist (Cyclic) Marine Severity Level 1
Thread Size:	M24x1.5
Voltage Max:	277V

// Product PDF Links

6000 Series power connectors...

6000 Series metal body power...

// Product 3D CAD Model Links

PXP6014/03P/ST3D CAD Model