CUI Devices is now Same Sky! Learn More



# SERIES: PRL3 | DESCRIPTION: LATCHING POWER RELAY

## FEATURES

- single coil
- double coil
- 1 form A & 1 form C



## MODEL

| MODEL | coil voltage typ (Vdc) | coil resistance (Ω±10%) | operating voltage min (Vdc) | reset voltage min (Vdc) | coil power typ (mW) |
|---|---|---|---|---|---|
| PRL3-3V-SC-XX | 3 | 22.5 | 2.4 | 2.4 | 400 |
| PRL3-5V-SC-XX | 5 | 62.5 | 4 | 4 | 400 |
| PRL3-9V-SC-XX | 9 | 202.5 | 7.2 | 7.2 | 400 |
| PRL3-12V-SC-XX | 12 | 360 | 9.6 | 9.6 | 400 |
| PRL3-24V-SC-XX | 24 | 1440 | 19.2 | 19.2 | 400 |
| PRL3-3V-DC-XX | 3 | 11.5/11.5 | 2.4 | 2.4 | 800 |
| PRL3-5V-DC-XX | 5 | 31.5/31.5 | 4 | 4 | 800 |
| PRL3-9V-DC-XX | 9 | 101.5/101.5 | 7.2 | 7.2 | 800 |
| PRL3-12V-DC-XX | 12 | 180/180 | 9.6 | 9.6 | 800 |
| PRL3-24V-DC-XX | 24 | 720/720 | 19.2 | 19.2 | 800 |

Notes:
1. The magnetic relay is shipped in the reset state. However, it may be in the set state due to impact of transportation or installation. Therefore, check status of the relay prior to use.
2. It is recommended to apply 1~1.3 times of rated coil voltage and the pulse width must be greater than 100 ms.
3. Do not apply voltage to the set coil and reset coil at the same time, and do not apply voltage to the coil for more than 1 minute.
4. During tranportation, storage, and application, please keep the relays away from strong magnetic fields to avoid malfunction or damage.
5. All specifications are measured at 23°C unless otherwise specified.

## PART NUMBER KEY

**PRL3 - XX - XX - XX**

| Base Number | Coil Voltage (Vdc): | Coil Type: | Contact Form: |
|---|---|---|---|
| | 3V = 3 | SC = Single Coil | 1A = 1 Form A |
| | 5V = 5 | DC = Dual Coil | 1C = 1 Form C |
| | 9V = 9 | | |
| | 12V = 12 | | |
| | 24V = 24 | | |

## CONTACT SPECIFICATIONS

| parameter | conditions/description | min | typ | max | units |
|---|---|---|---|---|---|
| contact form | 1 Form A & 1 Form C | | | | |
| contact material | Ag alloy | | | | |
| contact rating | 10 A @ 277 Vac<br>TV-8 250 Vac | | | | |
| contact resistance | at 6 Vdc, 1 A | | | 100 | mΩ |
| max switching voltage | | | | 277<br>30 | Vac<br>Vdc |
| max switching current | 1 Form A<br>1 Form C | | | 15<br>10 | A<br>A |
| max switching power | | | | 2,770<br>300 | VA<br>W |
| life | electrical: 10 A, 277 Vac resistive load<br>mechanical | | 50,000<br>10,000,000 | | operations<br>operations |

## GENERAL SPECIFICATIONS

| parameter | conditions/description | min | typ | max | units |
|---|---|---|---|---|---|
| insulation resistance | at 500 Vdc | 100 | | | MΩ |
| dielectric strength | between open contacts, 50/60 Hz for 1 minute<br>between coil and contacts, 50/60 Hz for 1 minute | | 750<br>2,700 | | Vac<br>Vac |
| operate time | | | | 8 | ms |
| release time | | | | 5 | ms |
| shock resistance | endurance<br>misoperation | | 980<br>98 | | $m/s^2$<br>$m/s^2$ |
| vibration resistance | endurance: 10~55 Hz, 1.5 mm double amplitude<br>misoperation: 10~55 Hz, 1.5 mm double amplitude | | | | |
| operating temperature | | -40 | | 85 | °C |
| humidity | at 40°C | 5 | | 85 | %RH |
| weight | | | 9 | | g |
| safety approvals | UL/cUL 508 | | | | |
| flammability rating | UL94V-0 | | | | |
| RoHS | yes | | | | |
| packaging | tube: 25 pcs per tube<br>carton size: 456 x 266 x 161 mm<br>carton QTY: 1,000 pcs per carton | | | | |

## SOLDERABILITY

| parameter | conditions/description | min | typ | max | units |
|---|---|---|---|---|---|
| hand soldering | for 3.5±0.5 seconds | 340 | 350 | 360 | °C |
| wave soldering | for 10±1 seconds | 255 | 260 | 265 | °C |

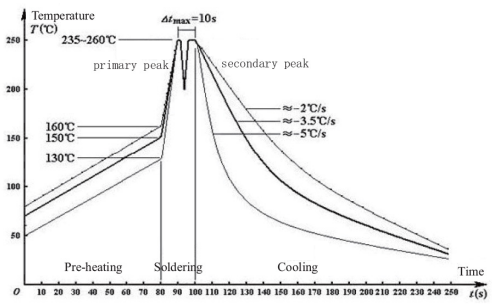


Double-wave Soldering Curve

## MECHANICAL DRAWING (1 FORM A, SINGLE COIL)

units: mm

| DESCRIPTION | MATERIAL | PLATING/COLOR |
|---|---|---|
| housing | PBT (UL94V-0) | white |
| contact terminals | copper alloy | tin |
| coil terminals | iron | tin over copper |

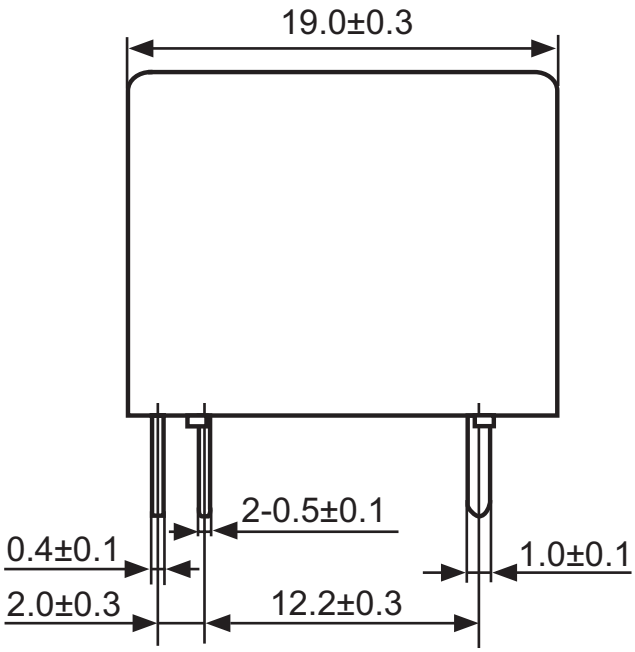


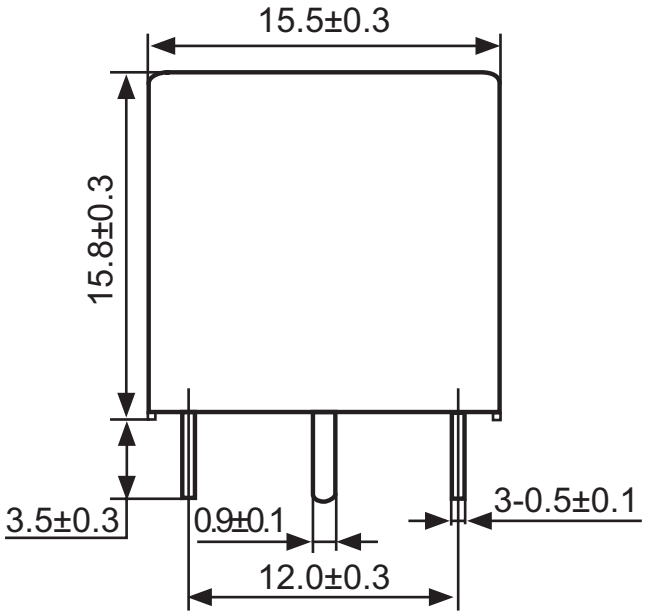


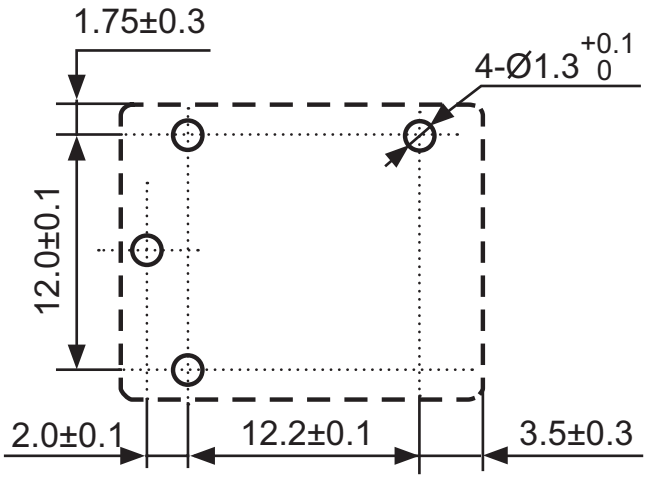


Recommended PCB Layout
Bottom View

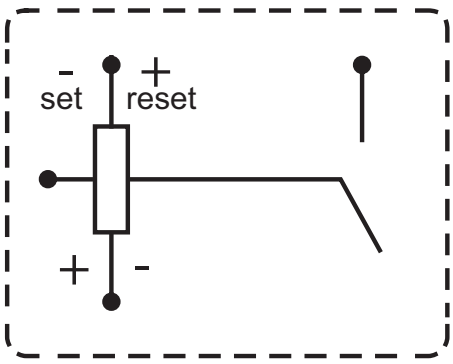


Wiring Diagram
Bottom View

## MECHANICAL DRAWING (1 FORM A, DOUBLE COIL)

units: mm

| DESCRIPTION | MATERIAL | PLATING/COLOR |
|---|---|---|
| housing | PBT (UL94V-0) | white |
| contact terminals | copper alloy | tin |
| coil terminals | iron | tin over copper |

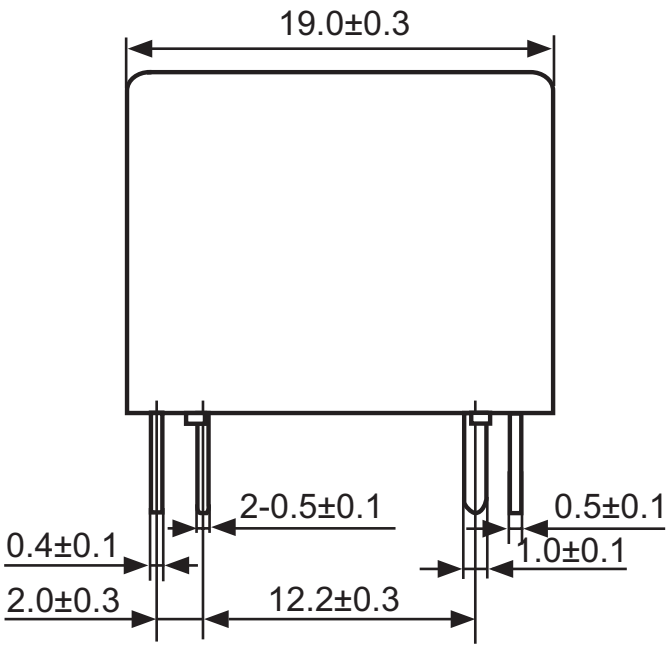


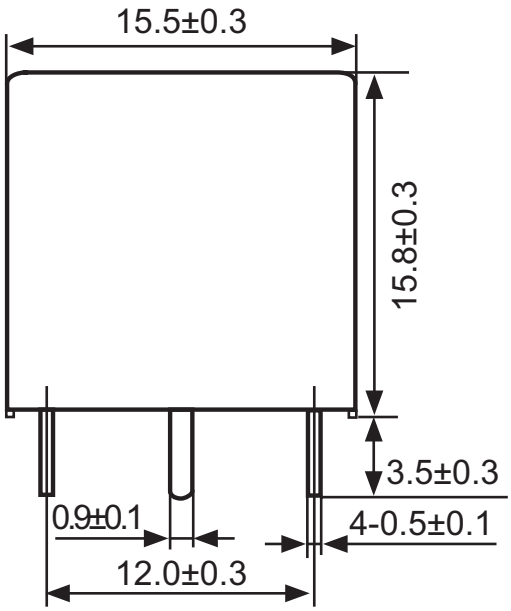


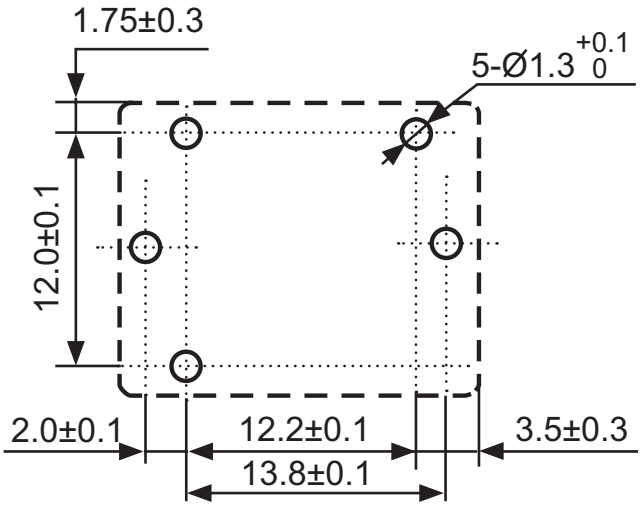


Recommended PCB Layout
Bottom View

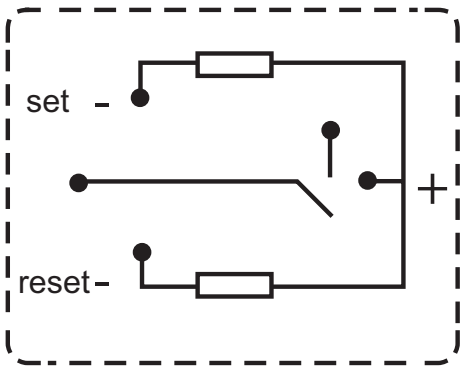


Wiring Diagram
Bottom View

## MECHANICAL DRAWING (1 FORM C, SINGLE COIL)

units: mm

| DESCRIPTION | MATERIAL | PLATING/COLOR |
|---|---|---|
| housing | PBT (UL94V-0) | white |
| contact terminals | copper alloy | tin |
| coil terminals | iron | tin over copper |

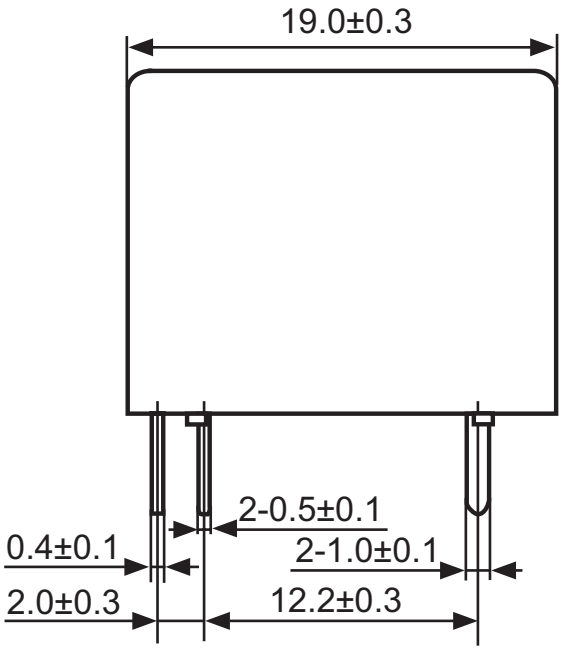


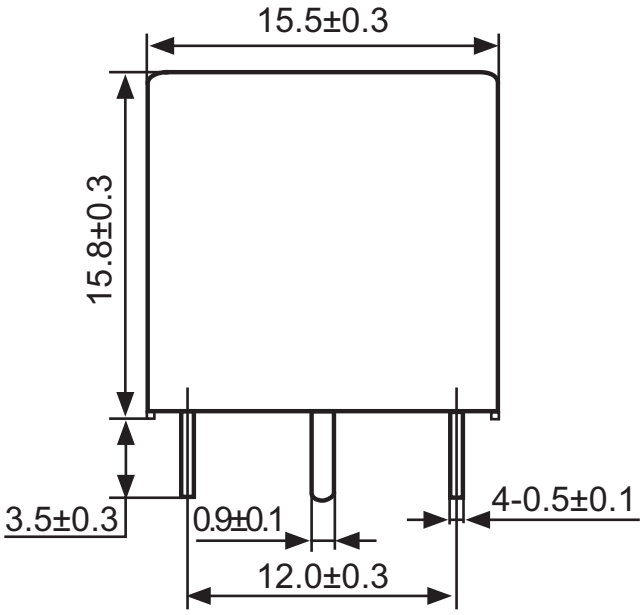


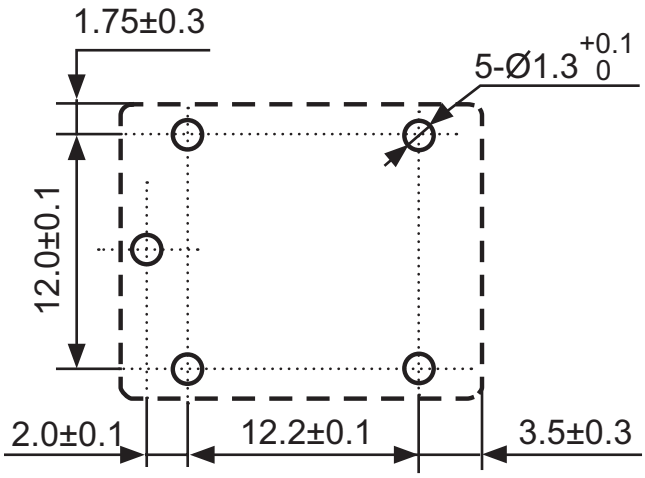


Recommended PCB Layout
Bottom View

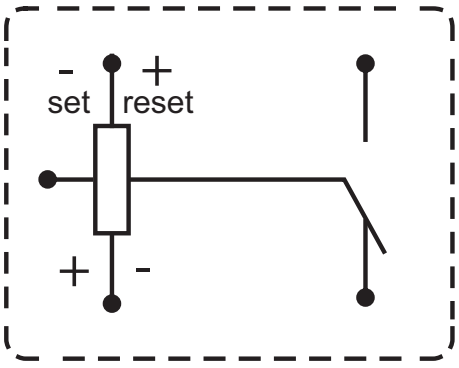


Wiring Diagram
Bottom View

## MECHANICAL DRAWING (1 FORM C, DOUBLE COIL)

units: mm

| DESCRIPTION | MATERIAL | PLATING/COLOR |
|---|---|---|
| housing | PBT (UL94V-0) | white |
| contact terminals | copper alloy | tin |
| coil terminals | iron | tin over copper |

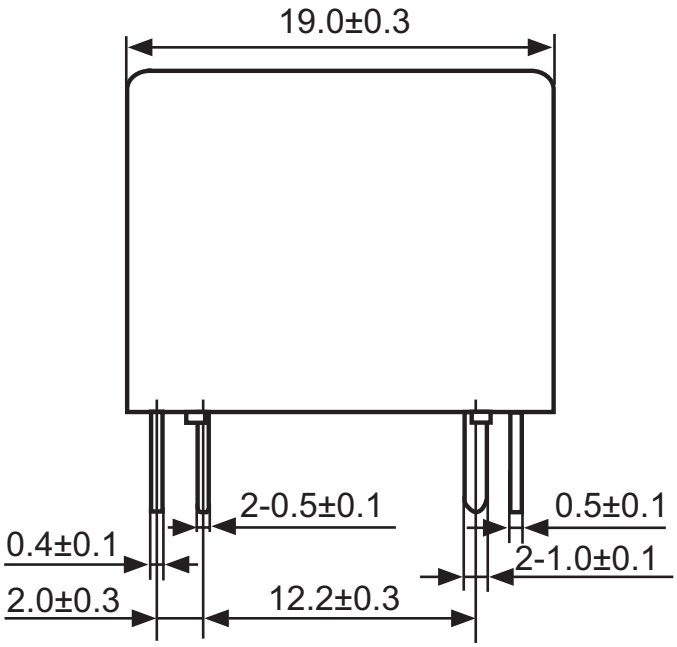


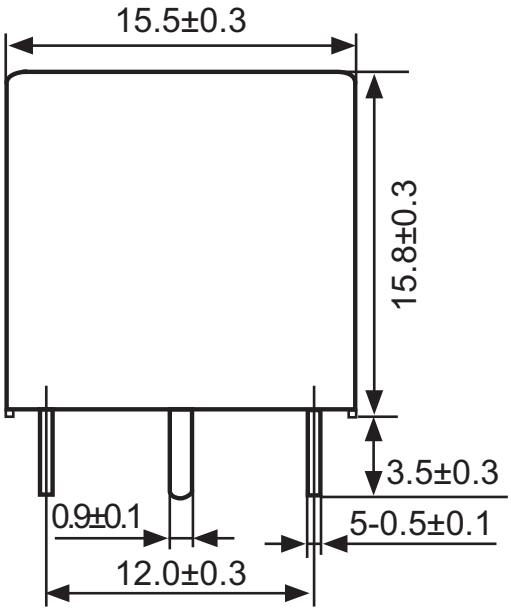


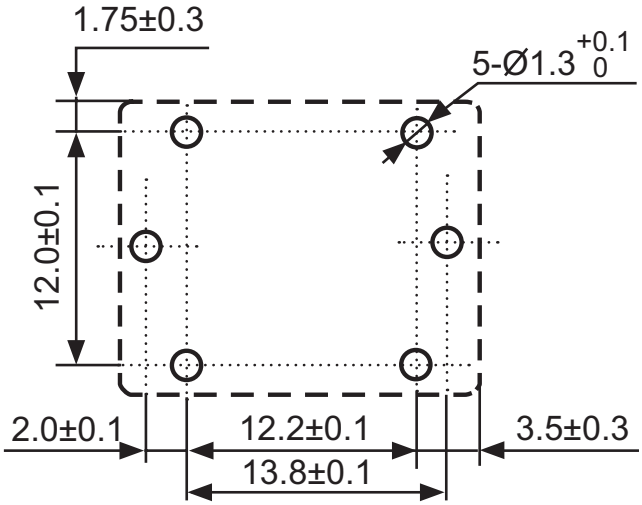


Recommended PCB Layout
Bottom View

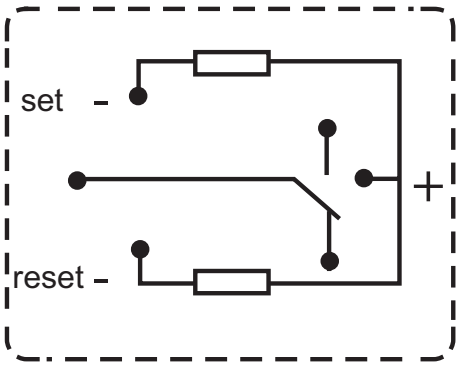


Wiring Diagram
Bottom View

## REVISION HISTORY

| rev. | description | date |
|---|---|---|
| 1.0 | initial release | 05/20/2025 |

The revision history provided is for informational purposes only and is believed to be accurate.

same sky

Same Sky offers a one (1) year limited warranty. Complete warranty information is listed on our website.

Same Sky reserves the right to make changes to the product at any time without notice. Information provided by Same Sky is believed to be accurate and reliable. However, no responsibility is assumed by Same Sky for its use, nor for any infringements of patents or other rights of third parties which may result from its use.

Same Sky products are not authorized or warranted for use as critical components in equipment that requires an extremely high level of reliability. A critical component is any component of a life support device or system whose failure to perform can be reasonably expected to cause the failure of the life support device or system, or to affect its safety or effectiveness.

**sameskydevices.com**