CUI Devices is now Same Sky! Learn More

SERIES: PRL1 | DESCRIPTION: LATCHING POWER RELAY

FEATURES

- single coil
- double coil
- 2 form A

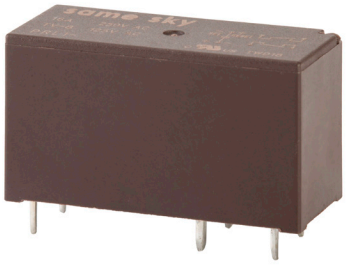

MODEL

MODEL	coil voltage typ (Vdc)	coil resistance (Ω±10%)	operating voltage min (Vdc)	reset voltage min (Vdc)	coil power typ (mW)
PRL1-3V-SC-2A	3	11.3	2.4	2.4	800
PRL1-5V-SC-2A	5	31.3	4	4	800
PRL1-9V-SC-2A	9	101.3	7.2	7.2	800
PRL1-12V-SC-2A	12	180	9.6	9.6	800
PRL1-24V-SC-2A	24	720	19.2	19.2	800
PRL1-3V-DC-2A	3	7.5/7.5	2.4	2.4	1,200
PRL1-5V-DC-2A	5	20.8/20.8	4	4	1,200
PRL1-9V-DC-2A	9	67.5/67.5	7.2	7.2	1,200
PRL1-12V-DC-2A	12	120/120	9.6	9.6	1,200
PRL1-24V-DC-2A	24	480/480	19.2	19.2	1,200

Notes:
1. The magnetic relay is shipped in the reset state. However, it may be in the set state due to impact of transportation or installation. Therefore, check status of the relay prior to use.
2. It is recommended to apply 1~1.3 times of rated coil voltage and the pulse width must be greater than 30 ms.
3. Do not apply voltage to the set coil and reset coil at the same time, and do not apply voltage to the coil for more than 1 minute.
4. During tranportation, storage, and application, please keep the relays away from strong magnetic fields to avoid malfunction or damage.
5. All specifications are measured at 23°C unless otherwise specified.

PART NUMBER KEY

PRL1 - XX - XX - 2A

- PRL1 — Base Number
- XX — Coil Voltage (Vdc):
  - 3V = 3
  - 5V = 5
  - 9V = 9
  - 12V = 12
  - 24V = 24
- XX — Coil Type:
  - SC = Single Coil
  - DC = Dual Coil

CONTACT SPECIFICATIONS

parameter	conditions/description	min	typ	max	units
contact form	2 Form A				
contact material	Ag alloy				
contact rating	16 A @ 250 Vac TV-8 125 Vac				
contact resistance	at 6 Vdc, 1 A			50	mΩ
max switching voltage				277	Vac
max switching current				20	A
max continuous current	at 23°C, 1 hour			20	A
min switching load	24 Vdc, 1 A				
life	electrical: 16 A, 250 Vac resistive load mechanical: at 300 operations/minute		50,000 1,000,000		operations operations

GENERAL SPECIFICATIONS

parameter	conditions/description	min	typ	max	units
insulation resistance	at 500 Vdc	1,000			MΩ
dielectric strength	between open contacts, 50/60 Hz for 1 minute between coil and contacts, 50/60 Hz for 1 minute		1,000 4,000		Vac Vac
operate time				15	ms
release time				15	ms
shock resistance	endurance misoperation		1,000 100		m/s^2 m/s^2
vibration resistance	endurance: 10~55 Hz, 1.5 mm double amplitude misoperation: 10~55 Hz, 1.5 mm double amplitude				
operating temperature		-40		85	°C
humidity	at 40°C	5		85	%RH
weight			12		g
safety approvals	UL/cUL 508				
flammability rating	UL94V-0				
RoHS	yes				
packaging	tube: 25 pcs per tube carton size: 388 x 360 x 154 mm carton QTY: 1,000 pcs per carton				

SOLDERABILITY

parameter	conditions/description	min	typ	max	units
hand soldering	for 3.5±0.5 seconds	340	350	360	°C
wave soldering	for 10±1 seconds	255	260	265	°C

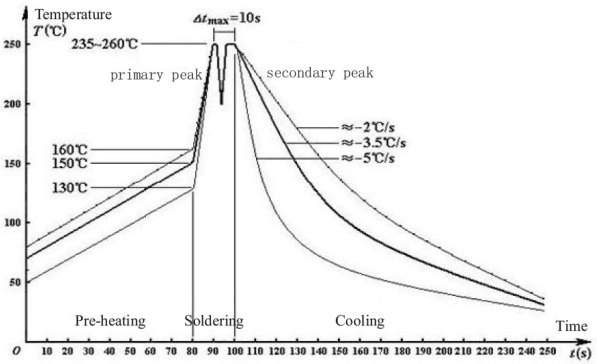

Double-wave Soldering Curve

MECHANICAL DRAWING (SINGLE COIL)

units: mm

DESCRIPTION	MATERIAL	PLATING/COLOR
housing	PBT (UL94V-0)	black
contact terminals	copper alloy	tin
coil terminals	iron	tin over copper

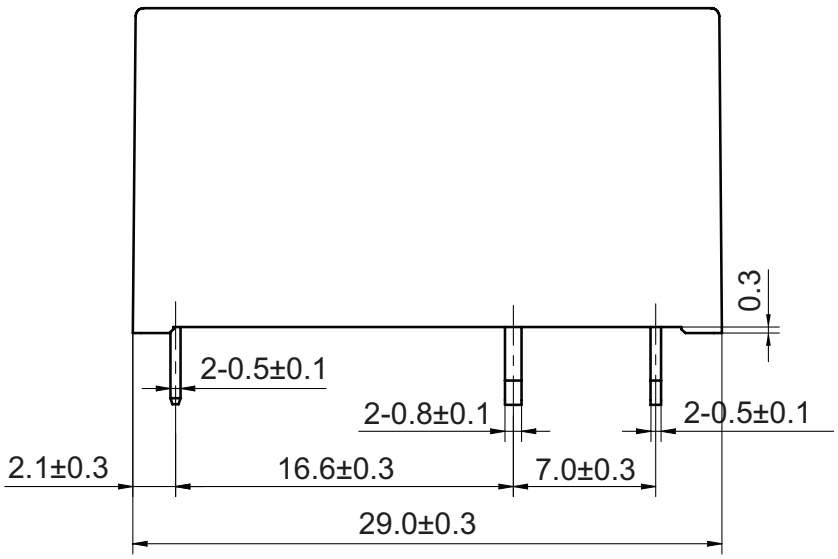

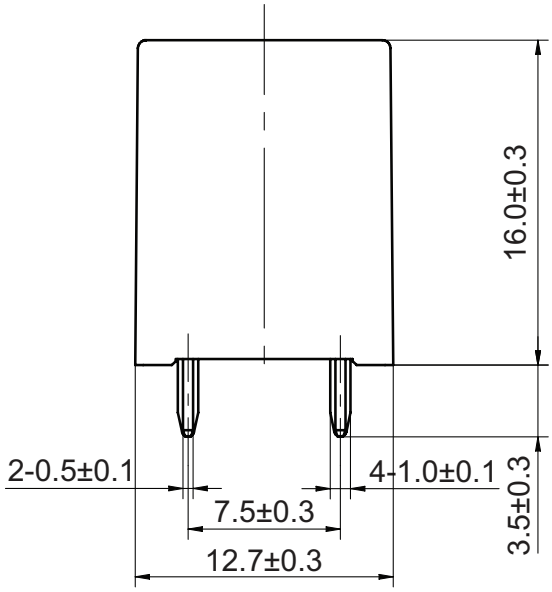

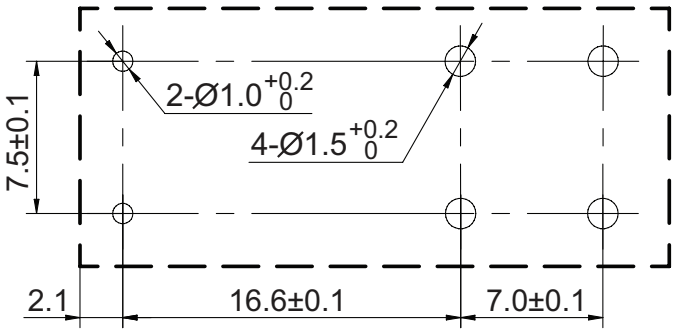

Recommended PCB Layout
Bottom View

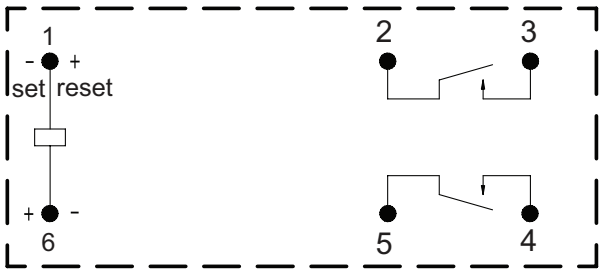

Wiring Diagram
Bottom View

MECHANICAL DRAWING (DOUBLE COIL)

units: mm

DESCRIPTION	MATERIAL	PLATING/COLOR
housing	PBT (UL94V-0)	black
contact terminals	copper alloy	tin
coil terminals	iron	tin over copper

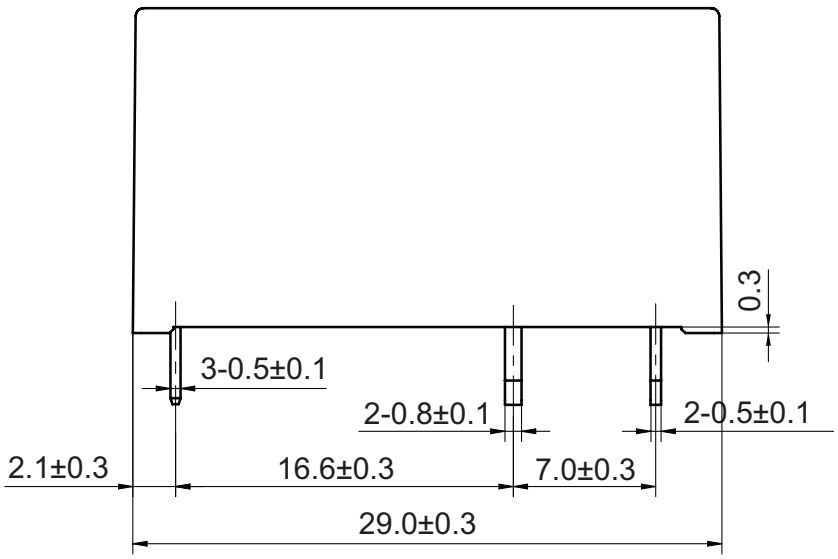

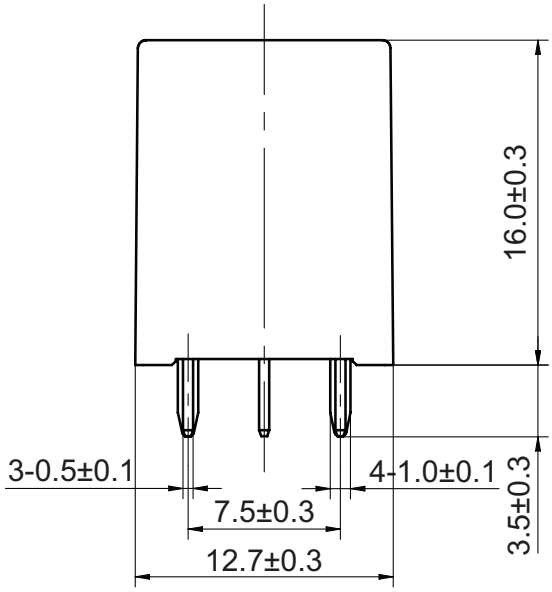

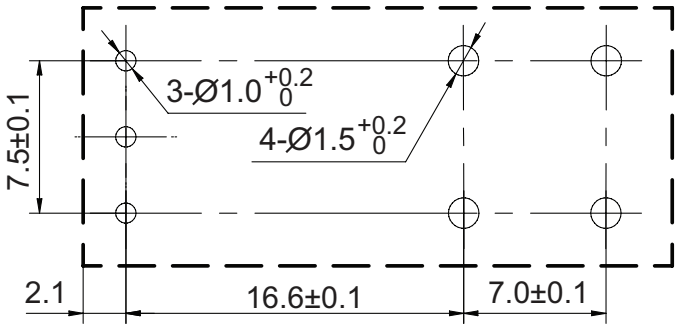

Recommended PCB Layout
Bottom View

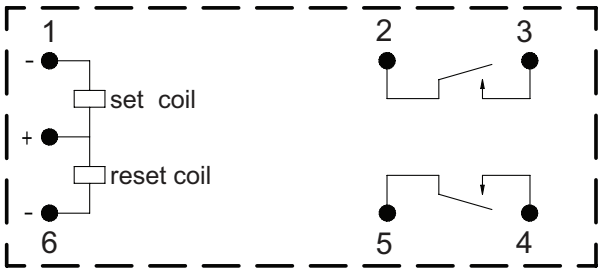

Wiring Diagram
Bottom View

REVISION HISTORY

rev.	description	date
1.0	initial release	05/19/2025

The revision history provided is for informational purposes only and is believed to be accurate.

same sky

Same Sky offers a one (1) year limited warranty. Complete warranty information is listed on our website.

Same Sky reserves the right to make changes to the product at any time without notice. Information provided by Same Sky is believed to be accurate and reliable. However, no responsibility is assumed by Same Sky for its use, nor for any infringements of patents or other rights of third parties which may result from its use.

Same Sky products are not authorized or warranted for use as critical components in equipment that requires an extremely high level of reliability. A critical component is any component of a life support device or system whose failure to perform can be reasonably expected to cause the failure of the life support device or system, or to affect its safety or effectiveness.

sameskydevices.com