CUI Devices is now Same Sky! Learn More

Additional Resources: Product Page

REV.	DESCRIPTION	DATE
A	NEW DRAWING	11/11/2009
B	CORRECTED THREAD SIZE	9/11/2015
C	BRAND UPDATE	1/6/2022
D	CUI DEVICES REBRANDED TO SAME SKY	09/12/2024
E	FACTORY LOCATION CHANGE	05/12/2026

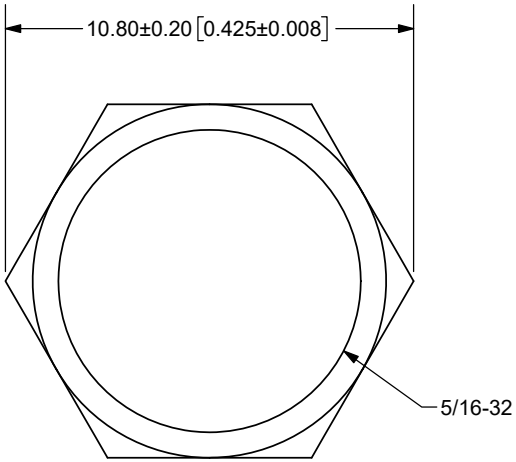

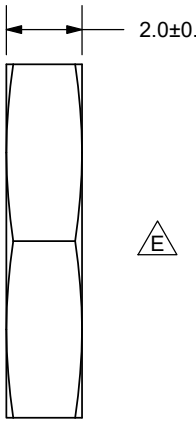

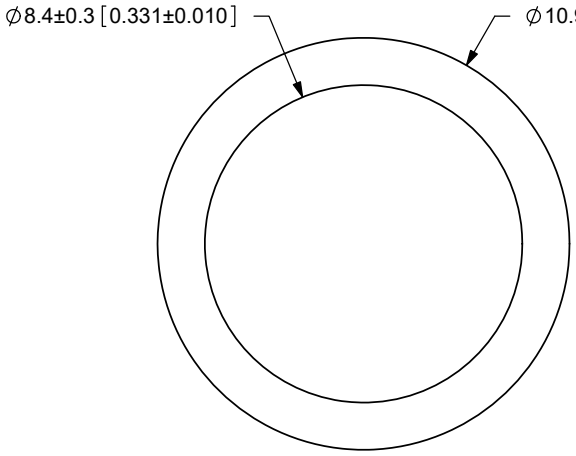

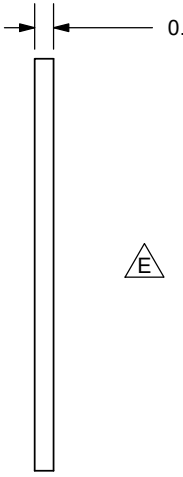

TOLERANCE:
±0.1mm UNLESS OTHERWISE SPECIFIED

RoHS

same sky

6405 SW Rosewood St, Suite C
Lake Oswego, OR 97035
Phone: 877-323-3576

Website: www.sameskydevices.com

	MATERIAL	PLATING	COLOR
NUT	Copper Alloy	Nickel	Silver
WASHER	Q195	Nickel	Silver

TITLE: PJ-005X HARDWARE			REV: E
PART NO. PJ-005X-HDW			UNITS: MM [INCHES]
DRAWN BY: RDS	APPROVED BY:		SCALE: 5:1

PC FILE NAME: PJ-005X-HDW

COPYRIGHT 2024 BY SAME SKY