CUI Devices is now Same Sky! Learn More

MODEL: PD-30S | DESCRIPTION: POWER DIN JACK

FEATURES

- 3 pin power DIN
- through hole
- shielded
- suitable for high power applications



RoHS

SPECIFICATIONS

parameter	conditions/description	min	typ	max	units
rated input voltage			20		Vdc
rated input current	pins 1, 2 pin 3			7.5 1	A A
contact resistance	at 20 mA, 1 kHz			30	mΩ
insulation resistance	at 250 Vdc	50			MΩ
voltage withstand	for 1 minute			250	Vac
insertion force				6.5	kg
withdrawal force		0.5		6.5	kg
operating temperature		-40		85	°C
life			1,000		cycles
flammability rating	UL94V-0				
RoHS	yes				

SOLDERABILITY

parameter	conditions/description	min	typ	max	units
wave soldering	for max 10 seconds	235		260	°C

MECHANICAL DRAWING

units: mm
tolerance: ±0.3 mm
unless otherwise noted

ITEM	DESCRIPTION	MATERIAL	PLATING/COLOR
1	body	PBT (UL94V-0)	black
2	cover	PBT (UL94V-0)	black
3	earth terminal	brass	tin
4	terminals 1, 2	brass	tin
5	terminal 3	phosphor bronze	tin
6	shield	SPCC	tin

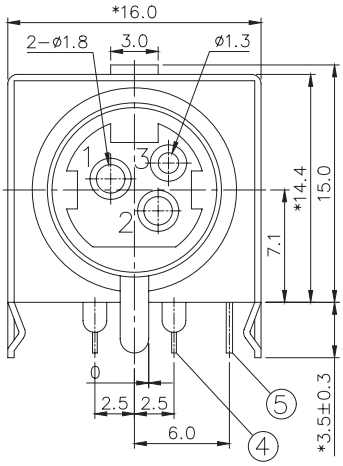

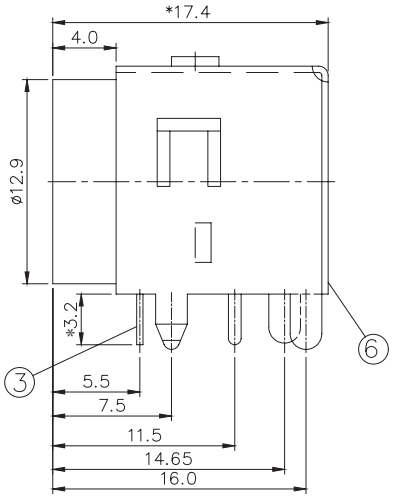

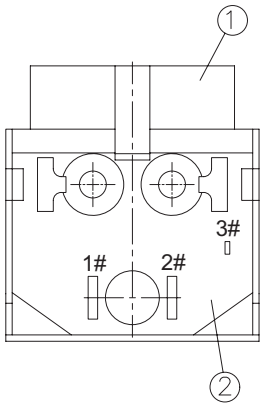

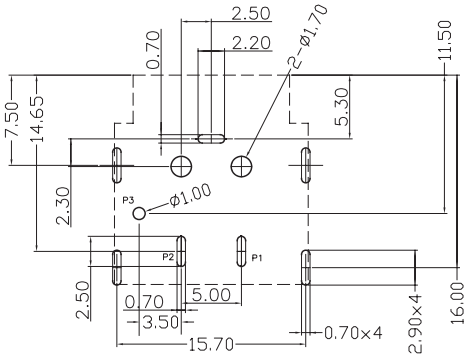

Recommended PCB Layout
Top View
(Date Codes prior to 03/03/2022)

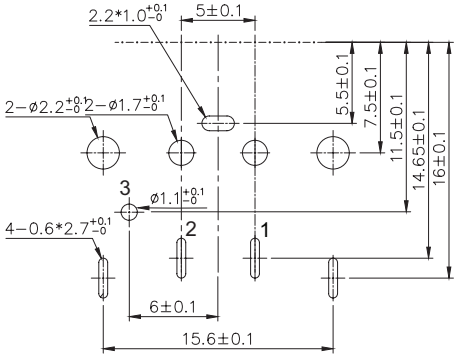

Recommended PCB Layout
Top View
(Date Code after 03/03/2022)

REVISION HISTORY

rev.	description	date
1.0	initial release	11/19/2008
1.01	update to tolerance	09/08/2009
1.02	updated housing, brand update	11/15/2019
1.03	updated PCB footprint	09/01/2020
1.04	modified design, changed factory	02/18/2022
1.05	logo, datasheet style update	08/05/2022
1.06	CUI Devices rebranded to Same Sky	09/12/2024

The revision history provided is for informational purposes only and is believed to be accurate.

same sky

Same Sky offers a one (1) year limited warranty. Complete warranty information is listed on our website.

Same Sky reserves the right to make changes to the product at any time without notice. Information provided by Same Sky is believed to be accurate and reliable. However, no responsibility is assumed by Same Sky for its use, nor for any infringements of patents or other rights of third parties which may result from its use.

Same Sky products are not authorized or warranted for use as critical components in equipment that requires an extremely high level of reliability. A critical component is any component of a life support device or system whose failure to perform can be reasonably expected to cause the failure of the life support device or system, or to affect its safety or effectiveness.

sameskydevices.com