Nov.1.2026 Copyright 2026 HIROSE ELECTRIC CO., LTD. All Rights Reserved.
In case of consideration for using Automotive equipment / device which demand high reliability, kindly contact our sales window correspondents.

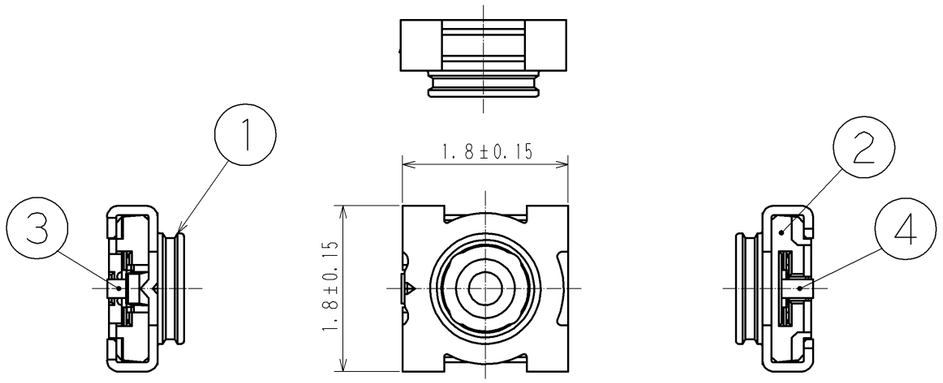

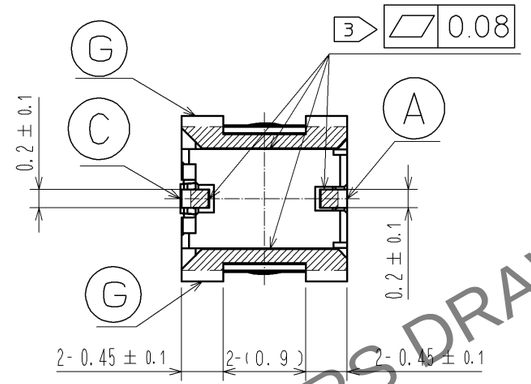

RECOMMENDED REFLOW TEMPERATURE PROFILE

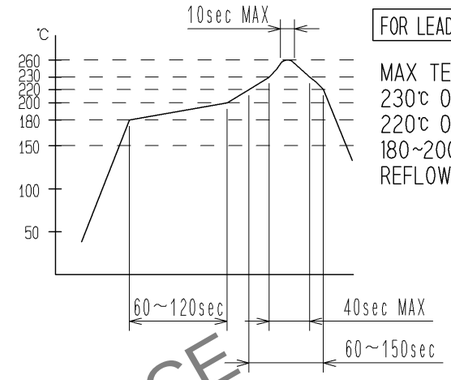

FOR LEAD-FREE SOLDER

MAX TEMPERATURE : 260℃ 10sec MAX
230℃ OR MORE : 40sec MAX
220℃ OR MORE : 60~150sec
180~200℃ : 60~120sec
REFLOW : 2 TIMES MAX

NOTE 1. Circuit shall be as follows.

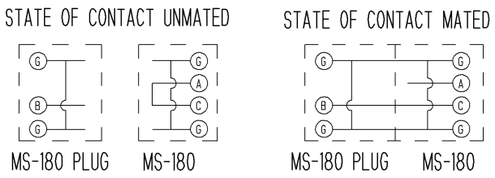

2. For use of this product, be sure to put contact area of plug on position P perpendicularly.
3 Lead co-planarity is to be 0.08mm MAX.
4. Do not use the washing process.
5 Please do not change the specified layout of the PCB dimension and the layout of the stencil plate dimension and thickness otherwise could not be responsible for the solderability of the product.
6. This product is intended to be used for circuit inspection only. Consult us if any other application is considered.
7. Do not use hand soldering for mounting of MS-180.

5 SPECIFIED PCB LAYOUT

The dimensional tolerance to be ± 0.05.

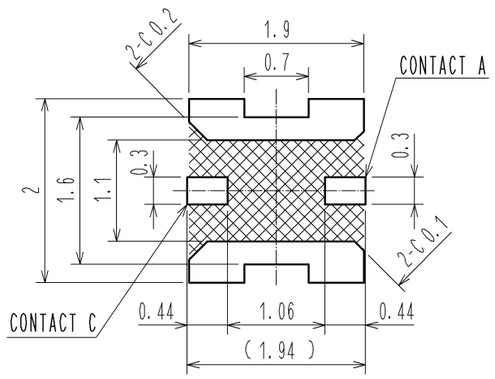

:This area must be free of conductive traces and resist field.

5 SPECIFIED STENCIL PLATE

THICKNESS:0.1mm
The dimensional tolerance to be ± 0.05.

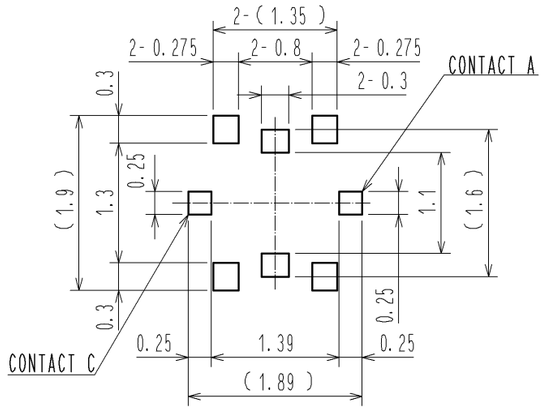

HRS DRAWING FOR REFERENCE

NO.	MATERIAL	FINISH , REMARKS	NO.	MATERIAL	FINISH , REMARKS
3	CU-NI-SI-ALLOY	SELECTIVE GOLD PLATING	7	PS	
2	LCP-M 4		6	PS	
1	BRASS	SELECTIVE GOLD PLATING 4	5	PS	
			4	CU-NI-SI-ALLOY	SELECTIVE GOLD PLATING

UNITS	SCALE		COUNT	DESCRIPTION OF REVISIONS	DESIGNED	CHECKED	DATE
mm	15 : 1	4	2	DIS-J-001356	TS. NAKAGAWA	NK. NINOMIYA	11.09.13

HIROSE ELECTRIC CO., LTD.

APPROVED	KJ. KAWAMURA	08.11.08	DRAWING NO. EDC3-180771-00
CHECED	TY. OZAKI	08.11.07	PART NO. MS-180
DESIGNED	TS. NAKAGAWA	08.11.07	
DRAWN	TS. NAKAGAWA	08.11.07	CODE NO. CL358-0265-7-00 4 1/2

Nov.1.2026 Copyright 2026 HIROSE ELECTRIC CO., LTD. All Rights Reserved.
In case of consideration for using Automotive equipment / device which demand high reliability, kindly contact our sales window correspondents.

PACKAGING SPECIFICATION (2:1)

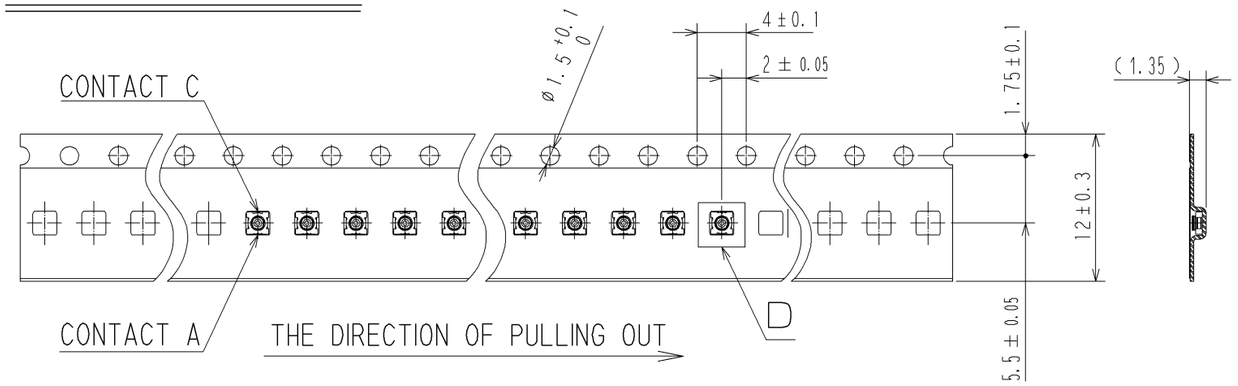

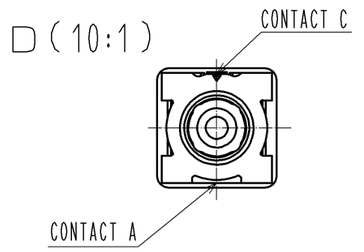

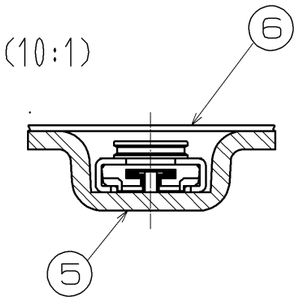

REEL DIMENSIONS(FREE)

15000 PIECES PER REEL

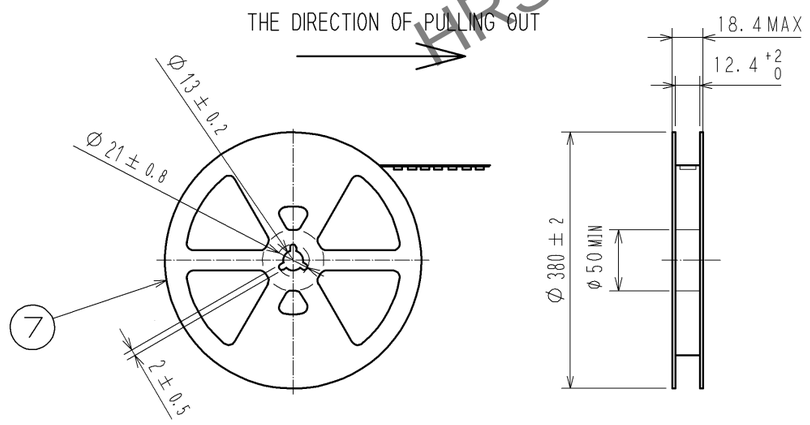

OUTER PACKAGING CASE(FREE)

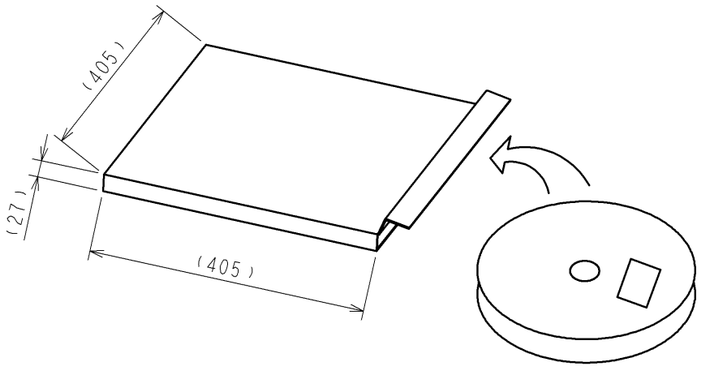

HRS DRAWING FOR REFERENCE

HRS	DRAWING NO.	EDC3-180771-00
	PART NO.	MS-180
	CODE NO.	CL358-0265-7-00