ESD Protection Diode

SC−74 Quad Monolithic Common Anode

MMQA, SZMMQA Quad Common Anode Series

This quad monolithic silicon voltage suppressor is designed for applications requiring transient overvoltage protection capability. It is intended for use in voltage and ESD sensitive equipment such as computers, printers, business machines, communication systems, medical equipment, and other applications. Its quad junction common anode design protects four separate lines using only one package. These devices are ideal for situations where board space is at a premium.

Features

- SC-74 Package Allows Four Separate Unidirectional Configurations
- Peak Power-Min. 24 W @ 1.0 ms (Unidirectional), per Figure 5 Waveform
- Peak Power-Min. 150 W @ 20 μs (Unidirectional), per Figure 6 Waveform
- Maximum Clamping Voltage @ Peak Pulse Current
- Low Leakage < 2.0 μA
- ESD Rating of Class 3B (exceeding 16 kV) per the Human Body Model
- SZ Prefix for Automotive and Other Applications Requiring Unique Site and Control Change Requirements; AEC-Q101 Qualified and PPAP Capable
- These Devices are Pb-Free and are RoHS Compliant*

SC−74 QUAD SURGE PROTECTION 24 WATTS PEAK POWER 5.6 – 33 VOLTS



SC−74
CASE 318F
STYLE 1

PIN ASSIGNMENT

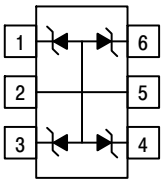

PIN 1. CATHODE
2. ANODE
3. CATHODE
4. CATHODE
5. ANODE
6. CATHODE

MARKING DIAGRAM

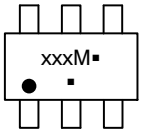

xxx = Specific Device Code
M = Date Cade
▪ = Pb−Free Package

(Note: Microdot may be in either location)

DEVICE MARKING & ORDERING INFORMATION

See specific marking and ordering information in the device marking and ordering information table on page 6 of this data sheet.

*For additional information on our Pb-Free strategy and soldering details, please download the **onsemi** Soldering and Mounting Techniques Reference Manual, SOLDERRM/D

© Semiconductor Components Industries, LLC, 2015

THERMAL CHARACTERISTICS (T_A = 25°C Unless Otherwise Noted)

Characteristic	Symbol	Value	Unit
Peak Power Dissipation @ 1.0 ms (Note 1) @ $T_A \le$ 25°C	P_{pk}	24	W
Peak Power Dissipation @ 20 μs (Note 2) @ $T_A \le$ 25°C	P_{pk}	150	W
Total Power Dissipation on FR-5 Board (Note 3) @ T_A = 25°C	P_D	225 1.8	MW mW/°C
Thermal Resistance from Junction−to−Ambient	$R_{\theta JA}$	556	°C/W
Total Power Dissipation on Alumina Substrate (Note 4) @ T_A = 25°C Derate above 25°C	P_D	300 2.4	MW mW/°C
Thermal Resistance from Junction−to−Ambient	$R_{\theta JA}$	417	°C/W
Junction and Storage Temperature Range	T_J, T_{stg}	−55 to +150	°C
Lead Solder Temperature − Maximum (10 Second Duration)	T_L	260	°C

1. Non-repetitive current pulse per Figure 5 and derate above T_A = 25 °C per Figure 4.
2. Non-repetitive current pulse per Figure 6 and derate above T_A = 25 °C per Figure 4.
3. FR-5 = 1.0 x 0.75 x 0.62 in.
4. Alumina = 0.4 x 0.3 x 0.024 in., 99.5% alumina

ELECTRICAL CHARACTERISTICS (T_A = 25 °C Unless Otherwise Noted)
UNIDIRECTIONAL
(Circuit tied to pins 1, 2, and 5; Pins 2, 3, and 5; Pins 2, 4, and 5; or Pins 2, 5, and 6) (V_F = 0.9 V Max @ I_F = 10 mA)

Device (Note 5)	Breakdown Voltage				Max Reverse Leakage Current		Max Zener Impedance (Note 7)	Max Reverse Surge Current	Max Reverse Voltage @ I_{RSM} (Note 8) (Clamping Voltage)	Maximum Temperature Coefficient of V_Z	Capacitance @ 0 Volt Bias, 1 MHz (pF)	
		V_{ZT} (Note 6) (V)		@ I_{ZT}	I_R	V_R						
	Min	Nom	Max	(mA)	(nA)	(V)	Z_{ZT} @ I_{ZT} (Ω) (mA)	I_{RSM} (A)	V_{RSM} (V)	(mV/°C)	Min	Max
MMQA5V6T1G	5.32	5.6	5.88	1.0	2000	3.0	400	3.0	8.0	1.26	–	–
MMQA6V2T1G/T3G	5.89	6.2	6.51	1.0	700	4.0	300	2.66	9.0	10.6	–	–
MMQA6V8T1G	6.46	6.8	7.14	1.0	500	4.3	300	2.45	9.8	10.9	100	250
MMQA12VT1G	11.4	12	12.6	1.0	75	9.1	80	1.39	17.3	14	–	–
MMQA13VT1G	12.4	13	13.7	1.0	75	9.8	80	1.29	18.6	15	–	–
MMQA15VT1G	14.3	15	15.8	1.0	75	11	80	1.1	21.7	16	–	–
MMQA18VT1G	17.1	18	18.9	1.0	75	14	80	0.923	26	19	–	–
MMQA20VT1G/T3G	19	20	21	1.0	75	15	80	0.84	28.6	20.1	–	–
MMQA22VT1G	20.9	22	23.1	1.0	75	17	80	0.758	31.7	22	–	–
MMQA24VT1G	22.8	24	25.2	1.0	75	18	100	0.694	34.6	25	–	–
MMQA27VT1G	25.7	27	28.4	1.0	75	21	125	0.615	39	28	–	–
MMQA33VT1G	31.4	33	34.7	1.0	75	25	200	0.504	48.6	37	–	–

5. Includes SZ-prefix devices where applicable.
6. V_Z measured at pulse test current I_T at an ambient temperature of 25 °C.
7. Z_{ZT} is measured by dividing the AC voltage drop across the device by the AC current supplied. The specified limits are $I_{Z(AC)}$ = 0.1 $I_{Z(DC)}$, with AC frequency = 1 kHz.
8. Surge current waveform per Figure 5 and derate per Figure 4.

Share Feedback
Your Opinion Matters

TYPICAL CHARACTERISTICS

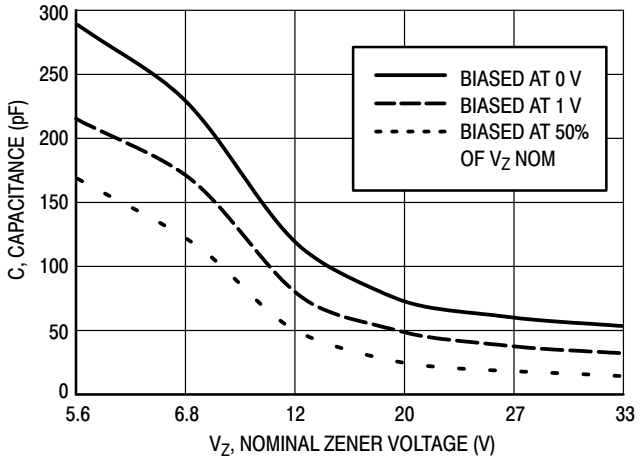

Figure 1. Typical Capacitance

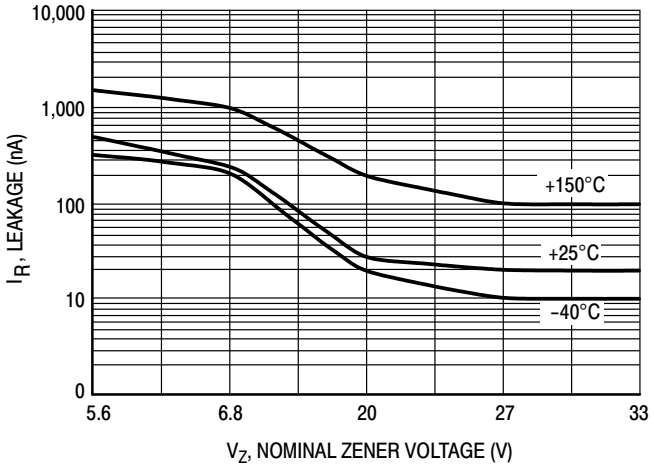

Figure 2. Typical Leakage Current

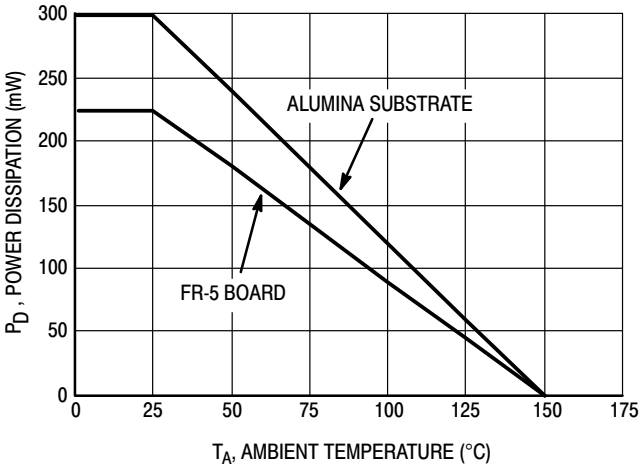

Figure 3. Steady State Power Derating Curve

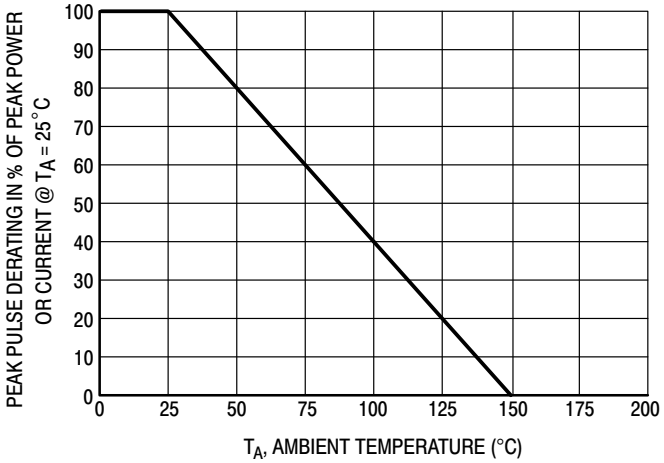

Figure 4. Pulse Derating Curve

Share Feedback
Your Opinion Matters

TYPICAL CHARACTERISTICS

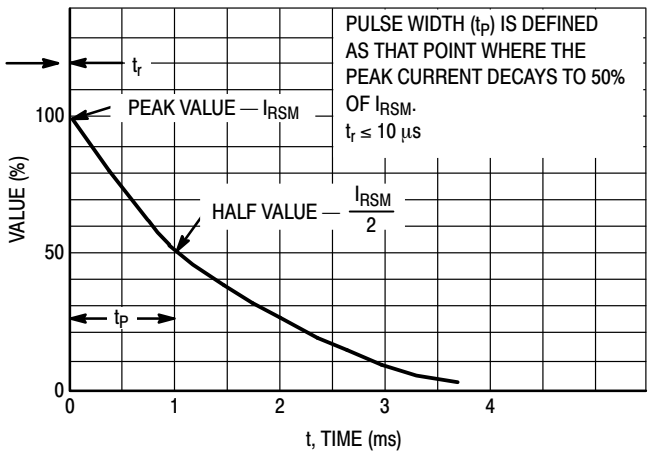

Figure 5. 10 × 1000 μs Pulse Waveform

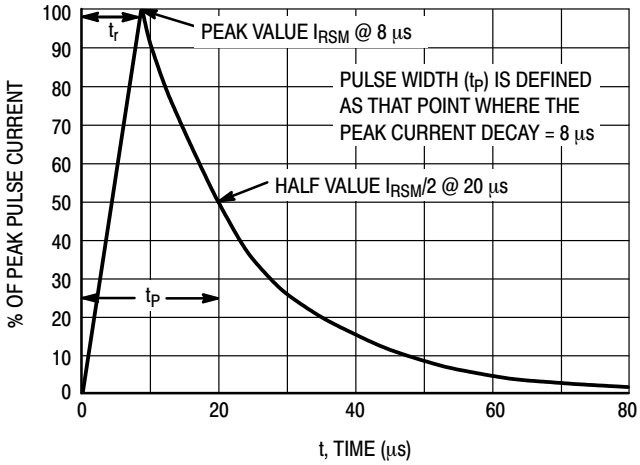

Figure 6. 8 × 20 μs Pulse Waveform

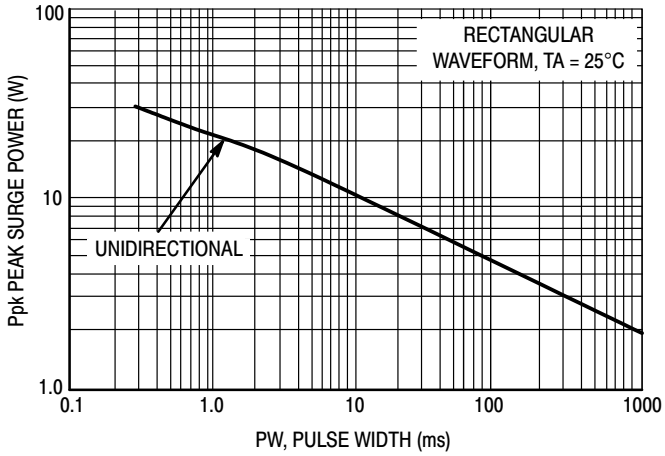

Figure 7. Maximum Non−Repetitive Surge Power, P_{pk} versus PW

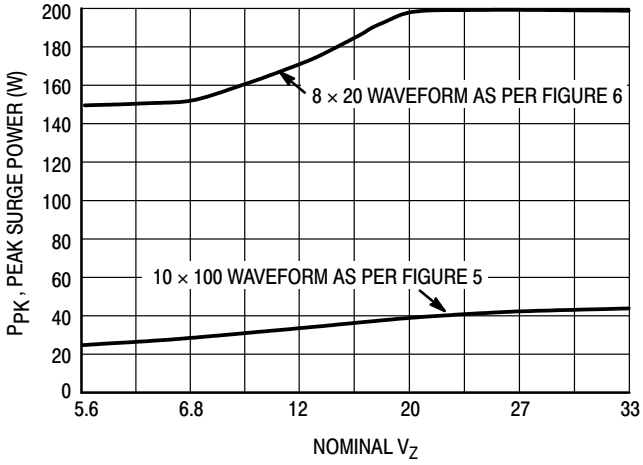

Figure 8. Typical Maximum Non−Repetitive Surge Power, P_{pk} versus V_Z

Power is defined as V_{RSM} x I_Z(pk) where V_{RSM} is the clamping voltage at I_Z(pk).

Share Feedback
Your Opinion Matters

TYPICAL COMMON ANODE APPLICATIONS

A quad junction common anode design in a SC-74 package protects four separate lines using only one package. This adds flexibility and creativity to PCB design especially when board space is at a premium. A simplified example of MMQA/SZMMQA Series Device applications is illustrated below.

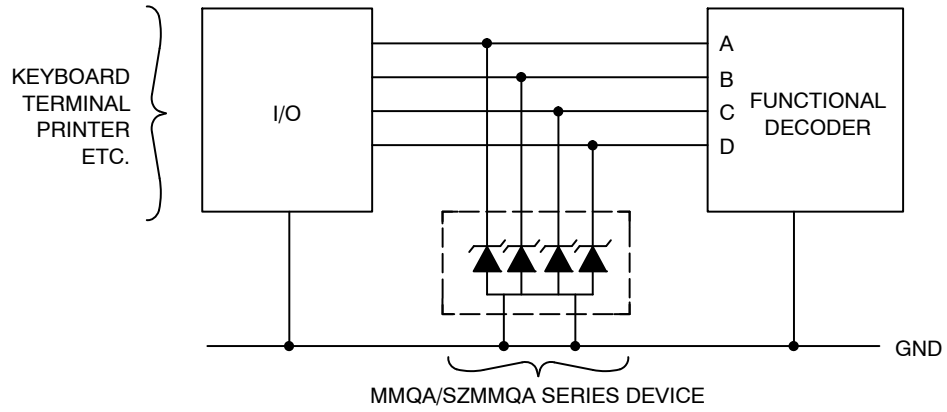

Figure 9. Computer Interface Protection

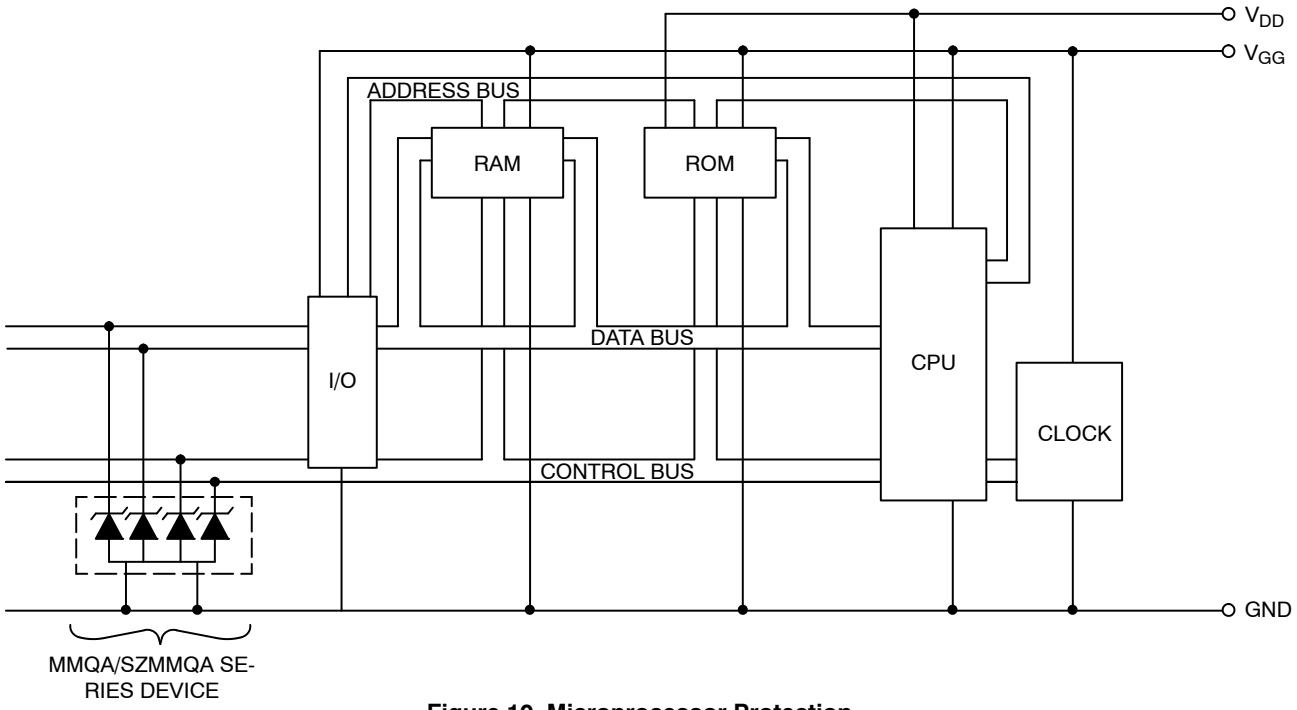

Figure 10. Microprocessor Protection

Share Feedback
Your Opinion Matters

DEVICE MARKING AND ORDERING INFORMATION

Device*	Device Marking	Package	Shipping
MMQA5V6T1G	5A6	SC−74 (Pb−Free)	3,000/Tape & Reel
MMQA6V2T1G	6A2		3,000/Tape & Reel
MMQA6V8T1G	6A8		3,000/Tape & Reel
MMQA12VT1G	12A		3,000/Tape & Reel
MMQA15VT1G	15A		3,000/Tape & Reel
MMQA18VT1G	18A		3,000/Tape & Reel
MMQA20VT1G	20A		3,000/Tape & Reel
MMQA27VT1G	27A		3,000/Tape & Reel
MMQA27VT3G	27A		10,000/Tape & Reel
MMQA33VT1G	33A		3,000/Tape & Reel

DISCONTINUED (Note 9)

Device*	Device Marking	Package	Shipping
MMQA6V2T3G	6A2	SC−74 (Pb−Free)	10,000/Tape & Reel
MMQA13VT1G	13A		3,000/Tape & Reel
MMQA20VT3G	20A		10,000/Tape & Reel
MMQA22VT1G	22A		3,000/Tape & Reel
MMQA24VT1G	24A		3,000/Tape & Reel

†For information on tape and reel specifications, including part orientation and tape sizes, please refer to our Tape and Reel Packaging Specifications Brochure, BRD8011/D.

*IncludeS SZ-prefix devices where applicable.

9. **DISCONTINUED:** This device is not recommended for new design. Please contact your **onsemi** representative for information. The most current information on this device may be available on www.onsemi.com.

Mechanical Characteristics:

CASE: Void−free, Transfer−molded, Thermosetting Plastic Case.
FINISH: Corrosion resistant finish, easily solderable.
Package designed for optimal automated board assembly.
Small package size for high density applications.
Available in 8 mm Tape and Reel.
Use the Device Number to order the 7 inch/3,000 unit reel.
Replace the “T1” with “T3” in the Device Number to order the 13 inch/10,000 unit reel.

Share Feedback
Your Opinion Matters

REVISION HISTORY

Revision	Description of Changes	Date
13	MMQA6V2T3G, MMQA13VT1G, MMQA20VT3G, MMQA22VT1G, MMQA24VT1G OPN Marked as Discontinued + Rebranded the Data Sheet to **onsemi** format	9/3/2025

This document has undergone updates prior to the inclusion of this revision history table. The changes tracked here only reflect updates made on the noted approval dates.

Share Feedback
Your Opinion Matters

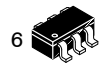

SCALE 2:1

SC−74
CASE 318F
ISSUE P

DATE 07 OCT 2021

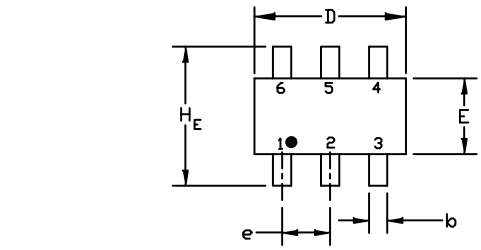

TOP VIEW

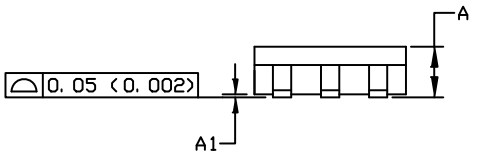

SIDE VIEW

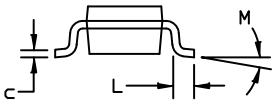

END VIEW

NOTES:
1. DIMENSIONING AND TOLERANCING PER ASME Y14.5M, 1994
2. CONTROLLING DIMENSION: INCHES
3. MAXIMUM LEAD THICKNESS INCLUDES LEAD FINISH THICKNESS. MINIMUM LEAD THICKNESS IS THE MINIMUM THICKNESS OF THE BASE MATERIAL.

	MILLIMETERS			INCHES		
DIM	MIN.	NOM.	MAX.	MIN.	NOM.	MAX.
A	0.90	1.00	1.10	0.035	0.039	0.043
A1	0.01	0.06	0.10	0.001	0.002	0.004
b	0.25	0.37	0.50	0.010	0.015	0.020
c	0.10	0.18	0.26	0.004	0.007	0.010
D	2.90	3.00	3.10	0.114	0.118	0.122
E	1.30	1.50	1.70	0.051	0.059	0.067
e	0.85	0.95	1.05	0.034	0.037	0.041
H_E	2.50	2.75	3.00	0.099	0.108	0.118
L	0.20	0.40	0.60	0.008	0.016	0.024
M	0°	---	10°	0°	---	10°

GENERIC MARKING DIAGRAM*

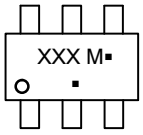

XXX = Specific Device Code
M = Date Code
▪ = Pb−Free Package

(Note: Microdot may be in either location)

*This information is generic. Please refer to device data sheet for actual part marking. Pb−Free indicator, “G” or microdot “▪”, may or may not be present. Some products may not follow the Generic Marking.

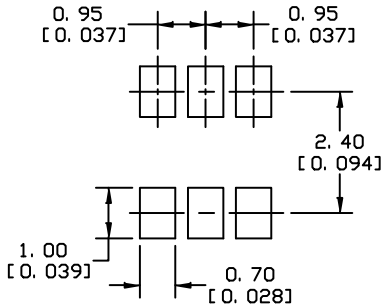

* For additional information on our Pb-Free strategy and soldering details, please download the ON Semiconductor Soldering and Mounting Techniques Reference Manual, SOLDERRM/D.

SOLDERING FOOTPRINT

STYLE 1:
PIN 1. CATHODE
2. ANODE
3. CATHODE
4. CATHODE
5. ANODE
6. CATHODE

STYLE 2:
PIN 1. NO CONNECTION
2. COLLECTOR
3. EMITTER
4. NO CONNECTION
5. COLLECTOR
6. BASE

STYLE 3:
PIN 1. EMITTER 1
2. BASE 1
3. COLLECTOR 2
4. EMITTER 2
5. BASE 2
6. COLLECTOR 1

STYLE 4:
PIN 1. COLLECTOR 2
2. EMITTER 1/EMITTER 2
3. COLLECTOR 1
4. EMITTER 3
5. BASE 1/BASE 2/COLLECTOR 3
6. BASE 3

STYLE 5:
PIN 1. CHANNEL 1
2. ANODE
3. CHANNEL 2
4. CHANNEL 3
5. CATHODE
6. CHANNEL 4

STYLE 6:
PIN 1. CATHODE
2. ANODE
3. CATHODE
4. CATHODE
5. CATHODE
6. CATHODE

STYLE 7:
PIN 1. SOURCE 1
2. GATE 1
3. DRAIN 2
4. SOURCE 2
5. GATE 2
6. DRAIN 1

STYLE 8:
PIN 1. EMITTER 1
2. BASE 2
3. COLLECTOR 2
4. EMITTER 2
5. BASE 1
6. COLLECTOR 1

STYLE 9:
PIN 1. EMITTER 2
2. BASE 2
3. COLLECTOR 1
4. EMITTER 1
5. BASE 1
6. COLLECTOR 2

STYLE 10:
PIN 1. ANODE/CATHODE
2. BASE
3. EMITTER
4. COLLECTOR
5. ANODE
6. CATHODE

STYLE 11:
PIN 1. EMITTER
2. BASE
3. ANODE/CATHODE
4. ANODE
5. CATHODE
6. COLLECTOR

DOCUMENT NUMBER:	**98ASB42973B**	Electronic versions are uncontrolled except when accessed directly from the Document Repository. Printed versions are uncontrolled except when stamped “CONTROLLED COPY” in red.
DESCRIPTION:	**SC−74**	**PAGE 1 OF 1**

onsemi and ONSEMI are trademarks of Semiconductor Components Industries, LLC dba **onsemi** or its subsidiaries in the United States and/or other countries. **onsemi** reserves the right to make changes without further notice to any products herein. **onsemi** makes no warranty, representation or guarantee regarding the suitability of its products for any particular purpose, nor does **onsemi** assume any liability arising out of the application or use of any product or circuit, and specifically disclaims any and all liability, including without limitation special, consequential or incidental damages. **onsemi** does not convey any license under its patent rights nor the rights of others.

onsemi, , and other names, marks, and brands are registered and/or common law trademarks of Semiconductor Components Industries, LLC dba "**onsemi**" or its affiliates and/or subsidiaries in the United States and/or other countries. **onsemi** owns the rights to a number of patents, trademarks, copyrights, trade secrets, and other intellectual property. A listing of **onsemi**'s product/patent coverage may be accessed at www.onsemi.com/site/pdf/Patent−Marking.pdf. **onsemi** reserves the right to make changes at any time to any products or information herein, without notice. The information herein is provided "as−is" and **onsemi** makes no warranty, representation or guarantee regarding the accuracy of the information, product features, availability, functionality, or suitability of its products for any particular purpose, nor does **onsemi** assume any liability arising out of the application or use of any product or circuit, and specifically disclaims any and all liability, including without limitation special, consequential or incidental damages. Buyer is responsible for its products and applications using **onsemi** products, including compliance with all laws, regulations and safety requirements or standards, regardless of any support or applications information provided by **onsemi**. "Typical" parameters which may be provided in **onsemi** data sheets and/or specifications can and do vary in different applications and actual performance may vary over time. All operating parameters, including "Typicals" must be validated for each customer application by customer's technical experts. **onsemi** does not convey any license under any of its intellectual property rights nor the rights of others. **onsemi** products are not designed, intended, or authorized for use as a critical component in life support systems or any FDA Class 3 medical devices or medical devices with a same or similar classification in a foreign jurisdiction or any devices intended for implantation in the human body. Should Buyer purchase or use **onsemi** products for any such unintended or unauthorized application, Buyer shall indemnify and hold **onsemi** and its officers, employees, subsidiaries, affiliates, and distributors harmless against all claims, costs, damages, and expenses, and reasonable attorney fees arising out of, directly or indirectly, any claim of personal injury or death associated with such unintended or unauthorized use, even if such claim alleges that **onsemi** was negligent regarding the design or manufacture of the part. **onsemi** is an Equal Opportunity/Affirmative Action Employer. This literature is subject to all applicable copyright laws and is not for resale in any manner.

ADDITIONAL INFORMATION

TECHNICAL PUBLICATIONS:
Technical Library: www.onsemi.com/design/resources/technical−documentation
onsemi Website: www.onsemi.com

ONLINE SUPPORT: www.onsemi.com/support
For additional information, please contact your local Sales Representative at www.onsemi.com/support/sales