EVVOSEMI®
THINK CHANGE DO

ESD TVS MOS LDO Diode Sensor DC-DC

Product Specification

Domestic Part Number	MJE15031
Overseas Part Number	MJE15031
Equivalent Part Number	MJE15031



Silicon PNP Power Transistor

DESCRIPTION

- With TO-220C package
- Complement to type MJE15028/30
- High transition frequency
- DC Current Gain Specified to 4.0 Amperes
  h_{FE} = 40 (Min) @ I_C =- 3.0 Adc
  h_{FE} = 20 (Min) @ I_C = -4.0 Adc

APPLICATIONS

- Designed for use as high–frequency drivers in audio amplifiers.

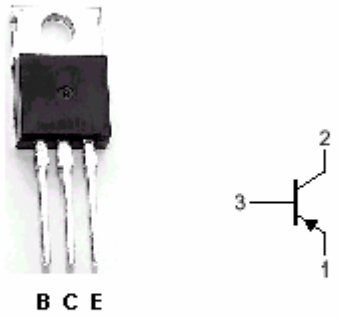

Fig.1 simplified outline (TO-220C) and symbol

PINNING

PIN	DESCRIPTION
1	Emitter
2	Collector;connected to mounting base
3	Base

Absolute maximum ratings (Tc=25℃)

SYMBOL	PARAMETER	CONDITIONS	VALUE	UNIT
V_{CBO}	Collector-base voltage	Open emitter	-150	V
V_{CEO}	Collector-emitter voltage	Open base	-150	V
V_{EBO}	Emitter-base voltage	Open collector	-5	V
I_C	Collector current (DC)		-8	A
I_{CM}	Collector current-Peak		-16	A
I_B	Base current		-2	A
P_D	Total power dissipation	T_a=25℃	2	W
		T_C=25℃	50	
T_j	Junction temperature		150	℃
T_{stg}	Storage temperature		-65~150	℃

THERMAL CHARACTERISTICS

SYMBOL	PARAMETER	MAX	UNIT
$R_{th\ j\text{-}C}$	Thermal resistance ; junction to case	2.5	℃/W
$R_{th\ j\text{-}A}$	Thermal resistance , junction to ambient	62.5	℃/W

Copyright@ 歷芯半導體

CHARACTERISTICS

Tj=25℃ unless otherwise specified

SYMBOL	PARAMETER	CONDITIONS	MIN	TYP.	MAX	UNIT
$V_{CEO(SUS)}$	Collector-emitter sustaining voltage	I_C=-10mA ;I_B=0	-150			V
V_{CEsat}	Collector-emitter saturation voltage	I_C=-1A ;I_B=-0.1A			-0.5	V
V_{BE}	Base-emitter on voltage	I_C=-1A ; V_{CE}=-2V			-1.0	V
I_{CBO}	Collector cut-off current	V_{CB}=-150V; I_E=0			-10	μA
I_{CEO}	Collector cut-off current	V_{CE}=-150V; I_B=0			-0.1	mA
I_{EBO}	Emitter cut-off current	V_{EB}=-5V; I_C=0			-10	μA
h_{FE-1}	DC current gain	I_C=-0.1A ; V_{CE}=-2V	40			
h_{FE-2}	DC current gain	I_C=-2A ; V_{CE}=-2V	40			
h_{FE-3}	DC current gain	I_C=-3A ; V_{CE}=-2V	40			
h_{FE-4}	DC current gain	I_C=-4A ; V_{CE}=-2V	20			
f_T	Transition frequency	I_C=-0.5A;V_{CE}=-10V;f=10MHz	30			MHz

PACKAGE OUTLINE

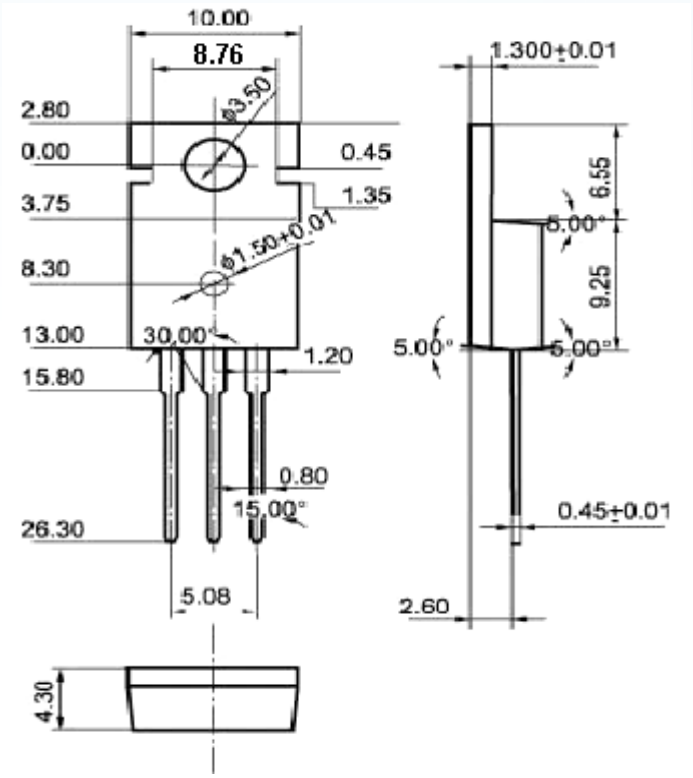

Fig.2 Outline dimensions (unindicated tolerance: ±0.10mm)

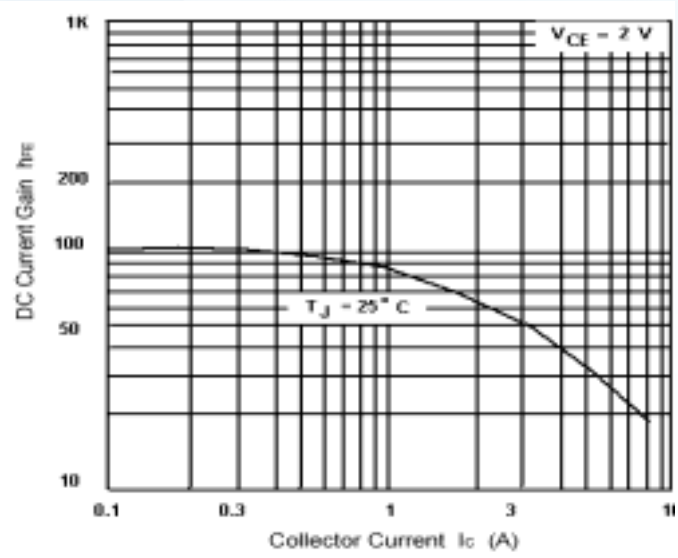

Fig.3 DC current Gain

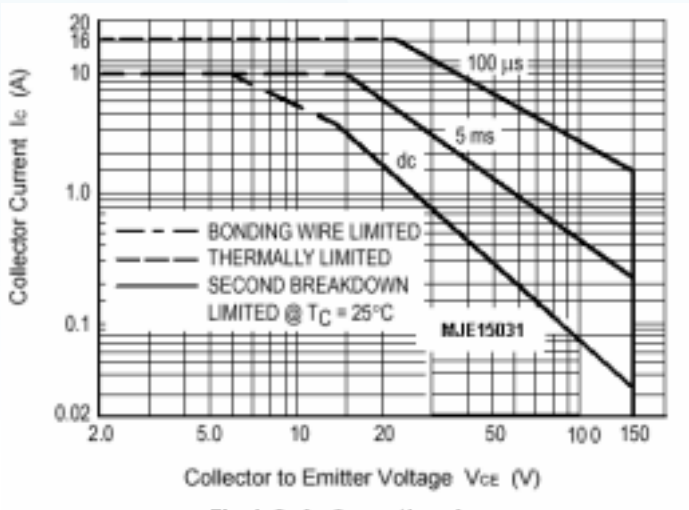

Fig.4 Safe Operating Area

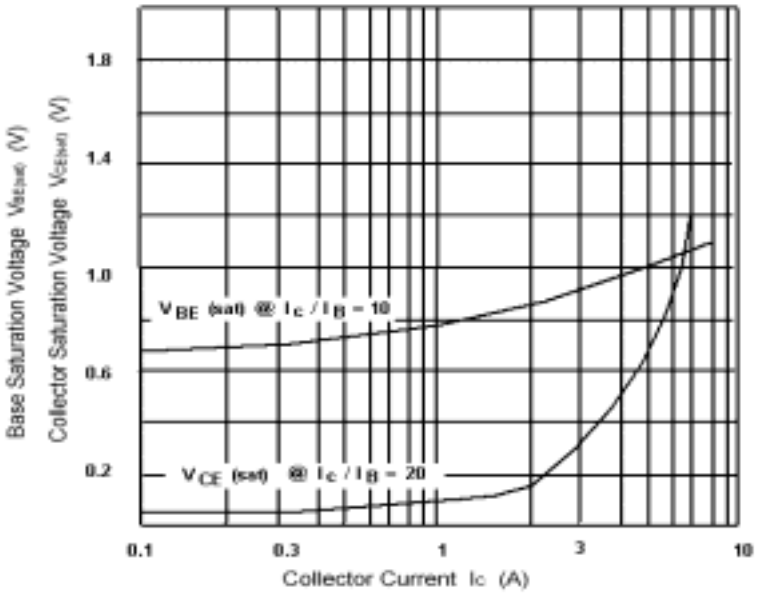

Fig.5 Base-Emitter Saturation Voltage
Collector-Emitter Saturation Voltage

Disclaimer

EVVOSEMI ("EVVO") reserves the right to make corrections, enhancements, improvements, and other changes to its products and services at any time, and to discontinue any product or service without notice.

EVVO warrants the performance of its hardware products to the specifications applicable at the time of sale in accordance with its standard warranty. Testing and other quality control techniques are used as deemed necessary by EVVO to support this warranty. Except where mandated by government requirements, testing of all parameters of each product is not necessarily performed.

Customers should obtain and confirm the latest product information and specifications before final design, purchase, or use. EVVO makes no warranty, representation, or guarantee regarding the suitability of its products for any particular purpose, nor does EVVO assume any liability for application assistance or customer product design. EVVO does not warrant or accept any liability for products that are purchased or used for any unintended or unauthorized application.

EVVO products are not authorized for use as critical components in life support devices or systems without the express written approval of EVVOSEMI.

The EVVO logo and EVVOSEMI are trademarks of EVVOSEMI or its subsidiaries in relevant jurisdictions. EVVO reserves the right to make changes without further notice to any products herein.