Negative Voltage Regulators

1.0 A

MC7900 Series

The MC7900 series of fixed output negative voltage regulators are intended as complements to the popular MC7800 series devices. These negative regulators are available in the same seven−voltage options as the MC7800 devices. In addition, one extra voltage option commonly employed in MECL systems is also available in the negative MC7900 series.

Available in fixed output voltage options from −5.0 V to −24 V, these regulators employ current limiting, thermal shutdown, and safe−area compensation − making them remarkably rugged under most operating conditions. With adequate heatsinking they can deliver output currents in excess of 1.0 A.

- No External Components Required
- Internal Thermal Overload Protection
- Internal Short Circuit Current Limiting
- Output Transistor Safe−Area Compensation
- Available in 2% Voltage Tolerance (See Ordering Information)
- Pb−Free Package May be Available. The G−Suffix Denotes a Pb−Free Lead Finish

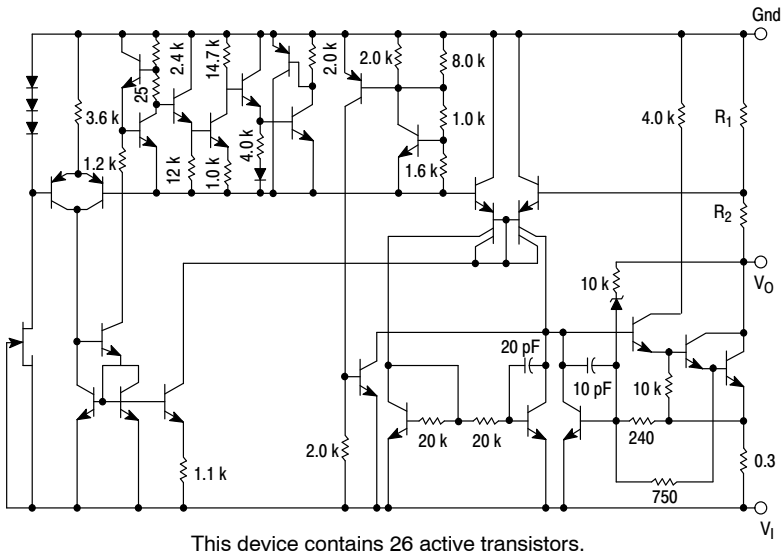

This device contains 26 active transistors.

Figure 1. Representative Schematic Diagram

TO−220
T SUFFIX
CASE 221AB

Heatsink surface connected to Pin 2.

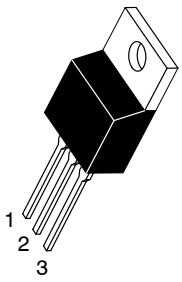

Pin 1. Ground
2. Input
3. Output

D²PAK
D2T SUFFIX
CASE 936

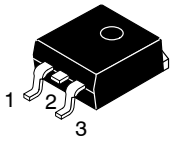

Heatsink surface (shown as terminal 4 in case outline drawing) is connected to Pin 2.

STANDARD APPLICATION

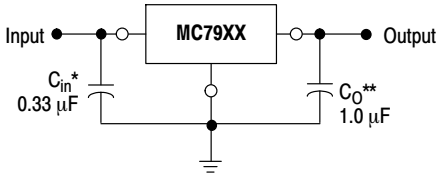

A common ground is required between the input and the output voltages. The input voltage must remain typically 2.0 V above more negative even during the high point of the input ripple voltage.

XX, These two digits of the type number indicate nominal voltage.
* C_{in} is required if regulator is located an appreciable distance from power supply filter.
** C_O improve stability and transient response.

ORDERING INFORMATION

See detailed ordering and shipping information in the package dimensions section on page 11 of this data sheet.

DEVICE MARKING INFORMATION

See general marking information in the device marking section on page 12 of this data sheet.

© Semiconductor Components Industries, LLC, 2013

MAXIMUM RATINGS (T_A = +25°C, unless otherwise noted.)

Rating	Symbol	Value	Unit
Input Voltage (-5.0 V ≥ V_O ≥ -18 V) (24 V)	V_I	−35 −40	Vdc
Power Dissipation Case 221A T_A = +25°C Thermal Resistance, Junction−to−Ambient Thermal Resistance, Junction−to−Case Case 936 (D^2PAK) T_A = +25°C Thermal Resistance, Junction−to−Ambient Thermal Resistance, Junction−to−Case	 P_D θ_{JA} θ_{JC} P_D θ_{JA} θ_{JC}	 Internally Limited 65 5.0 Internally Limited 70 5.0	 W °C/W °C/W W °C/W °C/W
Storage Junction Temperature Range	T_{stg}	−65 to +150	°C
Junction Temperature	T_J	+150	°C

Stresses exceeding those listed in the Maximum Ratings table may damage the device. If any of these limits are exceeded, device functionality should not be assumed, damage may occur and reliability may be affected.

*This device series contains ESD protection and exceeds the following tests:
Human Body Model 2000 V per MIL_STD_883, Method 3015
Machine Model Method 200 V

MC7905B, MC7905C
ELECTRICAL CHARACTERISTICS (V_I = −10 V, I_O = 500 mA, Tlow* < T_J < +125°C, unless otherwise noted.)

Characteristics	Symbol	Min	Typ	Max	Unit
Output Voltage (T_J = +25°C)	V_O	−4.8	−5.0	−5.2	Vdc
Line Regulation (Note 1) (T_J = +25°C, I_O = 100 mA) −7.0 Vdc ≥ V_I ≥ −25 Vdc −8.0 Vdc ≥ V_I ≥ −12 Vdc (T_J = +25°C, I_O = 500 mA) −7.0 Vdc ≥ V_I ≥ −25 Vdc −8.0 Vdc ≥ V_I ≥ −12 Vdc	Reg_{line}	 – – – –	 7.0 2.0 35 8.0	 50 25 100 50	mV
Load Regulation, T_J = +25°C (Note 1) 5.0 mA ≤ I_O ≤ 1.5 A 250 mA ≤ I_O ≤ 750 mA	Reg_{load}	 – –	 11 4.0	 100 50	mV
Output Voltage −7.0 Vdc ≥ V_I ≥ −20 Vdc, 5.0 mA ≤ I_O ≤ 1.0 A, P ≤ 15 W	V_O	 −4.75	 –	 −5.25	Vdc
Input Bias Current (T_J = +25°C)	I_{IB}	–	4.3	8.0	mA
Input Bias Current Change −7.0 Vdc ≥ V_I ≥ −25 Vdc 5.0 mA ≤ I_O ≤ 1.5 A	ΔI_{IB}	 – –	 – –	 1.3 0.5	mA
Output Noise Voltage (T_A = +25°C, 10 Hz ≤ f ≤ 100 kHz)	V_n	–	40	–	μV
Ripple Rejection (I_O = 20 mA, f = 120 Hz)	RR	–	70	–	dB
Dropout Voltage I_O = 1.0 A, T_J = +25°C	V_I−V_O	 –	 1.3	 –	Vdc
Average Temperature Coefficient of Output Voltage I_O = 5.0 mA, Tlow* ≤ T_J ≤ +125°C	$\Delta V_O/\Delta T$	 –	 −1.0	 –	mV/°C

1. Load and line regulation are specified at constant junction temperature. Changes in V_O due to heating effects must be taken into account separately. Pulse testing with low duty cycle is used.

*Tlow = −40°C for MC7905B and Tlow = 0°C for MC7905C.

MC7905AC

ELECTRICAL CHARACTERISTICS (V_I = −10 V, I_O = 500 mA, 0°C < T_J < +125°C, unless otherwise noted.)

Characteristics	Symbol	Min	Typ	Max	Unit
Output Voltage (T_J = +25°C)	V_O	−4.9	−5.0	−5.1	Vdc
Line Regulation (Note 2) −8.0 Vdc ≥ V_I ≥ −12 Vdc; I_O = 1.0 A, T_J = +25°C −8.0 Vdc ≥ V_I ≥ −12 Vdc; I_O = 1.0 A −7.5 Vdc ≥ V_I ≥ −25 Vdc; I_O = 500 mA −7.0 Vdc ≥ V_I ≥ −20 Vdc; I_O = 1.0 A, T_J = +25°C	Reg_{line}	 – – – –	 2.0 7.0 7.0 6.0	 25 50 50 50	mV
Load Regulation (Note 2) 5.0 mA ≤ I_O ≤ 1.5 A, T_J = +25°C 250 mA ≤ I_O ≤ 750 mA 5.0 mA ≤ I_O ≤ 1.0 A	Reg_{load}	 – – –	 11 4.0 9.0	 100 50 100	mV
Output Voltage −7.5 Vdc ≥ V_I ≥ −20 Vdc, 5.0 mA ≤ I_O ≤ 1.0 A, P ≤ 15 W	V_O	 −4.80	 –	 −5.20	Vdc
Input Bias Current	I_{IB}	–	4.4	8.0	mA
Input Bias Current Change −7.5 Vdc ≥ V_I ≥ −25 Vdc 5.0 mA ≤ I_O ≤ 1.0 A 5.0 mA ≤ I_O ≤ 1.5 A, T_J = +25°C	ΔI_{IB}	 – – –	 – – –	 1.3 0.5 0.5	mA
Output Noise Voltage (T_A = +25°C, 10 Hz ≤ f ≤ 100 kHz)	V_n	–	40	–	μV
Ripple Rejection (I_O = mA, f = 120 Hz)	RR	–	70	–	dB
Dropout Voltage (I_O = 1.0 A. T_J = +25°C)	V_I–V_O	–	1.3	–	Vdc
Average Temperature Coefficient of Output Voltage I_O = 5.0 mA, 0°C ≤ T_J ≤ +125°C	$\Delta V_O/\Delta T$	 –	 −1.0	 –	mV/°C

MC7905.2C

ELECTRICAL CHARACTERISTICS (V_I = −10 V, I_O = 500 mA, 0°C < T_J < +125°C, unless otherwise noted.)

Characteristics	Symbol	Min	Typ	Max	Unit
Output Voltage (T_J = +25°C)	V_O	−5.0	−5.2	−5.4	Vdc
Line Regulation (Note 2) (T_J = +25°C, I_O = 100 mA) −7.2 Vdc ≥ V_I ≥ −25 Vdc −8.0 Vdc ≥ V_I ≥ −12 Vdc (T_J = +25°C, I_O = 500 mA) −7.2 Vdc ≥ V_I ≥ −25 Vdc −8.0 Vdc ≥ V_I ≥ −12 Vdc	Reg_{line}	 – – – –	 8.0 2.2 37 8.5	 52 27 105 52	mV
Load Regulation, T_J = +25°C (Note 2) 5.0 mA ≤ I_O ≤ 1.5 A 250 mA ≤ I_O ≤ 750 mA	Reg_{load}	 – –	 12 4.5	 105 52	mV
Output Voltage −7.2 Vdc ≥ V_I ≥ −20 Vdc, 5.0 mA ≤ I_O ≤ 1.0 A, P ≤ 15 W	V_O	 −4.95	 –	 −5.45	Vdc
Input Bias Current (T_J = +25°C)	I_{IB}	–	4.3	8.0	mA
Input Bias Current Change −7.2 Vdc ≥ V_I ≥ −25 Vdc 5.0 mA ≤ I_O ≤ 1.5 A	ΔI_{IB}	 – –	 – –	 1.3 0.5	mA
Output Noise Voltage (T_A = +25°C, 10 Hz ≤ f ≤ 100 kHz)	V_n	–	42	–	μV
Ripple Rejection (I_O = 20 mA, f = 120 Hz)	RR	–	68	–	dB
Dropout Voltage (I_O = 1.0 A, T_J = +25°C)	V_I–V_O	–	1.3	–	Vdc
Average Temperature Coefficient of Output Voltage I_O = 5.0 mA, 0°C ≤ T_J ≤ +125°C	$\Delta V_O/\Delta T$	 –	 −1.0	 –	mV/°C

2. Load and line regulation are specified at constant junction temperature. Changes in V_O due to heating effects must be taken into account separately. Pulse testing with low duty cycle is used.

MC7906C
ELECTRICAL CHARACTERISTICS (V_I = −11 V, I_O = 500 mA, 0°C < T_J < +125°C, unless otherwise noted.)

Characteristics	Symbol	Min	Typ	Max	Unit
Output Voltage (T_J = +25°C)	V_O	−5.75	−6.0	−6.25	Vdc
Line Regulation (Note 3) (T_J = +25°C, I_O = 100 mA) −8.0 Vdc ≥ V_I ≥ −25 Vdc −9.0 Vdc ≥ V_I ≥ −13 Vdc (T_J = +25°C, I_O = 500 mA) −8.0 Vdc ≥ V_I ≥ −25 Vdc −9.0 Vdc ≥ V_I ≥ −13 Vdc	Reg_{line}	 – – – –	 9.0 3.0 43 10	 60 30 120 60	mV
Load Regulation, T_J = +25°C (Note 3) 5.0 mA ≤ I_O ≤ 1.5 A 250 mA ≤ I_O ≤ 750 mA	Reg_{load}	 – –	 13 5.0	 120 60	mV
Output Voltage −8.0 Vdc ≥ V_I ≥ −21 Vdc, 5.0 mA ≤ I_O ≤ 1.0 A, P ≤ 15 W	V_O	−5.7	–	−6.3	Vdc
Input Bias Current (T_J = +25°C)	I_{IB}	–	4.3	8.0	mA
Input Bias Current Change −8.0 Vdc ≥ V_I ≥ −25 Vdc 5.0 mA ≤ I_O ≤ 1.5 A	ΔI_{IB}	 – –	 – –	 1.3 0.5	mA
Output Noise Voltage (T_A = +25°C, 10 Hz ≤ f ≤ 100 kHz)	V_n	–	45	–	μV
Ripple Rejection (I_O = 20 mA, f = 120 Hz)	RR	–	65	–	dB
Dropout Voltage (I_O = 1.0 A, T_J = +25°C)	V_I–V_O	–	1.3	–	Vdc
Average Temperature Coefficient of Output Voltage I_O = 5.0 mA, 0°C ≤ T_J ≤ +125°C	$\Delta V_O/\Delta T$	 –	 −1.0	 –	mV/°C

MC7908C
ELECTRICAL CHARACTERISTICS (V_I = −14 V, I_O = 500 mA, 0°C < T_J < +125°C, unless otherwise noted.)

Characteristics	Symbol	Min	Typ	Max	Unit
Output Voltage (T_J = +25°C)	V_O	−7.7	−8.0	−8.3	Vdc
Line Regulation (Note 3) (T_J = +25°C, I_O = 100 mA) −10.5 Vdc ≥ V_I ≥ −25 Vdc −11 Vdc ≥ V_I ≥ −17 Vdc (T_J = +25°C, I_O = 500 mA) −10.5 Vdc ≥ V_I ≥ −25 Vdc −11 Vdc ≥ V_I ≥ −17 Vdc	Reg_{line}	 – – – –	 12 5.0 50 22	 80 40 160 80	mV
Load Regulation, T_J = +25°C (Note 3) 5.0 mA ≤ I_O ≤ 1.5 A 250 mA ≤ I_O ≤ 750 mA	Reg_{load}	 – –	 26 9.0	 160 80	mV
Output Voltage −10.5 Vdc ≥ V_I ≥ −23 Vdc, 5.0 mA ≤ I_O ≤ 1.0 A, P ≤ 15 W	V_O	−7.6	–	−8.4	Vdc
Input Bias Current (T_J = +25°C)	I_{IB}	–	4.3	8.0	mA
Input Bias Current Change −10.5 Vdc ≥ V_I ≥ −25 Vdc 5.0 mA ≤ I_O ≤ 1.5 A	ΔI_{IB}	 – –	 – –	 1.0 0.5	mA
Output Noise Voltage (T_A = +25°C, 10 Hz ≤ f ≤ 100 kHz)	V_n	–	52	–	μV
Ripple Rejection (I_O = 20 mA, f = 120 Hz)	RR	–	62	–	dB
Dropout Voltage (I_O = 1.0 A, T_J = +25°C)	V_I–V_O	–	1.3	–	Vdc
Average Temperature Coefficient of Output Voltage I_O = 5.0 mA, 0°C ≤ T_J ≤ +125°C	$\Delta V_O/\Delta T$	 –	 −1.0	 –	mV/°C

3. Load and line regulation are specified at constant junction temperature. Changes in V_O due to heating effects must be taken into account separately. Pulse testing with low duty cycle is used.

MC7912B, MC7912C
ELECTRICAL CHARACTERISTICS (V_I = −19 V, I_O = 500 mA, Tlow* < T_J < +125°C, unless otherwise noted.)

Characteristics	Symbol	Min	Typ	Max	Unit
Output Voltage (T_J = +25°C)	V_O	−11.5	−12	−12.5	Vdc
Line Regulation (Note 4) (T_J = +25°C, I_O = 100 mA) −14.5 Vdc ≥ V_I ≥ −30 Vdc −16 Vdc ≥ V_I ≥ −22 Vdc (T_J = +25°C, I_O = 500 mA) −14.5 Vdc ≥ V_I ≥ −30 Vdc −16 Vdc ≥ V_I ≥ −22 Vdc	Reg_{line}	 – – – –	 13 6.0 55 24	 120 60 240 120	mV
Load Regulation, T_J = +25°C (Note 4) 5.0 mA ≤ I_O ≤ 1.5 A 250 mA ≤ I_O ≤ 750 mA	Reg_{load}	 – –	 46 17	 240 120	mV
Output Voltage −14.5 Vdc ≥ V_I ≥ −27 Vdc, 5.0 mA ≤ I_O ≤ 1.0 A, P ≤ 15 W	V_O	 −11.4	 –	 −12.6	Vdc
Input Bias Current (T_J = +25°C)	I_{IB}	–	4.4	8.0	mA
Input Bias Current Change −14.5 Vdc ≥ V_I ≥ −30 Vdc 5.0 mA ≤ I_O ≤ 1.5 A	ΔI_{IB}	 – –	 – –	 1.0 0.5	mA
Output Noise Voltage (T_A = +25°C, 10 Hz ≤ f ≤ 100 kHz)	V_n	–	75	–	μV
Ripple Rejection (I_O = 20 mA, f = 120 Hz)	RR	–	61	–	dB
Dropout Voltage (I_O = 1.0 A, T_J = +25°C)	V_I–V_O	–	1.3	–	Vdc
Average Temperature Coefficient of Output Voltage I_O = 5.0 mA, Tlow* ≤ T_J ≤ +125°C	$\Delta V_O/\Delta T$	 –	 −1.0	 –	mV/°C

MC7912AC
ELECTRICAL CHARACTERISTICS (V_I = −19 V, I_O = 500 mA, Tlow* < T_J < +125°C, unless otherwise noted.)

Characteristics	Symbol	Min	Typ	Max	Unit
Output Voltage (T_J = +25°C)	V_O	−11.75	−12	−12.25	Vdc
Line Regulation (Note 4) −16 Vdc ≥ V_I ≥ −22 Vdc; I_O = 1.0 A, T_J = +25°C −16 Vdc ≥ V_I ≥ −22 Vdc; I_O = 1.0 A −14.8 Vdc ≥ V_I ≥ −30 Vdc; I_O = 500 mA −14.5 Vdc ≥ V_I ≥ −27 Vdc; I_O = 1.0 A, T_J = +25°C	Reg_{line}	 – – – –	 6.0 24 24 13	 60 120 120 120	mV
Load Regulation (Note 4) 5.0 mA ≤ I_O ≤ 1.5 A, T_J = +25°C 250 mA ≤ I_O ≤ 750 mA 5.0 mA ≤ I_O ≤ 1.0 A	Reg_{load}	 – – –	 46 17 35	 150 75 150	mV
Output Voltage −14.8 Vdc ≥ V_I ≥ −27 Vdc, 5.0 mA ≤ I_O ≤ 1.0 A, P ≤ 15 W	V_O	 −11.5	 –	 −12.5	Vdc
Input Bias Current	I_{IB}	–	4.4	8.0	mA
Input Bias Current Change −15 Vdc ≥ V_I ≥ −30 Vdc 5.0 mA ≤ I_O ≤ 1.0 A 5.0 mA ≤ I_O ≤ 1.5 A, T_J = +25°C	ΔI_{IB}	 – – –	 – – –	 0.8 0.5 0.5	mA
Output Noise Voltage (T_A = +25°C, 10 Hz ≤ f ≤ 100 kHz)	V_n	–	75	–	μV
Ripple Rejection (I_O = 20 mA, f = 120 Hz)	RR	–	61	–	dB
Dropout Voltage (I_O = 1.0 A, T_J = +25°C)	V_I–V_O	–	1.3	–	Vdc
Average Temperature Coefficient of Output Voltage I_O = 5.0 mA, Tlow* ≤ T_J ≤ +125°C	$\Delta V_O/\Delta T$	 –	 −1.0	 –	mV/°C

4. Load and line regulation are specified at constant junction temperature. Changes in V_O due to heating effects must be taken into account separately. Pulse testing with low duty cycle is used.

*Tlow = −40°C for MC7912B and Tlow = 0°C for MC7912C.

MC7915B, MC7915C
ELECTRICAL CHARACTERISTICS (V_I = −23 V, I_O = 500 mA, Tlow* < T_J < +125°C, unless otherwise noted.)

Characteristics	Symbol	Min	Typ	Max	Unit
Output Voltage (T_J = +25°C)	V_O	−14.4	−15	−15.6	Vdc
Line Regulation (Note 5) (T_J = +25°C, I_O = 100 mA) −17.5 Vdc ≥ V_I ≥ −30 Vdc −20 Vdc ≥ V_I ≥ −26 Vdc (T_J = +25°C, I_O = 500 mA) −17.5 Vdc ≥ V_I ≥ −30 Vdc −20 Vdc ≥ V_I ≥ −26 Vdc	Reg_{line}	 – – – –	 14 6.0 57 27	 150 75 300 150	mV
Load Regulation, T_J = +25°C (Note 5) 5.0 mA ≤ I_O ≤ 1.5 A 250 mA ≤ I_O ≤ 750 mA	Reg_{load}	 – –	 68 25	 300 150	mV
Output Voltage −17.5 Vdc ≥ V_I ≥ −30 Vdc, 5.0 mA ≤ I_O ≤ 1.0 A, P ≤ 15 W	V_O	−14.25	–	−15.75	Vdc
Input Bias Current (T_J = +25°C)	I_{IB}	–	4.4	8.0	mA
Input Bias Current Change −17.5 Vdc ≥ V_I ≥ −30 Vdc 5.0 mA ≤ I_O ≤ 1.5 A	ΔI_{IB}	 – –	 – –	 1.0 0.5	mA
Output Noise Voltage (T_A = +25°C, 10 Hz ≤ f ≤ 100 kHz)	V_n	–	90	–	μV
Ripple Rejection (I_O = 20 mA, f = 120 Hz)	RR	–	60	–	dB
Dropout Voltage (I_O = 1.0 A, T_J = +25°C)	V_I–V_O	–	1.3	–	Vdc
Average Temperature Coefficient of Output Voltage I_O = 5.0 mA, Tlow* ≤ T_J ≤ +125°C	$\Delta V_O/\Delta T$	 –	 −1.0	 –	mV/°C

MC7915AC
ELECTRICAL CHARACTERISTICS (V_I = −23 V, I_O = 500 mA, Tlow* < T_J < +125°C, unless otherwise noted.)

Characteristics	Symbol	Min	Typ	Max	Unit
Output Voltage (T_J = +25°C)	V_O	−14.7	−15	−15.3	Vdc
Line Regulation (Note 5) −20 Vdc ≥ V_I ≥ −26 Vdc, I_O = 1.0 A, T_J = +25°C −20 Vdc ≥ V_I ≥ −26 Vdc, I_O = 1.0 A, −17.9 Vdc ≥ V_I ≥ −30 Vdc, I_O = 500 mA −17.5 Vdc ≥ V_I ≥ −30 Vdc, I_O = 1.0 A, T_J = +25°C	Reg_{line}	 – – – –	 27 57 57 57	 75 150 150 150	mV
Load Regulation (Note 5) 5.0 mA ≤ I_O ≤ 1.5 A, T_J = +25°C 250 mA ≤ I_O ≤ 750 mA 5.0 mA ≤ I_O ≤ 1.0 A	Reg_{load}	 – – –	 68 25 40	 150 75 150	mV
Output Voltage −17.9 Vdc ≥ V_I ≥ −30 Vdc, 5.0 mA ≤ I_O ≤ 1.0 A, P ≤ 15 W	V_O	−14.4	–	−15.6	Vdc
Input Bias Current	I_{IB}	–	4.4	8.0	mA
Input Bias Current Change −17.5 Vdc ≥ V_I ≥ −30 Vdc 5.0 mA ≤ I_O ≤ 1.0 A 5.0 mA ≤ I_O ≤ 1.5 A, T_J = +25°C	ΔI_{IB}	 – – –	 – – –	 0.8 0.5 0.5	mA
Output Noise Voltage (T_A = +25°C, 10 Hz ≤ f ≤ 100 kHz)	V_n	–	90	–	μV
Ripple Rejection (I_O = 20 mA, f = 120 Hz)	RR	–	60	–	dB
Dropout Voltage (I_O = 1.0 A, T_J = +25°C)	V_I–V_O	–	1.3	–	Vdc
Average Temperature Coefficient of Output Voltage I_O = 5.0 mA, Tlow* ≤ T_J ≤ +125°C	$\Delta V_O/\Delta T$	 –	 −1.0	 –	mV/°C

5. Load and line regulation are specified at constant junction temperature. Changes in V_O due to heating effects must be taken into account separately. Pulse testing with low duty cycle is used.

*Tlow = −40°C for MC7915B and Tlow = 0°C for MC7915C.

MC7918C
ELECTRICAL CHARACTERISTICS (V_I = −27 V, I_O = 500 mA, 0°C < T_J < +125°C, unless otherwise noted.)

Characteristics	Symbol	Min	Typ	Max	Unit
Output Voltage (T_J = +25°C)	V_O	−17.3	−18	−18.7	Vdc
Line Regulation (Note 6) (T_J = +25°C, I_O = 100 mA) −21 Vdc ≥ V_I ≥ −33 Vdc −24 Vdc ≥ V_I ≥ −30 Vdc (T_J = +25°C, I_O = 500 mA) −21 Vdc ≥ V_I ≥ −33 Vdc −24 Vdc ≥ V_I ≥ −30 Vdc	Reg_{line}	 – – – –	 25 10 90 50	 180 90 360 180	mV
Load Regulation, T_J = +25°C (Note 6) 5.0 mA ≤ I_O ≤ 1.5 A 250 mA ≤ I_O ≤ 750 mA	Reg_{load}	 – –	 110 55	 360 180	mV
Output Voltage −21 Vdc ≥ V_I ≥ −33 Vdc, 5.0 mA ≤ I_O ≤ 1.0 A, P ≤ 15 W	V_O	 −17.1	 –	 −18.9	Vdc
Input Bias Current (T_J = +25°C)	I_{IB}	–	4.5	8.0	mA
Input Bias Current Change −21 Vdc ≥ V_I ≥ −33 Vdc 5.0 mA ≤ I_O ≤ 1.5 A	ΔI_{IB}	 – –	 – –	 1.0 0.5	mA
Output Noise Voltage (T_A = +25°C, 10 Hz ≤ f ≤ 100 kHz)	V_n	–	110	–	μV
Ripple Rejection (I_O = 20 mA, f = 120 Hz)	RR	–	59	–	dB
Dropout Voltage (I_O = 1.0 A, T_J = +25°C)	V_I–V_O	–	1.3	–	Vdc
Average Temperature Coefficient of Output Voltage I_O = 5.0 mA, 0°C ≤ T_J ≤ +125°C	$\Delta V_O/\Delta T$	 –	 −1.0	 –	mV/°C

MC7924B, MC7924C
ELECTRICAL CHARACTERISTICS (V_I = −33 V, I_O = 500 mA, Tlow* < T_J < +125°C, unless otherwise noted.)

Characteristics	Symbol	Min	Typ	Max	Unit
Output Voltage (T_J = +25°C)	V_O	−23	−24	−25	Vdc
Line Regulation (Note 6) (T_J = +25°C, I_O = 100 mA) −27 Vdc ≥ V_I ≥ −38 Vdc −30 Vdc ≥ V_I ≥ −36 Vdc (T_J = +25°C, I_O = 500 mA) −27 Vdc ≥ V_I ≥ −38 Vdc −30 Vdc ≥ V_I ≥ −36 Vdc	Reg_{line}	 – – – –	 31 14 118 70	 240 120 470 240	mV
Load Regulation, T_J = +25°C (Note 6) 5.0 mA ≤ I_O ≤ 1.5 A 250 mA ≤ I_O ≤ 750 mA	Reg_{load}	 – –	 150 85	 480 240	mV
Output Voltage −27 Vdc ≥ V_I ≥ −38 Vdc, 5.0 mA ≤ I_O ≤ 1.0 A, P ≤ 15 W	V_O	 −22.8	 –	 −25.2	Vdc
Input Bias Current (T_J = +25°C)	I_{IB}	–	4.6	8.0	mA
Input Bias Current Change −27 Vdc ≥ V_I ≥ −38 Vdc 5.0 mA ≤ I_O ≤ 1.5 A	ΔI_{IB}	 – –	 – –	 1.0 0.5	mA
Output Noise Voltage (T_A = +25°C, 10 Hz ≤ f ≤ 100 kHz)	V_n	–	170	–	μV
Ripple Rejection (I_O = 20 mA, f = 120 Hz)	RR	–	56	–	dB
Dropout Voltage (I_O = 1.0 A, T_J = +25°C)	V_I–V_O	–	1.3	–	Vdc
Average Temperature Coefficient of Output Voltage I_O = 5.0 mA, Tlow* ≤ T_J ≤ +125°C	$\Delta V_O/\Delta T$	 –	 −1.0	 –	mV/°C

6. Load and line regulation are specified at constant junction temperature. Changes in V_O due to heating effects must be taken into account separately. Pulse testing with low duty cycle is used.

*Tlow = −40°C for MC7924B and Tlow = 0°C for MC7924C.

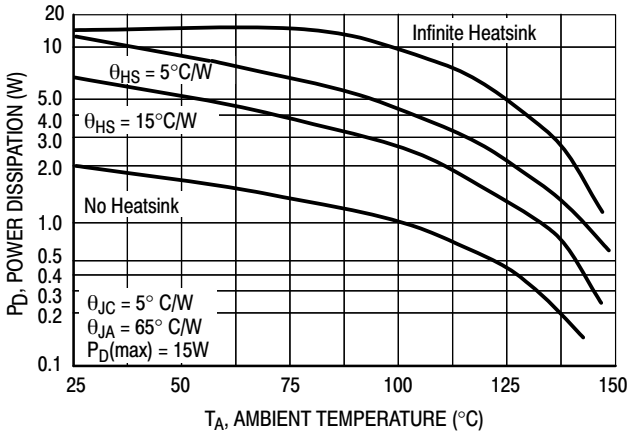

Figure 2. Worst Case Power Dissipation as a Function of Ambient Temperature

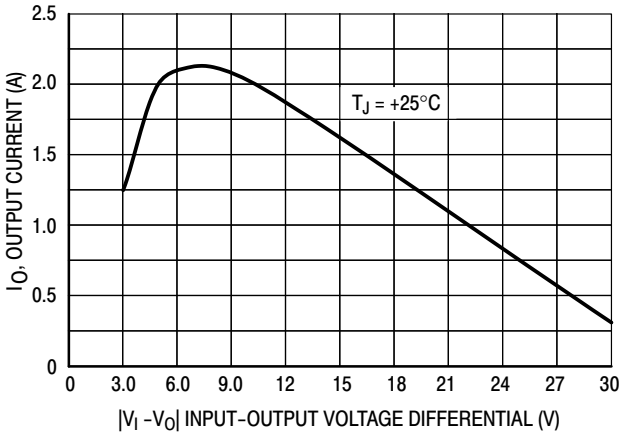

Figure 3. Peak Output Current as a Function of Input−Output Differential Voltage

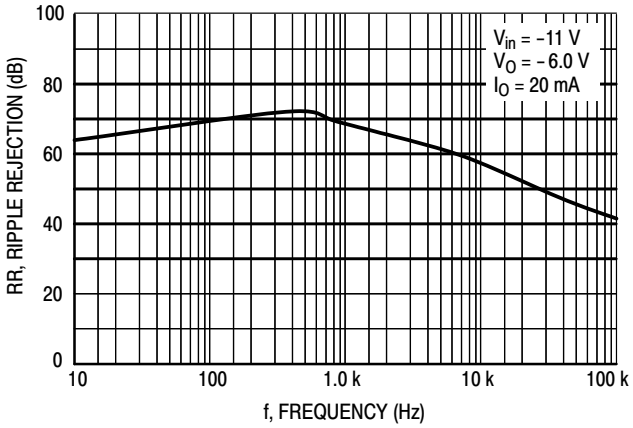

Figure 4. Ripple Rejection as a Function of Frequency

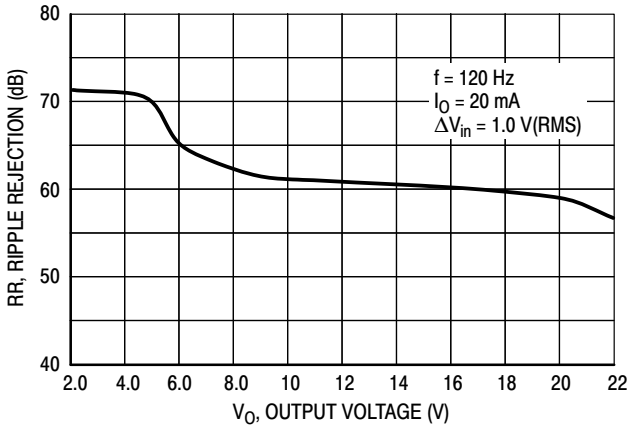

Figure 5. Ripple Rejection as a Function of Output Voltage

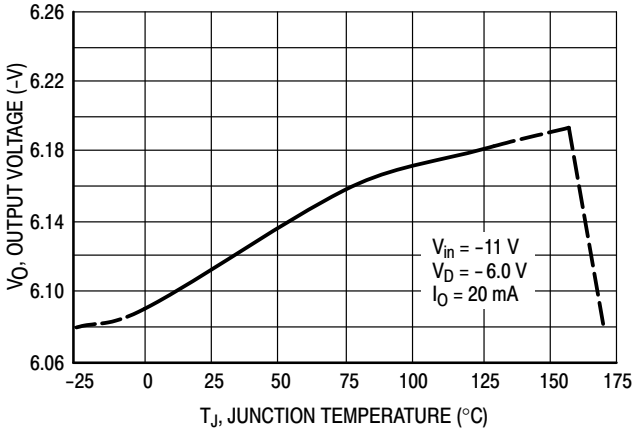

Figure 6. Output Voltage as a Function of Junction Temperature

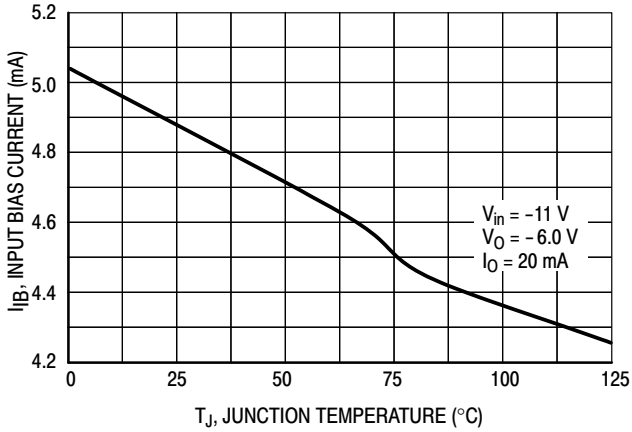

Figure 7. Quiescent Current as a Function of Temperature

APPLICATIONS INFORMATION

Design Considerations

The MC7900 Series of fixed voltage regulators are designed with Thermal overload Protection that shuts down the circuit when subjected to an excessive power overload condition. Internal Short Circuit Protection that limits the maximum current the circuit will pass, and Output Transistor Safe−Area Compensation that reduces the output short circuit current as the voltage across the pass transistor is increased.

In many low current applications, compensation capacitors are not required. However, it is recommended that the regulator input be bypassed with a capacitor if the regulator is connected to the power supply filter with long wire lengths, or if the output load capacitance is large. An input bypass capacitor should be selected to provide good high−frequency characteristics to insure stable operation under all load conditions. A 0.33 μF or larger tantalum, mylar, or other capacitor having low internal impedance at high frequencies should be chosen. The capacitor chosen should have an equivalent series resistance of less than 0.7 Ω. The bypass capacitor should be mounted with the shortest possible leads directly across the regulators input terminals. Normally good construction techniques should be used to minimize ground loops and lead resistance drops since the regulator has no external sense lead. Bypassing the output is also recommended.

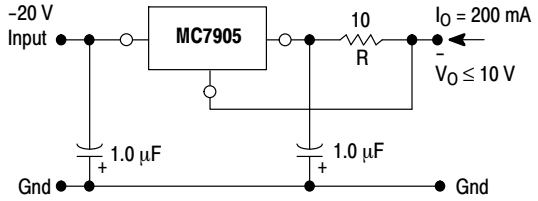

Figure 8. Current Regulator

The MC7905, −5.0 V regulator can be used as a constant current source when connected as above. The output current is the sum of resistor R current and quiescent bias current as follows:

$$I_O = \frac{5.0\ V}{R} + I_B$$

The quiescent current for this regulator is typically 4.3 mA. The 5.0 V regulator was chosen to minimize dissipation and to allow the output voltage to operate to within 6.0 V below the input voltage.

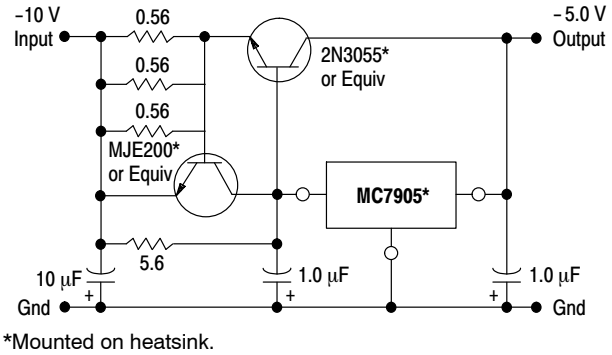

*Mounted on heatsink.

Figure 9. Current Boost Regulator

(−5.0 V @ 4.0 A, with 5.0 A Current Limiting)

When a boost transistor is used, short circuit currents are equal to the sum of the series pass and regulator limits, which are measured at 3.2 A and 1.8 A respectively in this case. Series pass limiting is approximately equal to 0.6 V/R_{SC}. Operation beyond this point to the peak current capability of the MC7905C is possible if the regulator is mounted on a heatsink; otherwise thermal shutdown will occur when the additional load current is picked up by the regulator.

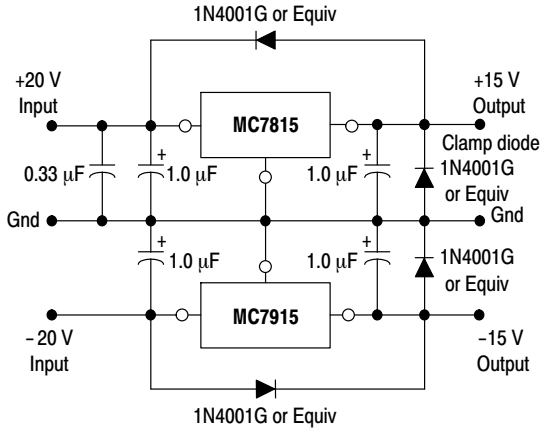

Figure 10. Operational Amplifier Supply

The MC7815 and MC7915 positive and negative regulators may be connected as shown to obtain a dual power supply for operational amplifiers. A clamp diode should be used at the output of the MC7815 to prevent potential latch−up problems whenever the output of the positive regulator (MC7815) is drawn below ground with an output current greater than 200 mA.

Protection Diodes

When external capacitors are used with MC7900 series regulator it is sometimes necessary to add protection diodes to prevent the capacitors from discharging through low current points into the regulator or from output polarity reversals. Generally, no protection diode is required for values of output capacitance less then 10μF. Figure 11 shows the MC7915 with the recommended protection diodes.

- Opposite Polarity Protection

Diode D1 protects the regulator from output polarity reversals during startup, power off and short-circuit operation.

- Reverse-bias Protection

Diode D2 prevents output capacitor from discharging thru the MC7915 during an input short circuit or fast switch off of power supply.

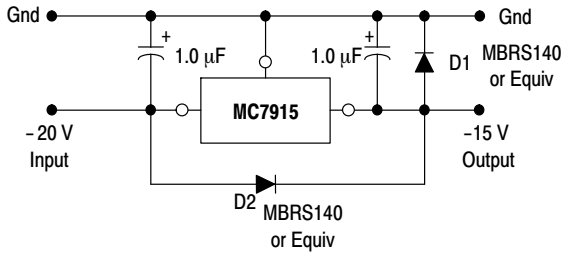

Figure 11. Protection Diodes

DEFINITIONS

Line Regulation – The change in output voltage for a change in the input voltage. The measurement is made under conditions of low dissipation or by using pulse techniques such that the average chip temperature is not significantly affected.

Load Regulation – The change in output voltage for a change in load current at constant chip temperature.

Maximum Power Dissipation – The maximum total device dissipation for which the regulator will operate within specifications.

Input Bias Current – That part of the input current that is not delivered to the load.

Output Noise Voltage – The rms AC voltage at the output, with constant load and no input ripple, measured over a specified frequency range.

Long Term Stability – Output voltage stability under accelerated life test conditions with the maximum rated voltage listed in the devices' electrical characteristics and maximum power dissipation.

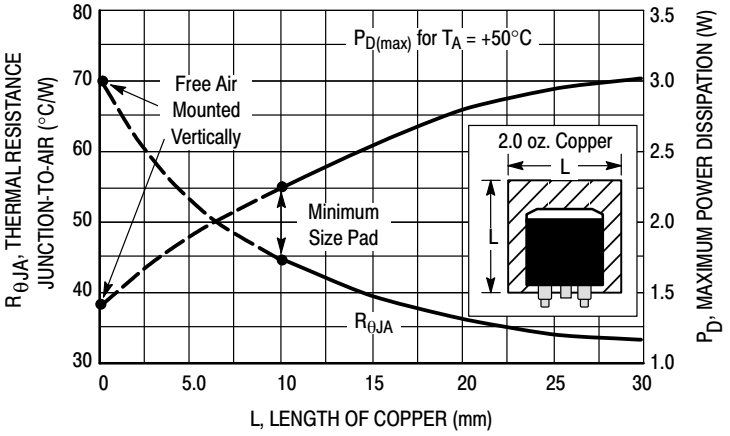

Figure 12. D²PAK Thermal Resistance and Maximum Power Dissipation versus P.C.B. Copper Length

ORDERING INFORMATION

Device	Nominal Output Voltage	Output Voltage Tolerance	Package	Operating Temperature Range	Shipping†
MC7905ACD2TR4G	−5.0 V	2%	D^2PAK (Pb−Free)	T_J = 0°C to +125°C	800 Tape & Reel
MC7905BTG		4%	TO−220 (Pb−Free)	T_J = −40°C to +125°C	50 Units/Rail
MC7905CTG			TO−220 (Pb−Free)	T_J = 0°C to +125°C	50 Units/Rail
MC7906CTG	−6.0 V	4%	TO−220 (Pb−Free)	T_J = 0°C to +125°C	50 Units/Rail
MC7912ACTG	−12 V	2%	TO−220 (Pb−Free)	T_J = 0°C to +125°C	50 Units/Rail
MC7912BD2TR4G		4%	D^2PAK (Pb−Free)	T_J = −40°C to +125°C	800 Tape & Reel
MC7912BTG			TO−220 (Pb−Free)		50 Units/Rail
MC7912CTG			TO−220 (Pb−Free)	T_J = 0°C to +125°C	50 Units/Rail
MC7915ACD2TG	− 15 V	2%	D^2PAK (Pb−Free)	T_J = 0°C to +125°C	50 Units/Rail
MC7915ACD2TR4G			D^2PAK (Pb−Free)		800 Tape & Reel
MC7915ACTG			TO−220 (Pb−Free)		50 Units/Rail
MC7915BTG		4%	TO−220 (Pb−Free)	T_J = −40°C to +125°C	50 Units/Rail
MC7915BD2TR4G			D^2PAK (Pb−Free)		800 Tape & Reel
MC7915CD2TR4G			D^2PAK (Pb−Free)	T_J = 0°C to +125°C	800 Tape & Reel
MC7915CTG			TO−220 (Pb−Free)		50 Units/Rail
MC7918CTG			TO−220 (Pb−Free)		50 Units/Rail

†For information on tape and reel specifications, including part orientation and tape sizes, please refer to our Tape and Reel Packaging Specifications Brochure, BRD8011/D.

MARKING DIAGRAMS

TO−220
T SUFFIX
CASE 221AB

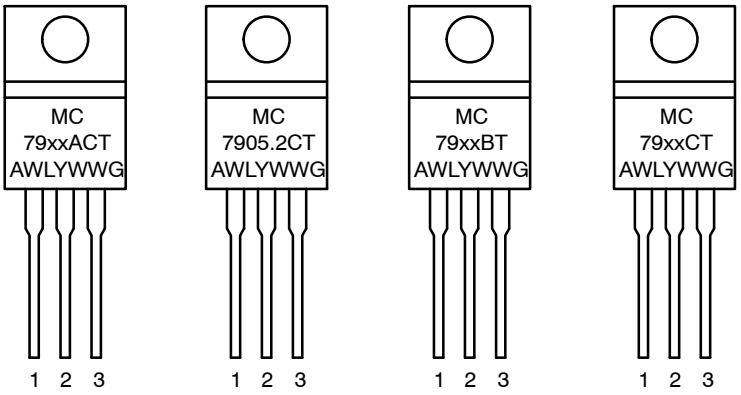

D²PAK
D2T SUFFIX
CASE 936

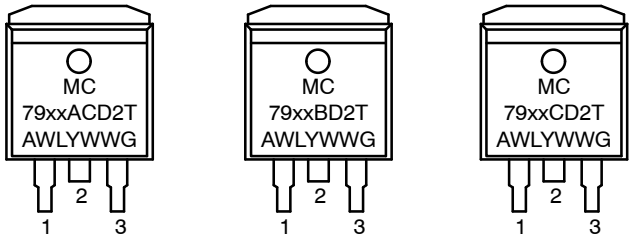

xx	= Nominal Voltage
A	= Assembly Location
WL	= Wafer Lot
Y	= Year
WW	= Work Week
G	= Pb−Free Device

TO−220, SINGLE GAUGE
CASE 221AB
ISSUE A

DATE 16 NOV 2010

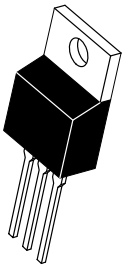

SCALE 1:1

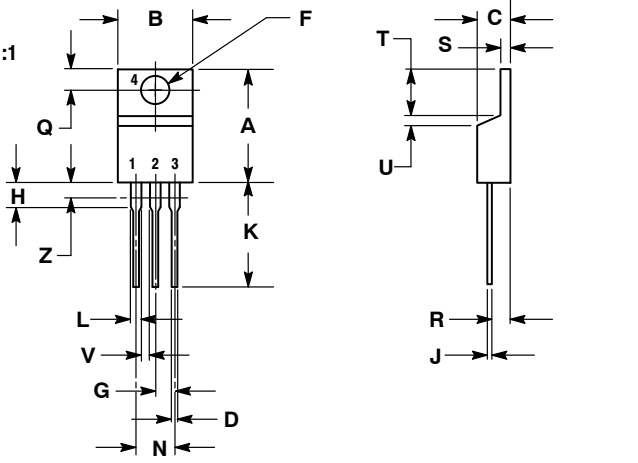

NOTES:
1. DIMENSIONING AND TOLERANCING PER ANSI Y14.5M, 1982.
2. CONTROLLING DIMENSION: INCHES.
3. DIMENSION Z DEFINES A ZONE WHERE ALL BODY AND LEAD IRREGULARITIES ARE ALLOWED.
4. PRODUCT SHIPPED PRIOR TO 2008 HAD DIMENSIONS S = 0.045 – 0.055 INCHES (1.143 – 1.397 MM)

	INCHES		MILLIMETERS	
DIM	MIN	MAX	MIN	MAX
A	0.570	0.620	14.48	15.75
B	0.380	0.405	9.66	10.28
C	0.160	0.190	4.07	4.82
D	0.025	0.035	0.64	0.88
F	0.142	0.147	3.61	3.73
G	0.095	0.105	2.42	2.66
H	0.110	0.155	2.80	3.93
J	0.018	0.025	0.46	0.64
K	0.500	0.562	12.70	14.27
L	0.045	0.060	1.15	1.52
N	0.190	0.210	4.83	5.33
Q	0.100	0.120	2.54	3.04
R	0.080	0.110	2.04	2.79
S	0.020	0.024	0.508	0.61
T	0.235	0.255	5.97	6.47
U	0.000	0.050	0.00	1.27
V	0.045	---	1.15	---
Z	---	0.080	---	2.04

STYLE 1:
PIN 1. BASE
2. COLLECTOR
3. EMITTER
4. COLLECTOR

STYLE 2:
PIN 1. BASE
2. EMITTER
3. COLLECTOR
4. EMITTER

STYLE 3:
PIN 1. CATHODE
2. ANODE
3. GATE
4. ANODE

STYLE 4:
PIN 1. MAIN TERMINAL 1
2. MAIN TERMINAL 2
3. GATE
4. MAIN TERMINAL 2

STYLE 5:
PIN 1. GATE
2. DRAIN
3. SOURCE
4. DRAIN

STYLE 6:
PIN 1. ANODE
2. CATHODE
3. ANODE
4. CATHODE

STYLE 7:
PIN 1. CATHODE
2. ANODE
3. CATHODE
4. ANODE

STYLE 8:
PIN 1. CATHODE
2. ANODE
3. EXTERNAL TRIP/DELAY
4. ANODE

STYLE 9:
PIN 1. GATE
2. COLLECTOR
3. EMITTER
4. COLLECTOR

STYLE 10:
PIN 1. GATE
2. SOURCE
3. DRAIN
4. SOURCE

STYLE 11:
PIN 1. DRAIN
2. SOURCE
3. GATE
4. SOURCE

onsemi and onsemi are trademarks of Semiconductor Components Industries, LLC dba **onsemi** or its subsidiaries in the United States and/or other countries. **onsemi** reserves the right to make changes without further notice to any products herein. **onsemi** makes no warranty, representation or guarantee regarding the suitability of its products for any particular purpose, nor does **onsemi** assume any liability arising out of the application or use of any product or circuit, and specifically disclaims any and all liability, including without limitation special, consequential or incidental damages. **onsemi** does not convey any license under its patent rights nor the rights of others.

© Semiconductor Components Industries, LLC, 2006

D²PAK
CASE 936−03
ISSUE E

DATE 29 SEP 2015

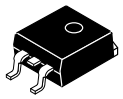

SCALE 1:1

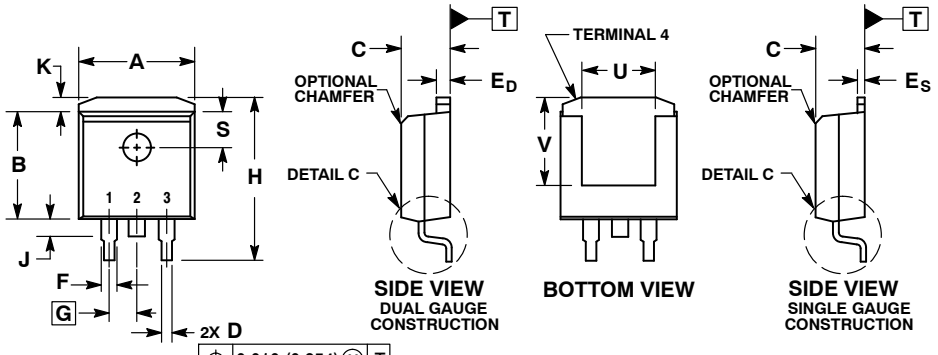

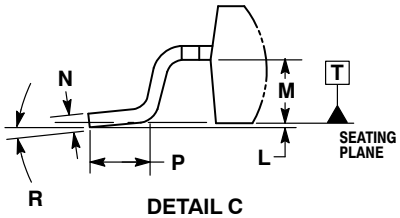

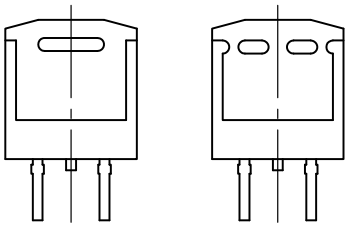

BOTTOM VIEW
OPTIONAL CONSTRUCTIONS

NOTES:
1. DIMENSIONING AND TOLERANCING PER ANSI Y14.5M, 1982.
2. CONTROLLING DIMENSION: INCHES.
3. TAB CONTOUR OPTIONAL WITHIN DIMENSIONS A AND K.
4. DIMENSIONS U AND V ESTABLISH A MINIMUM MOUNTING SURFACE FOR TERMINAL 4.
5. DIMENSIONS A AND B DO NOT INCLUDE MOLD FLASH OR GATE PROTRUSIONS. MOLD FLASH AND GATE PROTRUSIONS NOT TO EXCEED 0.025 (0.635) MAXIMUM.
6. SINGLE GAUGE DESIGN WILL BE SHIPPED AFTER FPCN EXPIRATION IN OCTOBER 2011.

	INCHES		MILLIMETERS	
DIM	MIN	MAX	MIN	MAX
A	0.386	0.403	9.804	10.236
B	0.356	0.368	9.042	9.347
C	0.170	0.180	4.318	4.572
D	0.026	0.036	0.660	0.914
E_D	0.045	0.055	1.143	1.397
E_S	0.018	0.026	0.457	0.660
F	0.051 REF		1.295 REF	
G	0.100 BSC		2.540 BSC	
H	0.539	0.579	13.691	14.707
J	0.125 MAX		3.175 MAX	
K	0.050 REF		1.270 REF	
L	0.000	0.010	0.000	0.254
M	0.088	0.102	2.235	2.591
N	0.018	0.026	0.457	0.660
P	0.058	0.078	1.473	1.981
R	0°	8°	0°	8°
S	0.116 REF		2.946 REF	
U	0.200 MIN		5.080 MIN	
V	0.250 MIN		6.350 MIN	

RECOMMENDED SOLDERING FOOTPRINT*

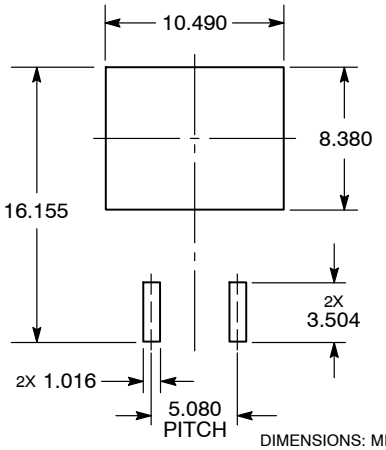

DIMENSIONS: MILLIMETERS

*For additional information on our Pb−Free strategy and soldering details, please download the **onsemi** Soldering and Mounting Techniques Reference Manual, SOLDERRM/D.

GENERIC MARKING DIAGRAM*

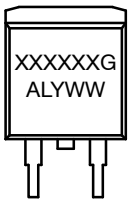

XXXXXX = Specific Device Code
A = Assembly Location
L = Wafer Lot
Y = Year
WW = Work Week
G = Pb−Free Package

*This information is generic. Please refer to device data sheet for actual part marking. Pb−Free indicator, "G" or microdot "▪", may or may not be present. Some products may not follow the Generic Marking.

DOCUMENT NUMBER:	**98ASH01005A**	Electronic versions are uncontrolled except when accessed directly from the Document Repository. Printed versions are uncontrolled except when stamped "CONTROLLED COPY" in red.
DESCRIPTION:	**D²PAK**	**PAGE 1 OF 1**

onsemi and onsemi are trademarks of Semiconductor Components Industries, LLC dba **onsemi** or its subsidiaries in the United States and/or other countries. **onsemi** reserves the right to make changes without further notice to any products herein. **onsemi** makes no warranty, representation or guarantee regarding the suitability of its products for any particular purpose, nor does **onsemi** assume any liability arising out of the application or use of any product or circuit, and specifically disclaims any and all liability, including without limitation special, consequential or incidental damages. **onsemi** does not convey any license under its patent rights nor the rights of others.

© Semiconductor Components Industries, LLC, 2019

onsemi, , and other names, marks, and brands are registered and/or common law trademarks of Semiconductor Components Industries, LLC dba "**onsemi**" or its affiliates and/or subsidiaries in the United States and/or other countries. **onsemi** owns the rights to a number of patents, trademarks, copyrights, trade secrets, and other intellectual property. A listing of **onsemi**'s product/patent coverage may be accessed at www.onsemi.com/site/pdf/Patent−Marking.pdf. **onsemi** reserves the right to make changes at any time to any products or information herein, without notice. The information herein is provided "as−is" and **onsemi** makes no warranty, representation or guarantee regarding the accuracy of the information, product features, availability, functionality, or suitability of its products for any particular purpose, nor does **onsemi** assume any liability arising out of the application or use of any product or circuit, and specifically disclaims any and all liability, including without limitation special, consequential or incidental damages. Buyer is responsible for its products and applications using **onsemi** products, including compliance with all laws, regulations and safety requirements or standards, regardless of any support or applications information provided by **onsemi**. "Typical" parameters which may be provided in **onsemi** data sheets and/or specifications can and do vary in different applications and actual performance may vary over time. All operating parameters, including "Typicals" must be validated for each customer application by customer's technical experts. **onsemi** does not convey any license under any of its intellectual property rights nor the rights of others. **onsemi** products are not designed, intended, or authorized for use as a critical component in life support systems or any FDA Class 3 medical devices or medical devices with a same or similar classification in a foreign jurisdiction or any devices intended for implantation in the human body. Should Buyer purchase or use **onsemi** products for any such unintended or unauthorized application, Buyer shall indemnify and hold **onsemi** and its officers, employees, subsidiaries, affiliates, and distributors harmless against all claims, costs, damages, and expenses, and reasonable attorney fees arising out of, directly or indirectly, any claim of personal injury or death associated with such unintended or unauthorized use, even if such claim alleges that **onsemi** was negligent regarding the design or manufacture of the part. **onsemi** is an Equal Opportunity/Affirmative Action Employer. This literature is subject to all applicable copyright laws and is not for resale in any manner.

ADDITIONAL INFORMATION

TECHNICAL PUBLICATIONS:
Technical Library: www.onsemi.com/design/resources/technical−documentation
onsemi Website: www.onsemi.com

ONLINE SUPPORT: www.onsemi.com/support
For additional information, please contact your local Sales Representative at www.onsemi.com/support/sales