Multicomp

ALL RIGHTS RESERVED. NO PORTION OF THIS PUBLICATION, WHETHER IN WHOLE OR IN PART CAN BE REPRODUCED WITHOUT THE EXPRESS WRITTEN CONSENT OF SPC TECHNOLOGY.

SPC-F005.DWG

REVISIONS

DOC. NO. SPC-F005 * Effective: 7/8/02 * DCP No: 1398

DCP #	REV	DESCRIPTION	DRAWN	DATE	CHECKD	DATE	APPRVD	DATE
1991	A	RELEASED	JN	08-20-09	JWM	08-20-09	JWM	08-20-09

Specifications:

- Power Rating: 1/10 Watt
- Tolerance: 1%
- Max. Working Voltage: 50 V
- Max. Overload Voltage: 100 V
- Temperature Range: −55°C ~ +125°C
- Ambient Temperature: 70°C
- Resistance Range: (See parts tabel)

RoHS Compliant

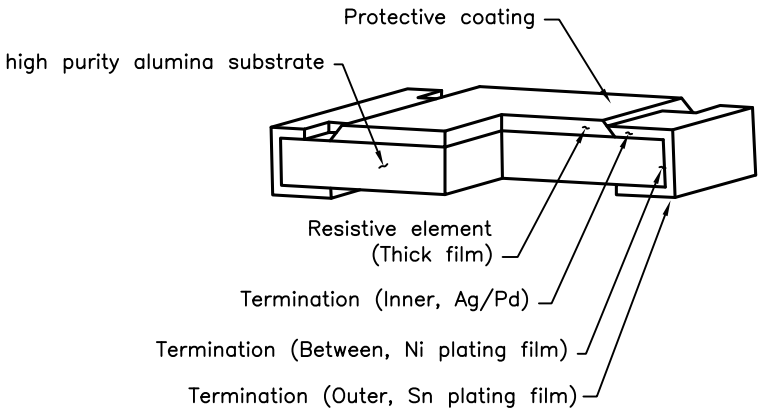

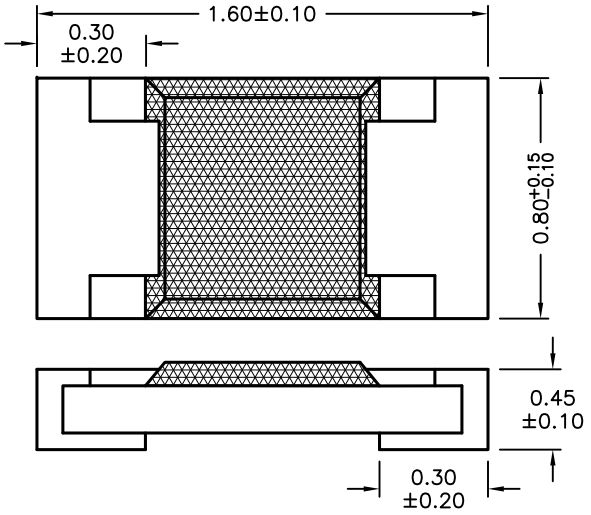

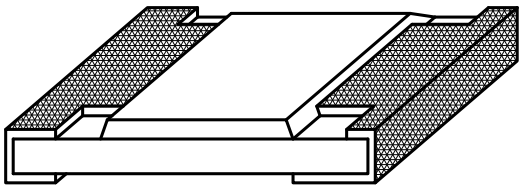

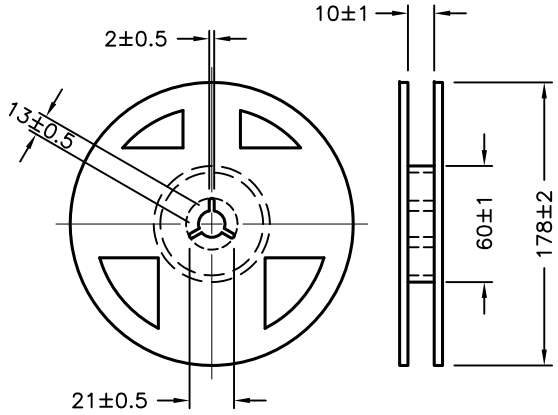

Tape & Reel Dimension

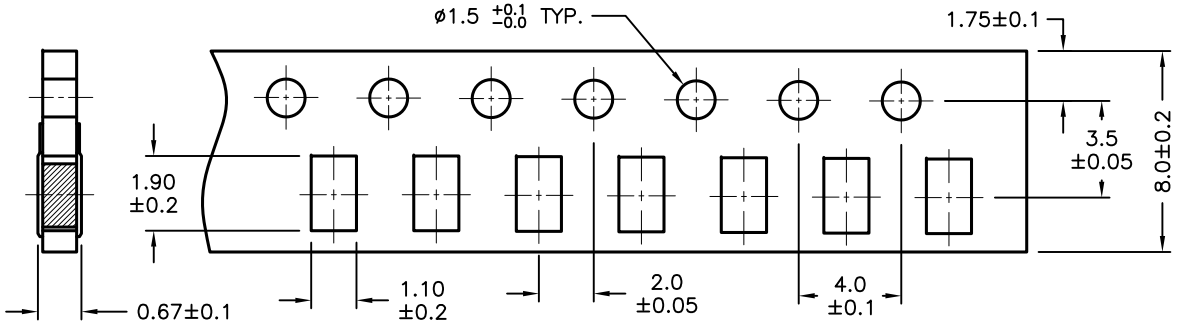

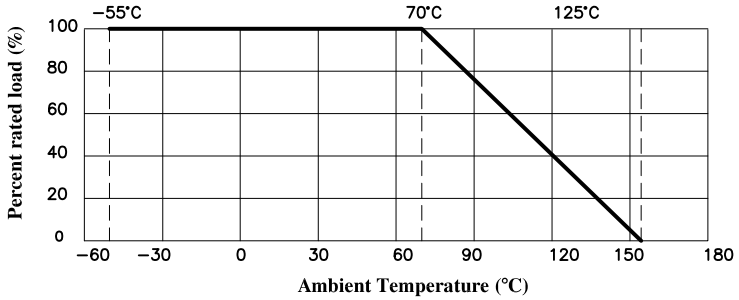

DISCLAIMER:
ALL STATEMENTS AND TECHNICAL INFORMATION CONTAINED HEREIN ARE BASED UPON INFORMATION AND/OR TESTS WE BELIEVE TO BE ACCURATE AND RELIABLE. SINCE CONDITIONS OF USE ARE BEYOND OUR CONTROL, THE USER SHALL DETERMINE THE SUITABILITY OF THE PRODUCT FOR THE INTENDED USE AND ASSUME ALL RISK AND LIABILITY WHATSOEVER IN CONNECTION THEREWITH.

TOLERANCES:

UNLESS OTHERWISE SPECIFIED, DIMENSIONS ARE FOR REFERENCE PURPOSES ONLY.

DRAWN BY:	DATE:
Jason Nash	08-20-09
CHECKED BY:	DATE:
JWM	08-20-09
APPROVED BY:	DATE:
JWM	08-20-09

DRAWING TITLE: **Thick Film Chip Resistors, EIA Size 0603, 1/10 Watt**

SIZE	DWG. NO.	ELECTRONIC FILE	REV
A	Ta-1194	Ta1194.dwg	A

SCALE: NTS | U.O.M.: Millimeters | SHEET: 1 OF 4

Mfg. Part No.	Resistance	Sell UOM
MC0603SAF0000T5E	0ohm	Sold by Each
MC0603SAF0000T5E	0ohm	Sold in Tape and Reel of 5,000
MC0603SAF1021T5E	1.02kohm	Sold by Each
MC0603SAF1021T5E	1.02kohm	Sold in Tape and Reel of 5,000
MC0603SAF1051T5E	1.05kohm	Sold by Each
MC0603SAF1051T5E	1.05kohm	Sold in Tape and Reel of 5,000
MC0603SAF1071T5E	1.07kohm	Sold by Each
MC0603SAF1071T5E	1.07kohm	Sold in Tape and Reel of 5,000
MC0603SAF1131T5E	1.13kohm	Sold by Each
MC0603SAF1131T5E	1.13kohm	Sold in Tape and Reel of 5,000
MC0603SAF1151T5E	1.15kohm	Sold by Each
MC0603SAF1151T5E	1.15kohm	Sold in Tape and Reel of 5,000
MC0603SAF1181T5E	1.18kohm	Sold by Each
MC0603SAF1181T5E	1.18kohm	Sold in Tape and Reel of 5,000
MC0603SAF1211T5E	1.21kohm	Sold by Each
MC0603SAF1211T5E	1.21kohm	Sold in Tape and Reel of 5,000
MC0603SAF1214T5E	1.21Mohm	Sold by Each
MC0603SAF1214T5E	1.21Mohm	Sold in Tape and Reel of 5,000
MC0603SAF1241T5E	1.24kohm	Sold by Each
MC0603SAF1241T5E	1.24kohm	Sold in Tape and Reel of 5,000
MC0603SAF1271T5E	1.27kohm	Sold by Each
MC0603SAF1271T5E	1.27kohm	Sold in Tape and Reel of 5,000
MC0603SAF1204T5E	1.2Mohm	Sold by Each
MC0603SAF1204T5E	1.2Mohm	Sold in Tape and Reel of 5,000
MC0603SAF1331T5E	1.33kohm	Sold by Each
MC0603SAF1331T5E	1.33kohm	Sold in Tape and Reel of 5,000
MC0603SAF1301T5E	1.3kohm	Sold by Each
MC0603SAF1301T5E	1.3kohm	Sold in Tape and Reel of 5,000
MC0603SAF1431T5E	1.43kohm	Sold by Each
MC0603SAF1431T5E	1.43kohm	Sold in Tape and Reel of 5,000
MC0603SAF1401T5E	1.4kohm	Sold by Each
MC0603SAF1401T5E	1.4kohm	Sold in Tape and Reel of 5,000
MC0603SAF1541T5E	1.54kohm	Sold by Each
MC0603SAF1541T5E	1.54kohm	Sold in Tape and Reel of 5,000
MC0603SAF1501T5E	1.5kohm	Sold by Each
MC0603SAF1501T5E	1.5kohm	Sold in Tape and Reel of 5,000
MC0603SAF1504T5E	1.5Mohm	Sold by Each
MC0603SAF1504T5E	1.5Mohm	Sold in Tape and Reel of 5,000
MC0603SAF1621T5E	1.62kohm	Sold by Each
MC0603SAF1621T5E	1.62kohm	Sold in Tape and Reel of 5,000
MC0603SAF1651T5E	1.65kohm	Sold by Each
MC0603SAF1651T5E	1.65kohm	Sold in Tape and Reel of 5,000
MC0603SAF1691T5E	1.69kohm	Sold by Each
MC0603SAF1691T5E	1.69kohm	Sold in Tape and Reel of 5,000
MC0603SAF1601T5E	1.6kohm	Sold by Each
MC0603SAF1601T5E	1.6kohm	Sold in Tape and Reel of 5,000
MC0603SAF1741T5E	1.74kohm	Sold by Each
MC0603SAF1741T5E	1.74kohm	Sold in Tape and Reel of 5,000
MC0603SAF1781T5E	1.78kohm	Sold by Each
MC0603SAF1781T5E	1.78kohm	Sold in Tape and Reel of 5,000
MC0603SAF1821T5E	1.82kohm	Sold by Each
MC0603SAF1821T5E	1.82kohm	Sold in Tape and Reel of 5,000
MC0603SAF1871T5E	1.87kohm	Sold by Each
MC0603SAF1871T5E	1.87kohm	Sold in Tape and Reel of 5,000
MC0603SAF1801T5E	1.8kohm	Sold by Each
MC0603SAF1801T5E	1.8kohm	Sold In Tape and Reel of 5,000
MC0603SAF1911T5E	1.91kohm	Sold by Each
MC0603SAF1911T5E	1.91kohm	Sold in Tape and Reel of 5,000
MC0603SAF1961T5E	1.96kohm	Sold by Each
MC0603SAF1961T5E	1.96kohm	Sold in Tape and Reel of 5,000
MC0603SAF1022T5E	10.2kohm	Sold by Each
MC0603SAF1022T5E	10.2kohm	Sold in Tape and Reel of 5,000

Mfg. Part No.	Resistance	Sell UOM
MC0603SAF1183T5E	118kohm	Sold in Tape and Reel of 5,000
MC0603SAF1180T5E	118ohm	Sold by Each
MC0603SAF1180T5E	118ohm	Sold in Tape and Reel of 5,000
MC0603SAF110JT5E	11ohm	Sold by Each
MC0603SAF110JT5E	11ohm	Sold in Tape and Reel of 5,000
MC0603SAF1212T5E	12.1kohm	Sold by Each
MC0603SAF1212T5E	12.1kohm	Sold in Tape and Reel of 5,000
MC0603SAF121JT5E	12.1ohm	Sold by Each
MC0603SAF121JT5E	12.1ohm	Sold in Tape and Reel of 5,000
MC0603SAF1242T5E	12.4kohm	Sold by Each
MC0603SAF1242T5E	12.4kohm	Sold in Tape and Reel of 5,000
MC0603SAF124JT5E	12.4ohm	Sold by Each
MC0603SAF124JT5E	12.4ohm	Sold in Tape and Reel of 5,000
MC0603SAF1272T5E	12.7kohm	Sold by Each
MC0603SAF1272T5E	12.7kohm	Sold in Tape and Reel of 5,000
MC0603SAF127JT5E	12.7ohm	Sold by Each
MC0603SAF127JT5E	12.7ohm	Sold in Tape and Reel of 5,000
MC0603SAF1200T5E	120ohm	Sold by Each
MC0603SAF1200T5E	120ohm	Sold in Tape and Reel of 5,000
MC0603SAF1213T5E	121kohm	Sold by Each
MC0603SAF1213T5E	121kohm	Sold in Tape and Reel of 5,000
MC0603SAF1210T5E	121ohm	Sold by Each
MC0603SAF1210T5E	121ohm	Sold in Tape and Reel of 5,000
MC0603SAF1243T5E	124kohm	Sold by Each
MC0603SAF1243T5E	124kohm	Sold in Tape and Reel of 5,000
MC0603SAF1273T5E	127kohm	Sold by Each
MC0603SAF1273T5E	127kohm	Sold in Tape and Reel of 5,000
MC0603SAF1202T5E	12kohm	Sold by Each
MC0603SAF1202T5E	12kohm	Sold in Tape and Reel of 5,000
MC0603SAF120JT5E	12ohm	Sold by Each
MC0603SAF120JT5E	12ohm	Sold in Tape and Reel of 5,000
MC0603SAF1332T5E	13.3kohm	Sold by Each
MC0603SAF1332T5E	13.3kohm	Sold in Tape and Reel of 5,000
MC0603SAF133JT5E	13.3ohm	Sold by Each
MC0603SAF133JT5E	13.3ohm	Sold in Tape and Reel of 5,000
MC0603SAF137JT5E	13.7ohm	Sold by Each
MC0603SAF137JT5E	13.7ohm	Sold in Tape and Reel of 5,000
MC0603SAF1303T5E	130kohm	Sold by Each
MC0603SAF1303T5E	130kohm	Sold in Tape and Reel of 5,000
MC0603SAF1333T5E	133kohm	Sold by Each
MC0603SAF1333T5E	133kohm	Sold in Tape and Reel of 5,000
MC0603SAF1373T5E	137kohm	Sold by Each
MC0603SAF1373T5E	137kohm	Sold in Tape and Reel of 5,000
MC0603SAF1302T5E	13kohm	Sold by Each
MC0603SAF1302T5E	13kohm	Sold in Tape and Reel of 5,000
MC0603SAF130JT5E	13ohm	Sold by Each
MC0603SAF130JT5E	13ohm	Sold in Tape and Reel of 5,000
MC0603SAF1432T5E	14.3kohm	Sold by Each
MC0603SAF1432T5E	14.3kohm	Sold in Tape and Reel of 5,000
MC0603SAF143JT5E	14.3ohm	Sold by Each
MC0603SAF143JT5E	14.3ohm	Sold in Tape and Reel of 5,000
MC0603SAF1472T5E	14.7kohm	Sold by Each
MC0603SAF1472T5E	14.7kohm	Sold in Tape and Reel of 5,000
MC0603SAF147JT5E	14.7ohm	Sold by Each
MC0603SAF147JT5E	14.7ohm	Sold in Tape and Reel of 5,000
MC0603SAF1403T5E	140kohm	Sold by Each
MC0603SAF1403T5E	140kohm	Sold in Tape and Reel of 5,000
MC0603SAF1400T5E	140ohm	Sold by Each
MC0603SAF1400T5E	140ohm	Sold in Tape and Reel of 5,000
MC0603SAF1430T5E	143ohm	Sold by Each
MC0603SAF1430T5E	143ohm	Sold in Tape and Reel of 5,000
MC0603SAF1473T5E	147kohm	Sold by Each

Mfg. Part No.	Resistance	Sell UOM
MC0603SAF1653T5E	165kohm	Sold by Each
MC0603SAF1653T5E	165kohm	Sold in Tape and Reel of 5,000
MC0603SAF1693T5E	169kohm	Sold by Each
MC0603SAF1693T5E	169kohm	Sold in Tape and Reel of 5,000
MC0603SAF1690T5E	169ohm	Sold by Each
MC0603SAF1690T5E	169ohm	Sold in Tape and Reel of 5,000
MC0603SAF1602T5E	16kohm	Sold by Each
MC0603SAF1602T5E	16kohm	Sold in Tape and Reel of 5,000
MC0603SAF160JT5E	16ohm	Sold by Each
MC0603SAF160JT5E	16ohm	Sold in Tape and Reel of 5,000
MC0603SAF174JT5E	17.4ohm	Sold by Each
MC0603SAF174JT5E	17.4ohm	Sold in Tape and Reel of 5,000
MC0603SAF1782T5E	17.8kohm	Sold by Each
MC0603SAF1782T5E	17.8kohm	Sold in Tape and Reel of 5,000
MC0603SAF178JT5E	17.8ohm	Sold by Each
MC0603SAF178JT5E	17.8ohm	Sold in Tape and Reel of 5,000
MC0603SAF1743T5E	174kohm	Sold by Each
MC0603SAF1743T5E	174kohm	Sold in Tape and Reel of 5,000
MC0603SAF1783T5E	178kohm	Sold by Each
MC0603SAF1783T5E	178kohm	Sold in Tape and Reel of 5,000
MC0603SAF1822T5E	18.2kohm	Sold by Each
MC0603SAF1822T5E	18.2kohm	Sold in Tape and Reel of 5,000
MC0603SAF182JT5E	18.2ohm	Sold by Each
MC0603SAF182JT5E	18.2ohm	Sold in Tape and Reel of 5,000
MC0603SAF1872T5E	18.7kohm	Sold by Each
MC0603SAF1872T5E	18.7kohm	Sold in Tape and Reel of 5,000
MC0603SAF187JT5E	18.7ohm	Sold by Each
MC0603SAF187JT5E	18.7ohm	Sold in Tape and Reel of 5,000
MC0603SAF1803T5E	180kohm	Sold by Each
MC0603SAF1803T5E	180kohm	Sold in Tape and Reel of 5,000
MC0603SAF1823T5E	182kohm	Sold by Each
MC0603SAF1823T5E	182kohm	Sold in Tape and Reel of 5,000
MC0603SAF1820T5E	182ohm	Sold by Each
MC0603SAF1820T5E	182ohm	Sold in Tape and Reel of 5,000
MC0603SAF1873T5E	187kohm	Sold by Each
MC0603SAF1873T5E	187kohm	Sold in Tape and Reel of 5,000
MC0603SAF1802T5E	18kohm	Sold by Each
MC0603SAF1802T5E	18kohm	Sold in Tape and Reel of 5,000
MC0603SAF180JT5E	18ohm	Sold by Each
MC0603SAF180JT5E	18ohm	Sold in Tape and Reel of 5,000
MC0603SAF1912T5E	19.1kohm	Sold by Each
MC0603SAF1912T5E	19.1kohm	Sold in Tape and Reel of 5,000
MC0603SAF191JT5E	19.1ohm	Sold by Each
MC0603SAF191JT5E	19.1ohm	Sold in Tape and Reel of 5,000
MC0603SAF1962T5E	19.6kohm	Sold by Each
MC0603SAF1962T5E	19.6kohm	Sold in Tape and Reel of 5,000
MC0603SAF196JT5E	19.6ohm	Sold by Each
MC0603SAF196JT5E	19.6ohm	Sold in Tape and Reel of 5,000
MC0603SAF1913T5E	191kohm	Sold by Each
MC0603SAF1913T5E	191kohm	Sold in Tape and Reel of 5,000
MC0603SAF1910T5E	191ohm	Sold by Each
MC0603SAF1910T5E	191ohm	Sold in Tape and Reel of 5,000
MC0603SAF1963T5E	196kohm	Sold by Each
MC0603SAF1963T5E	196kohm	Sold in Tape and Reel of 5,000
MC0603SAF1001T5E	1kohm	Sold by Each
MC0603SAF1001T5E	1kohm	Sold In Tape and Reel of 5,000
MC0603SAF1004T5E	1Mohm	Sold by Each
MC0603SAF1004T5E	1Mohm	Sold in Tape and Reel of 5,000
MC0603SAF2051T5E	2.05kohm	Sold by Each
MC0603SAF2051T5E	2.05kohm	Sold in Tape and Reel of 5,000
MC0603SAF2151T5E	2.15kohm	Sold by Each
MC0603SAF2151T5E	2.15kohm	Sold in Tape and Reel of 5,000

ALL RIGHTS RESERVED. NO PORTION OF THIS PUBLICATION, WHETHER IN WHOLE OR IN PART CAN BE REPRODUCED WITHOUT THE EXPRESS WRITTEN CONSENT OF SPC TECHNOLOGY.

SIZE	DWG. NO.	ELECTRONIC FILE	REV
A	Ta-1194	Ta-1194.dwg	A

Mfg. Part No.	Resistance	Sell UOM
MC0603SAF2002T5E	20kohm	Sold in Tape and Reel of 5,000
MC0603SAF200JT5E	20ohm	Sold by Each
MC0603SAF200JT5E	20ohm	Sold in Tape and Reel of 5,000
MC0603SAF2152T5E	21.5kohm	Sold by Each
MC0603SAF2152T5E	21.5kohm	Sold in Tape and Reel of 5,000
MC0603SAF215JT5E	21.5ohm	Sold by Each
MC0603SAF215JT5E	21.5ohm	Sold in Tape and Reel of 5,000
MC0603SAF2103T5E	210kohm	Sold by Each
MC0603SAF2103T5E	210kohm	Sold in Tape and Reel of 5,000
MC0603SAF2153T5E	215kohm	Sold by Each
MC0603SAF2153T5E	215kohm	Sold in Tape and Reel of 5,000
MC0603SAF2102T5E	21kohm	Sold by Each
MC0603SAF2102T5E	21kohm	Sold in Tape and Reel of 5,000
MC0603SAF210JT5E	21ohm	Sold by Each
MC0603SAF210JT5E	21ohm	Sold in Tape and Reel of 5,000
MC0603SAF2212T5E	22.1kohm	Sold by Each
MC0603SAF2212T5E	22.1kohm	Sold in Tape and Reel of 5,000
MC0603SAF221JT5E	22.1ohm	Sold by Each
MC0603SAF221JT5E	22.1ohm	Sold in Tape and Reel of 5,000
MC0603SAF2262T5E	22.6kohm	Sold by Each
MC0603SAF2262T5E	22.6kohm	Sold in Tape and Reel of 5,000
MC0603SAF226JT5E	22.6ohm	Sold by Each
MC0603SAF226JT5E	22.6ohm	Sold in Tape and Reel of 5,000
MC0603SAF2203T5E	220kohm	Sold by Each
MC0603SAF2203T5E	220kohm	Sold in Tape and Reel of 5,000
MC0603SAF2200T5E	220ohm	Sold by Each
MC0603SAF2200T5E	220ohm	Sold In Tape and Reel of 5,000
MC0603SAF2213T5E	221kohm	Sold by Each
MC0603SAF2213T5E	221kohm	Sold in Tape and Reel of 5,000
MC0603SAF2210T5E	221ohm	Sold by Each
MC0603SAF2210T5E	221ohm	Sold in Tape and Reel of 5,000
MC0603SAF2263T5E	226kohm	Sold by Each
MC0603SAF2263T5E	226kohm	Sold in Tape and Reel of 5,000
MC0603SAF2202T5E	22kohm	Sold by Each
MC0603SAF2202T5E	22kohm	Sold in Tape and Reel of 5,000
MC0603SAF220JT5E	22ohm	Sold by Each
MC0603SAF220JT5E	22ohm	Sold in Tape and Reel of 5,000
MC0603SAF2322T5E	23.2kohm	Sold by Each
MC0603SAF2322T5E	23.2kohm	Sold in Tape and Reel of 5,000
MC0603SAF232JT5E	23.2ohm	Sold by Each
MC0603SAF232JT5E	23.2ohm	Sold in Tape and Reel of 5,000
MC0603SAF2372T5E	23.7kohm	Sold by Each
MC0603SAF2372T5E	23.7kohm	Sold in Tape and Reel of 5,000
MC0603SAF2323T5E	232kohm	Sold by Each
MC0603SAF2323T5E	232kohm	Sold in Tape and Reel of 5,000
MC0603SAF2373T5E	237kohm	Sold by Each
MC0603SAF2373T5E	237kohm	Sold in Tape and Reel of 5,000
MC0603SAF2370T5E	237ohm	Sold by Each
MC0603SAF2370T5E	237ohm	Sold in Tape and Reel of 5,000
MC0603SAF2432T5E	24.3kohm	Sold by Each
MC0603SAF2432T5E	24.3kohm	Sold in Tape and Reel of 5,000
MC0603SAF243JT5E	24.3ohm	Sold by Each
MC0603SAF243JT5E	24.3ohm	Sold in Tape and Reel of 5,000
MC0603SAF2492T5E	24.9kohm	Sold by Each
MC0603SAF2492T5E	24.9kohm	Sold in Tape and Reel of 5,000
MC0603SAF249JT5E	24.9ohm	Sold by Each
MC0603SAF249JT5E	24.9ohm	Sold in Tape and Reel of 5,000
MC0603SAF2403T5E	240kohm	Sold by Each
MC0603SAF2403T5E	240kohm	Sold in Tape and Reel of 5,000
MC0603SAF2400T5E	240ohm	Sold by Each
MC0603SAF2400T5E	240ohm	Sold in Tape and Reel of 5,000
MC0603SAF2433T5E	243kohm	Sold by Each

Mfg. Part No.	Resistance	Sell UOM
MC0603SAF2873T5E	287kohm	Sold by Each
MC0603SAF2873T5E	287kohm	Sold in Tape and Reel of 5,000
MC0603SAF2802T5E	28kohm	Sold by Each
MC0603SAF2802T5E	28kohm	Sold in Tape and Reel of 5,000
MC0603SAF280JT5E	28ohm	Sold by Each
MC0603SAF280JT5E	28ohm	Sold in Tape and Reel of 5,000
MC0603SAF294JT5E	29.4ohm	Sold by Each
MC0603SAF294JT5E	29.4ohm	Sold in Tape and Reel of 5,000
MC0603SAF2943T5E	294kohm	Sold by Each
MC0603SAF2943T5E	294kohm	Sold in Tape and Reel of 5,000
MC0603SAF2001T5E	2kohm	Sold by Each
MC0603SAF2001T5E	2kohm	Sold in Tape and Reel of 5,000
MC0603SAF3011T5E	3.01kohm	Sold by Each
MC0603SAF3011T5E	3.01kohm	Sold in Tape and Reel of 5,000
MC0603SAF3091T5E	3.09kohm	Sold by Each
MC0603SAF3091T5E	3.09kohm	Sold in Tape and Reel of 5,000
MC0603SAF3161T5E	3.16kohm	Sold by Each
MC0603SAF3161T5E	3.16kohm	Sold In Tape and Reel of 5,000
MC0603SAF3101T5E	3.1kohm	Sold by Each
MC0603SAF3101T5E	3.1kohm	Sold in Tape and Reel of 5,000
MC0603SAF3241T5E	3.24kohm	Sold by Each
MC0603SAF3241T5E	3.24kohm	Sold in Tape and Reel of 5,000
MC0603SAF3321T5E	3.32kohm	Sold by Each
MC0603SAF3321T5E	3.32kohm	Sold in Tape and Reel of 5,000
MC0603SAF3301T5E	3.3kohm	Sold by Each
MC0603SAF3301T5E	3.3kohm	Sold in Tape and Reel of 5,000
MC0603SAF3481T5E	3.48kohm	Sold by Each
MC0603SAF3481T5E	3.48kohm	Sold in Tape and Reel of 5,000
MC0603SAF3401T5E	3.4kohm	Sold by Each
MC0603SAF3401T5E	3.4kohm	Sold in Tape and Reel of 5,000
MC0603SAF3571T5E	3.57kohm	Sold by Each
MC0603SAF3571T5E	3.57kohm	Sold in Tape and Reel of 5,000
MC0603SAF3651T5E	3.65kohm	Sold by Each
MC0603SAF3651T5E	3.65kohm	Sold In Tape and Reel of 5,000
MC0603SAF3601T5E	3.6kohm	Sold by Each
MC0603SAF3601T5E	3.6kohm	Sold in Tape and Reel of 5,000
MC0603SAF3741T5E	3.74kohm	Sold by Each
MC0603SAF3741T5E	3.74kohm	Sold in Tape and Reel of 5,000
MC0603SAF3921T5E	3.92kohm	Sold by Each
MC0603SAF3921T5E	3.92kohm	Sold in Tape and Reel of 5,000
MC0603SAF3901T5E	3.9kohm	Sold by Each
MC0603SAF3901T5E	3.9kohm	Sold in Tape and Reel of 5,000
MC0603SAF3012T5E	30.1kohm	Sold by Each
MC0603SAF3012T5E	30.1kohm	Sold in Tape and Reel of 5,000
MC0603SAF301JT5E	30.1ohm	Sold by Each
MC0603SAF301JT5E	30.1ohm	Sold in Tape and Reel of 5,000
MC0603SAF3092T5E	30.9kohm	Sold by Each
MC0603SAF3092T5E	30.9kohm	Sold in Tape and Reel of 5,000
MC0603SAF309JT5E	30.9ohm	Sold by Each
MC0603SAF309JT5E	30.9ohm	Sold in Tape and Reel of 5,000
MC0603SAF3003T5E	300kohm	Sold by Each
MC0603SAF3003T5E	300kohm	Sold in Tape and Reel of 5,000
MC0603SAF3000T5E	300ohm	Sold by Each
MC0603SAF3000T5E	300ohm	Sold in Tape and Reel of 5,000
MC0603SAF3013T5E	301kohm	Sold by Each
MC0603SAF3013T5E	301kohm	Sold in Tape and Reel of 5,000
MC0603SAF3010T5E	301ohm	Sold by Each
MC0603SAF3010T5E	301ohm	Sold in Tape and Reel of 5,000
MC0603SAF3093T5E	309kohm	Sold by Each
MC0603SAF3093T5E	309kohm	Sold in Tape and Reel of 5,000
MC0603SAF3002T5E	30kohm	Sold by Each
MC0603SAF3002T5E	30kohm	Sold in Tape and Reel of 5,000

Mfg. Part No.	Resistance	Sell UOM
MC0603SAF3652T5E	36.5kohm	Sold in Tape and Reel of 5,000
MC0603SAF365JT5E	36.5ohm	Sold by Each
MC0603SAF365JT5E	36.5ohm	Sold in Tape and Reel of 5,000
MC0603SAF3603T5E	360kohm	Sold by Each
MC0603SAF3603T5E	360kohm	Sold in Tape and Reel of 5,000
MC0603SAF3600T5E	360ohm	Sold by Each
MC0603SAF3600T5E	360ohm	Sold in Tape and Reel of 5,000
MC0603SAF360JT5E	36ohm	Sold by Each
MC0603SAF360JT5E	36ohm	Sold in Tape and Reel of 5,000
MC0603SAF3742T5E	37.4kohm	Sold by Each
MC0603SAF3742T5E	37.4kohm	Sold In Tape and Reel of 5,000
MC0603SAF374JT5E	37.4ohm	Sold by Each
MC0603SAF374JT5E	37.4ohm	Sold in Tape and Reel of 5,000
MC0603SAF3743T5E	374kohm	Sold by Each
MC0603SAF3743T5E	374kohm	Sold in Tape and Reel of 5,000
MC0603SAF3832T5E	38.3kohm	Sold by Each
MC0603SAF3832T5E	38.3kohm	Sold in Tape and Reel of 5,000
MC0603SAF383JT5E	38.3ohm	Sold by Each
MC0603SAF383JT5E	38.3ohm	Sold in Tape and Reel of 5,000
MC0603SAF3833T5E	383kohm	Sold by Each
MC0603SAF3833T5E	383kohm	Sold in Tape and Reel of 5,000
MC0603SAF3830T5E	383ohm	Sold by Each
MC0603SAF3830T5E	383ohm	Sold in Tape and Reel of 5,000
MC0603SAF3922T5E	39.2kohm	Sold by Each
MC0603SAF3922T5E	39.2kohm	Sold in Tape and Reel of 5,000
MC0603SAF392JT5E	39.2ohm	Sold by Each
MC0603SAF392JT5E	39.2ohm	Sold in Tape and Reel of 5,000
MC0603SAF3923T5E	392kohm	Sold by Each
MC0603SAF3923T5E	392kohm	Sold in Tape and Reel of 5,000
MC0603SAF3902T5E	39kohm	Sold by Each
MC0603SAF3902T5E	39kohm	Sold in Tape and Reel of 5,000
MC0603SAF390JT5E	39ohm	Sold by Each
MC0603SAF390JT5E	39ohm	Sold in Tape and Reel of 5,000
MC0603SAF3001T5E	3kohm	Sold by Each
MC0603SAF3001T5E	3kohm	Sold in Tape and Reel of 5,000
MC0603SAF4021T5E	4.02kohm	Sold by Each
MC0603SAF4021T5E	4.02kohm	Sold in Tape and Reel of 5,000
MC0603SAF4121T5E	4.12kohm	Sold by Each
MC0603SAF4121T5E	4.12kohm	Sold in Tape and Reel of 5,000
MC0603SAF4221T5E	4.22kohm	Sold by Each
MC0603SAF4221T5E	4.22kohm	Sold in Tape and Reel of 5,000
MC0603SAF4321T5E	4.32kohm	Sold by Each
MC0603SAF4321T5E	4.32kohm	Sold in Tape and Reel of 5,000
MC0603SAF4531T5E	4.53kohm	Sold by Each
MC0603SAF4531T5E	4.53kohm	Sold in Tape and Reel of 5,000
MC0603SAF4541T5E	4.54kohm	Sold by Each
MC0603SAF4541T5E	4.54kohm	Sold in Tape and Reel of 5,000
MC0603SAF4751T5E	4.75kohm	Sold by Each
MC0603SAF4751T5E	4.75kohm	Sold in Tape and Reel of 5,000
MC0603SAF4754T5E	4.75Mohm	Sold by Each
MC0603SAF4754T5E	4.75Mohm	Sold in Tape and Reel of 5,000
MC0603SAF475KT5E	4.75ohm	Sold in Tape and Reel of 5,000
MC0603SAF4701T5E	4.7kohm	Sold by Each
MC0603SAF4701T5E	4.7kohm	Sold in Tape and Reel of 5,000
MC0603SAF4871T5E	4.87kohm	Sold by Each
MC0603SAF4871T5E	4.87kohm	Sold in Tape and Reel of 5,000
MC0603SAF4991T5E	4.99kohm	Sold by Each
MC0603SAF4991T5E	4.99kohm	Sold in Tape and Reel of 5,000
MC0603SAF4022T5E	40.2kohm	Sold by Each
MC0603SAF4022T5E	40.2kohm	Sold in Tape and Reel of 5,000
MC0603SAF4023T5E	402kohm	Sold by Each
MC0603SAF4023T5E	402kohm	Sold in Tape and Reel of 5,000

ALL RIGHTS RESERVED. NO PORTION OF THIS PUBLICATION, WHETHER IN WHOLE OR IN PART CAN BE REPRODUCED WITHOUT THE EXPRESS WRITTEN CONSENT OF SPC TECHNOLOGY.

SIZE	DWG. NO.	ELECTRONIC FILE	REV
A	Ta-1194	Ta-1194.dwg	A

Mfg. Part No.	Resistance	Sell UOM
MC0603SAF4702T5E	47kohm	Sold by Each
MC0603SAF4702T5E	47kohm	Sold in Tape and Reel of 5,000
MC0603SAF470JT5E	47ohm	Sold by Each
MC0603SAF470JT5E	47ohm	Sold in Tape and Reel of 5,000
MC0603SAF487JT5E	48.7ohm	Sold by Each
MC0603SAF487JT5E	48.7ohm	Sold in Tape and Reel of 5,000
MC0603SAF4873T5E	487kohm	Sold by Each
MC0603SAF4873T5E	487kohm	Sold in Tape and Reel of 5,000
MC0603SAF4992T5E	49.9kohm	Sold by Each
MC0603SAF4992T5E	49.9kohm	Sold in Tape and Reel of 5,000
MC0603SAF499JT5E	49.9ohm	Sold by Each
MC0603SAF499JT5E	49.9ohm	Sold in Tape and Reel of 5,000
MC0603SAF4993T5E	499kohm	Sold by Each
MC0603SAF4993T5E	499kohm	Sold in Tape and Reel of 5,000
MC0603SAF4990T5E	499ohm	Sold by Each
MC0603SAF4990T5E	499ohm	Sold in Tape and Reel of 5,000
MC0603SAF5111T5E	5.11kohm	Sold by Each
MC0603SAF5111T5E	5.11kohm	Sold in Tape and Reel of 5,000
MC0603SAF5101T5E	5.1kohm	Sold by Each
MC0603SAF5101T5E	5.1kohm	Sold in Tape and Reel of 5,000
MC0603SAF5231T5E	5.23kohm	Sold by Each
MC0603SAF5231T5E	5.23kohm	Sold in Tape and Reel of 5,000
MC0603SAF5361T5E	5.36kohm	Sold by Each
MC0603SAF5361T5E	5.36kohm	Sold in Tape and Reel of 5,000
MC0603SAF5491T5E	5.49kohm	Sold by Each
MC0603SAF5491T5E	5.49kohm	Sold in Tape and Reel of 5,000
MC0603SAF5601T5E	5.6kohm	Sold by Each
MC0603SAF5601T5E	5.6kohm	Sold in Tape and Reel of 5,000
MC0603SAF5761T5E	5.76kohm	Sold by Each
MC0603SAF5761T5E	5.76kohm	Sold in Tape and Reel of 5,000
MC0603SAF5901T5E	5.9kohm	Sold by Each
MC0603SAF5901T5E	5.9kohm	Sold in Tape and Reel of 5,000
MC0603SAF5112T5E	51.1kohm	Sold by Each
MC0603SAF5112T5E	51.1kohm	Sold in Tape and Reel of 5,000
MC0603SAF511JT5E	51.1ohm	Sold by Each
MC0603SAF511JT5E	51.1ohm	Sold in Tape and Reel of 5,000
MC0603SAF5103T5E	510kohm	Sold by Each
MC0603SAF5103T5E	510kohm	Sold in Tape and Reel of 5,000
MC0603SAF5110T5E	511ohm	Sold by Each
MC0603SAF5110T5E	511ohm	Sold in Tape and Reel of 5,000
MC0603SAF5102T5E	51kohm	Sold by Each
MC0603SAF5102T5E	51kohm	Sold in Tape and Reel of 5,000
MC0603SAF5232T5E	52.3kohm	Sold by Each
MC0603SAF5232T5E	52.3kohm	Sold in Tape and Reel of 5,000
MC0603SAF5230T5E	523ohm	Sold by Each
MC0603SAF5230T5E	523ohm	Sold in Tape and Reel of 5,000
MC0603SAF5360T5E	536ohm	Sold by Each
MC0603SAF5360T5E	536ohm	Sold in Tape and Reel of 5,000
MC0603SAF5492T5E	54.9kohm	Sold by Each
MC0603SAF5492T5E	54.9kohm	Sold in Tape and Reel of 5,000
MC0603SAF5622T5E	56.2kohm	Sold by Each
MC0603SAF5622T5E	56.2kohm	Sold In Tape and Reel of 5,000
MC0603SAF5603T5E	560kohm	Sold by Each
MC0603SAF5603T5E	560kohm	Sold in Tape and Reel of 5,000
MC0603SAF5623T5E	562kohm	Sold by Each
MC0603SAF5623T5E	562kohm	Sold in Tape and Reel of 5,000
MC0603SAF5903T5E	590kohm	Sold by Each
MC0603SAF5903T5E	590kohm	Sold in Tape and Reel of 5,000
MC0603SAF5902T5E	59kohm	Sold by Each
MC0603SAF5902T5E	59kohm	Sold in Tape and Reel of 5,000
MC0603SAF6041T5E	6.04kohm	Sold by Each
MC0603SAF6041T5E	6.04kohm	Sold in Tape and Reel of 5,000

Mfg. Part No.	Resistance	Sell UOM
MC0603SAF6983T5E	698kohm	Sold in Tape and Reel of 5,000
MC0603SAF7151T5E	7.15kohm	Sold by Each
MC0603SAF7151T5E	7.15kohm	Sold in Tape and Reel of 5,000
MC0603SAF7321T5E	7.32kohm	Sold by Each
MC0603SAF7321T5E	7.32kohm	Sold in Tape and Reel of 5,000
MC0603SAF7501T5E	7.5kohm	Sold by Each
MC0603SAF7501T5E	7.5kohm	Sold in Tape and Reel of 5,000
MC0603SAF7681T5E	7.68kohm	Sold by Each
MC0603SAF7681T5E	7.68kohm	Sold in Tape and Reel of 5,000
MC0603SAF7871T5E	7.87kohm	Sold by Each
MC0603SAF7871T5E	7.87kohm	Sold in Tape and Reel of 5,000
MC0603SAF7152T5E	71.5kohm	Sold by Each
MC0603SAF7152T5E	71.5kohm	Sold in Tape and Reel of 5,000
MC0603SAF7153T5E	715kohm	Sold by Each
MC0603SAF7153T5E	715kohm	Sold in Tape and Reel of 5,000
MC0603SAF7503T5E	750kohm	Sold by Each
MC0603SAF7503T5E	750kohm	Sold in Tape and Reel of 5,000
MC0603SAF7502T5E	75kohm	Sold by Each
MC0603SAF7502T5E	75kohm	Sold in Tape and Reel of 5,000
MC0603SAF7682T5E	76.8kohm	Sold by Each
MC0603SAF7682T5E	76.8kohm	Sold In Tape and Reel of 5,000
MC0603SAF68JT5E	76.8ohm	Sold in Tape and Reel of 5,000
MC0603SAF768JT5E	76.8ohm	Sold by Each
MC0603SAF7680T5E	768ohm	Sold by Each
MC0603SAF7680T5E	768ohm	Sold in Tape and Reel of 5,000
MC0603SAF7870T5E	787ohm	Sold by Each
MC0603SAF7870T5E	787ohm	Sold in Tape and Reel of 5,000
MC0603SAF8061T5E	8.06kohm	Sold by Each
MC0603SAF8061T5E	8.06kohm	Sold in Tape and Reel of 5,000
MC0603SAF8251T5E	8.25kohm	Sold by Each
MC0603SAF8251T5E	8.25kohm	Sold in Tape and Reel of 5,000
MC0603SAF8201T5E	8.2kohm	Sold by Each
MC0603SAF8201T5E	8.2kohm	Sold In Tape and Reel of 5,000
MC0603SAF8451T5E	8.45kohm	Sold by Each
MC0603SAF8451T5E	8.45kohm	Sold in Tape and Reel of 5,000
MC0603SAF8661T5E	8.66kohm	Sold by Each
MC0603SAF8661T5E	8.66kohm	Sold in Tape and Reel of 5,000
MC0603SAF8062T5E	80.6kohm	Sold by Each
MC0603SAF8062T5E	80.6kohm	Sold in Tape and Reel of 5,000
MC0603SAF806JT5E	80.6ohm	Sold by Each
MC0603SAF806JT5E	80.6ohm	Sold in Tape and Reel of 5,000
MC0603SAF8063T5E	806kohm	Sold by Each
MC0603SAF8063T5E	806kohm	Sold in Tape and Reel of 5,000
MC0603SAF8252T5E	82.5kohm	Sold by Each
MC0603SAF8252T5E	82.5kohm	Sold in Tape and Reel of 5,000
MC0603SAF825JT5E	82.5ohm	Sold by Each
MC0603SAF825JT5E	82.5ohm	Sold in Tape and Reel of 5,000
MC0603SAF8203T5E	820kohm	Sold by Each
MC0603SAF8203T5E	820kohm	Sold in Tape and Reel of 5,000
MC0603SAF8253T5E	825kohm	Sold by Each
MC0603SAF8253T5E	825kohm	Sold in Tape and Reel of 5,000
MC0603SAF8202T5E	82kohm	Sold by Each
MC0603SAF8202T5E	82kohm	Sold in Tape and Reel of 5,000
MC0603SAF820JT5E	82ohm	Sold by Each
MC0603SAF820JT5E	82ohm	Sold in Tape and Reel of 5,000
MC0603SAF8452T5E	84.5kohm	Sold by Each
MC0603SAF8452T5E	84.5kohm	Sold in Tape and Reel of 5,000
MC0603SAF845JT5E	84.5ohm	Sold by Each
MC0603SAF845JT5E	84.5ohm	Sold in Tape and Reel of 5,000
MC0603SAF8453T5E	845kohm	Sold by Each
MC0603SAF8453T5E	845kohm	Sold in Tape and Reel of 5,000
MC0603SAF8662T5E	86.6kohm	Sold by Each

ALL RIGHTS RESERVED. NO PORTION OF THIS PUBLICATION, WHETHER IN WHOLE OR IN PART CAN BE REPRODUCED WITHOUT THE EXPRESS WRITTEN CONSENT OF SPC TECHNOLOGY.

SIZE	DWG. NO.	ELECTRONIC FILE	REV
A	Ta-1194	Ta-1194.dwg	A