LMax SMD Power Inductor

LMXS Series – Shielded Style D

FEATURES

- Magnetically shielded against radiation
- 0704 can help achieve longer battery life significantly in handheld communication devices.
- 1309 / 1915 designed for the higher current requirements of portable computers.
- 0704 hasceramic base with gold–plating
- 1309 / 1915 has LCP plastic base

APPLICATIONS

- Portable Telephones
- Personal Computers
- Other Various Electronic Appliances
- DC/DC Converters, etc.

CHARACTERISTICS

- Saturation Rated Current (IDC): The DC current when the inductance becomes 10% lower than its initial value. (Ta=25°C)
- Temperature Rise Current (I rms): The actual current when temperature of coil becomes Δ40°C. (Ta=25°C)
- Operating temperature range: -40 ~ 85°C

INDUCTANCE AND RATED CURRENT RANGES

• 0704	1.0 ~ 10000µH	3.0 ~ 0.02A
• 1309	1.0 ~ 1000µH	5.0 ~ 0.17A
• 1915	10 ~ 1000µH	3.9 ~ 0.53A

- Electrical specifications at 25°C

RoHS COMPLIANT

DIMENSIONS

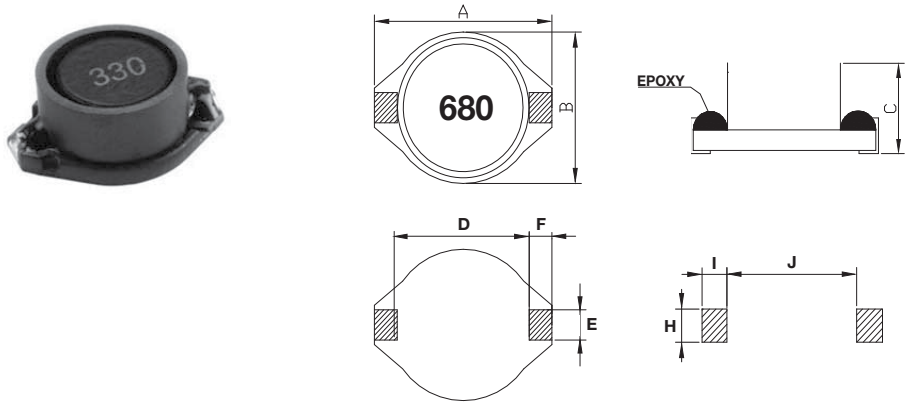

mm (inches)

Type	A max.	B max.	C max.	D	E	F	H	I	J
0704	6.60 (0.260)	4.45 (0.175)	2.92 (0.115)	4.32 (0.170)	1.27 (0.050)	1.02 (0.040)	3.56 (0.140)	1.40 (0.055)	4.06 (0.160)
1309	12.95 (0.510)	9.40 (0.370)	5.21 (0.205)	7.62 (0.300)	2.54 (0.100)	2.54 (0.100)	2.79 (0.110)	2.92 (0.115)	7.37 (0.290)
1915	18.54 (0.730)	15.24 (0.600)	7.62 (0.300)	12.70 (0.500)	2.54 (0.100)	2.54 (0.100)	2.79 (0.110)	2.92 (0.115)	12.45 (0.490)

HOW TO ORDER

LM	XS	0704	M	R04	D	T	A	S
Family	**Series**	**Size**	**Tolerance**	**Inductance**	**Style**	**Termination**	**Special**	**Packaging**
LM = Power Inductor	XS = Shielded	0704 = 7x4xh 1309 = 13x9xh (h = see catalog)	M = ±20%	R04 = 0.039µH R39 = 0.390µH 3R9 = 3.900µH 390 = 39.00µH 391 = 390.0µH 392 = 3900µH		T = Sn Plate	A = Standard	S = 13" Reel

The Important Information/Disclaimer is incorporated in the catalog where these specifications came from or available online at www.kyocera-avx.com/disclaimer/ by reference and should be reviewed in full before placing any order.

ELECTRICAL CHARACTERISTICS

0704

Codes	L (µH)	Tolerance	Test Condition		DCR (Ω) max.	SRF ref (MHz)	Q min.	I rms (A) max.
			L	Q				
1R0	1.0	M	100KHz, 0.1V	200KHz, 0.1V	0.040	250	30	3.00
1R5	1.5	M	100KHz, 0.1V	200KHz, 0.1V	0.045	125	30	2.30
2R2	2.2	M	100KHz, 0.1V	200KHz, 0.1V	0.050	120	40	1.80
3R3	3.3	M	100KHz, 0.1V	200KHz, 0.1V	0.055	120	40	1.60
4R7	4.7	M	100KHz, 0.1V	200KHz, 0.1V	0.060	105	40	1.40
6R8	6.8	M	100KHz, 0.1V	200KHz, 0.1V	0.065	50	40	1.20
100	10	M	100KHz, 0.1V	200KHz, 0.1V	0.075	38	40	1.00
150	15	M	100KHz, 0.1V	100KHz, 0.1V	0.090	33	40	0.80
220	22	M	100KHz, 0.1V	100KHz, 0.1V	0.11	25	40	0.70
330	33	M	100KHz, 0.1V	100KHz, 0.1V	0.19	20	40	0.60
470	47	M	100KHz, 0.1V	100KHz, 0.1V	0.23	20	40	0.50
680	68	M	100KHz, 0.1V	100KHz, 0.1V	0.29	15	40	0.40
101	100	M	100KHz, 0.1V	100KHz, 0.1V	0.48	10	40	0.30
151	150	M	100KHz, 0.1V	100KHz, 0.1V	0.59	9	40	0.26
221	220	M	100KHz, 0.1V	100KHz, 0.1V	0.90	6	40	0.22
331	330	M	100KHz, 0.1V	100KHz, 0.1V	1.40	5	40	0.20
471	470	M	100KHz, 0.1V	100KHz, 0.1V	1.80	4	40	0.19
681	680	M	100KHz, 0.1V	100KHz, 0.1V	2.20	3	40	0.18
102	1000	M	100KHz, 0.1V	100KHz, 0.1V	3.40	2	40	0.15
152	1500	M	100KHz, 0.1V	100KHz, 0.1V	4.20	2	50	0.12
222	2200	M	100KHz, 0.1V	100KHz, 0.1V	8.50	2	50	0.10
332	3300	M	100KHz, 0.1V	100KHz, 0.1V	11.0	1	50	0.08
472	4700	M	100KHz, 0.1V	100KHz, 0.1V	13.9	1	50	0.06
682	6800	M	100KHz, 0.1V	100KHz, 0.1V	25.0	1	50	0.04
103	10000	M	100KHz, 0.1V	100KHz, 0.1V	32.8	0.8	50	0.02

1309

Codes	L (µH)	Tolerance	Test Condition	DCR (Ω) max.	SRF ref (MHz)	IDC (A) max	I rms (A) max.
1R0	1.0	M	100KHz, 0.1V	0.021	140	5.6	5.0
1R5	1.5	M	100KHz, 0.1V	0.022	120	5.2	4.5
2R2	2.2	M	100KHz, 0.1V	0.032	80	5.0	3.8
3R3	3.3	M	100KHz, 0.1V	0.039	70	3.9	3.3
4R7	4.7	M	100KHz, 0.1V	0.054	40	3.2	2.7
6R8	6.8	M	100KHz, 0.1V	0.075	38	2.8	2.2
100	10	M	100KHz, 0.1V	0.101	35	2.4	2.0
150	15	M	100KHz, 0.1V	0.150	25	2.0	1.5
220	22	M	100KHz, 0.1V	0.207	19	1.6	1.3
330	33	M	100KHz, 0.1V	0.334	15	1.4	1.1
470	47	M	100KHz, 0.1V	0.472	13	1.0	0.8
680	68	M	100KHz, 0.1V	0.660	10	0.9	0.7
101	100	M	100KHz, 0.1V	1.110	7	0.8	0.6
151	150	M	100KHz, 0.1V	1.550	6	0.6	0.5
221	220	M	100KHz, 0.1V	2.000	5	0.5	0.37
102	1000	M	100KHz, 0.1V	8.300	2	0.32	0.17

The Important Information/Disclaimer is incorporated in the catalog where these specifications came from or available online at www.kyocera-avx.com/disclaimer/ by reference and should be reviewed in full before placing any order.

1915

Codes	L (µH)	Tolerance	Test Condition	DCR (Ω) max.	SRF ref (MHz)	IDC (A) max.	I rms (A) max.
100	10	M	100KHz, 0.1V	0.040	30	8.0	3.9
150	15	M	100KHz, 0.1V	0.048	20	7.00	3.4
220	22	M	100KHz, 0.1V	0.059	18	6.00	3.1
330	33	M	100KHz, 0.1V	0.075	14	5.00	2.8
470	47	M	100KHz, 0.1V	0.097	10	4.00	2.4
680	68	M	100KHz, 0.1V	0.138	9.0	3.00	2.0
101	100	M	100KHz, 0.1V	0.207	7.0	2.40	1.7
151	150	M	100KHz, 0.1V	0.293	6.0	2.10	1.3
221	220	M	100KHz, 0.1V	0.470	5.0	1.90	1.1
331	330	M	100KHz, 0.1V	0.780	4.0	1.10	0.86
471	470	M	100KHz, 0.1V	1.080	3.0	1.10	0.73
681	680	M	100KHz, 0.1V	1.400	2.5	0.96	0.64
102	1000	M	100KHz, 0.1V	2.010	2.0	0.80	0.53

The Important Information/Disclaimer is incorporated in the catalog where these specifications came from or available online at www.kyocera-avx.com/disclaimer/ by reference and should be reviewed in full before placing any order.