REVISION T

DO NOT SCALE FROM THIS PRINT

DESIGNED & DIMENSIONED IN MILLIMETERS[INCHES]

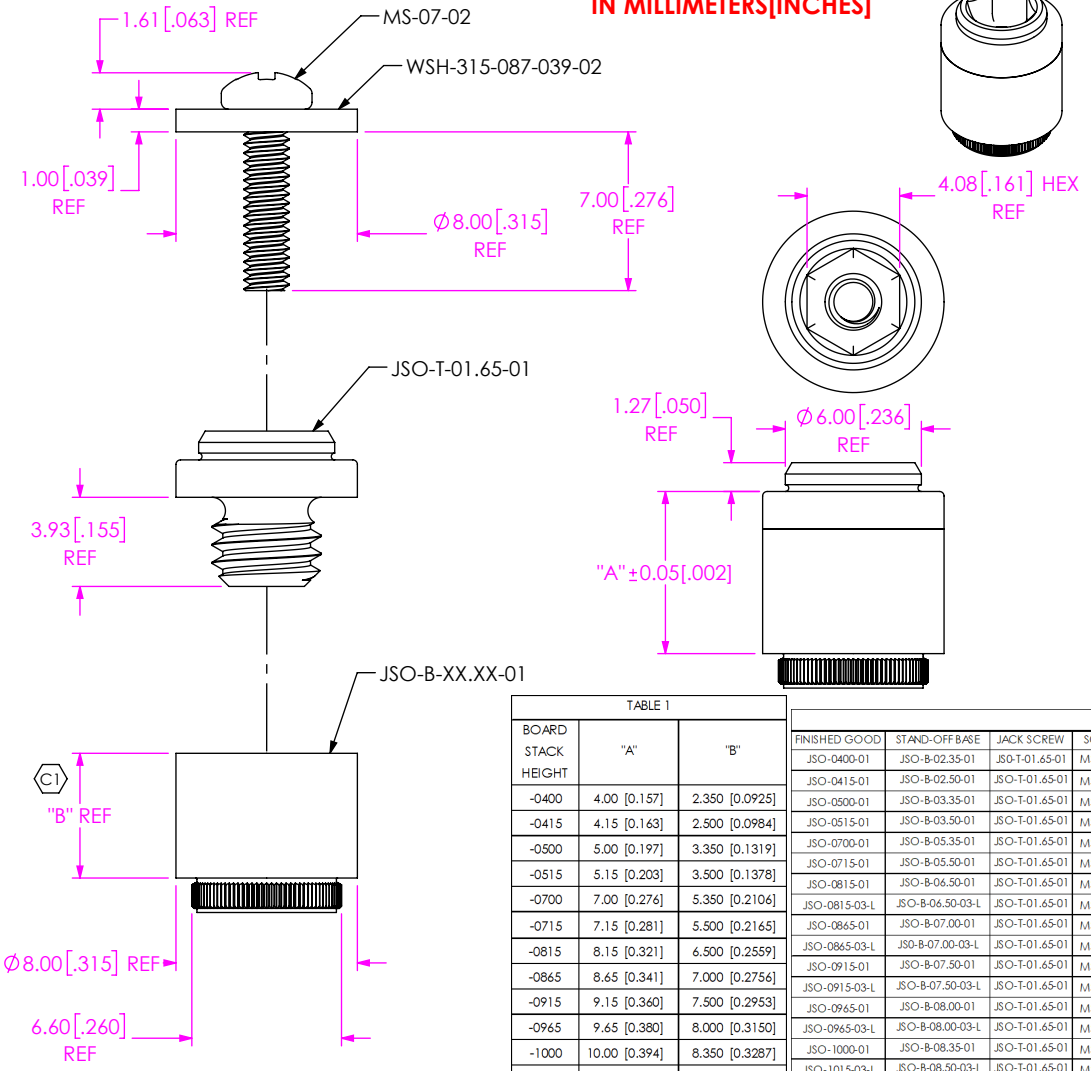

FIG 1
JSO-XXXX-01 SHOWN

JSO-XXXX-XX-X

BOARD STACK HEIGHT
-0400, -0415, -0500, -0515, -0700, -0715, -0815, -0865, -0915, -0965, -1000, -1015, -1065, -1115, -1165, -1215, -1265, -1315, -1365, -1415, -1515, -1565, -1600, -1615, -1665, -1715, -1765, -1865, -3500

LOCKING OPTION
-L: LOCKING COMPOUND (NOT AVAILABLE WITH -01 LEAD STYLE, REQUIRED FOR -03 LEAD STYLE)

LEAD STYLE
*=NOT TOOLED
**=NOT ENGINEERING APPROVED

-01: PRESS-IN
(FOR STACK HEIGHTS -0400, -0415, -0500, -0515, -0700, -0715,-0815, -0865, -0915, -0965, -1000, -1065, -1165, -1215, -1265, -1365, -1415, -1465, -1515, -1565, -1600, -1665, -1715, -1765, -1865 ONLY)
-03: THREADED
(FOR STACK HEIGHTS -0815, -0865, -0915, -0965, -1015, -1065, -1115, -1165, -1215, -1265, -1315, -1365, -1415, -1465, -1515, -1565, -1615, -1665, -1715, -1765, -1865, *-3500 ONLY)
(SEE SHT 2, FIG 2)

RECOMMENDED BOARD CUTOUT
(-01: PRESS-IN ANDJACK SCREW)

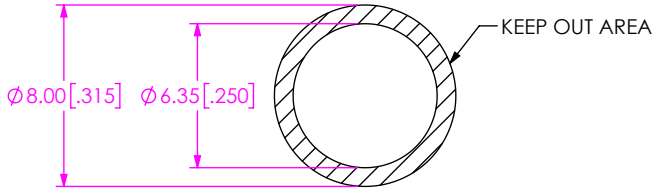

TABLE 1

BOARD STACK HEIGHT	"A"	"B"
-0400	4.00 [0.157]	2.350 [0.0925]
-0415	4.15 [0.163]	2.500 [0.0984]
-0500	5.00 [0.197]	3.350 [0.1319]
-0515	5.15 [0.203]	3.500 [0.1378]
-0700	7.00 [0.276]	5.350 [0.2106]
-0715	7.15 [0.281]	5.500 [0.2165]
-0815	8.15 [0.321]	6.500 [0.2559]
-0865	8.65 [0.341]	7.000 [0.2756]
-0915	9.15 [0.360]	7.500 [0.2953]
-0965	9.65 [0.380]	8.000 [0.3150]
-1000	10.00 [0.394]	8.350 [0.3287]
-1015	10.15 [0.400]	8.500 [0.3346]
-1065	10.65 [0.419]	9.000 [0.3543]
-1115	11.15 [0.439]	9.500 [0.3740]
-1165	11.65 [0.459]	10.000 [0.3937]
-1215	12.15 [0.478]	10.500 [0.4134]
-1265	12.65 [0.498]	11.000 [0.4331]
-1315	13.15 [0.518]	11.500 [0.4528]
-1365	13.65 [0.537]	12.000 [0.4724]
-1415	14.15 [0.557]	12.500 [0.4921]
-1465	14.65 [0.577]	13.000 [0.5118]
-1515	15.15 [0.596]	13.500 [0.5315]
-1565	15.65 [0.616]	14.000 [0.5512]
-1600	16.00 [0.630]	14.350 [0.5650]
-1615	16.15 [0.636]	14.500 [0.5709]
-1665	16.65 [0.656]	15.000 [0.5906]
-1715	17.15 [0.675]	15.500 [0.6102]
-1765	17.65 [0.695]	16.000 [0.6299]
-1865	18.65 [0.734]	17.000 [0.6693]
-3500	35.00 [1.378]	33.350 [1.3130]

TABLE 2 - BOM

FINISHED GOOD	STAND-OFF BASE	JACK SCREW	SCREW	NUT	WASHER	FINISHED GOOD	STAND-OFF BASE	JACK SCREW	SCREW	NUT	WASHER
JSO-0400-01	JSO-B-02.35-01	JSO-T-01.65-01	MS-07-02	N/A	WSH-315-087-039-02	JSO-1265-01	JSO-B-11.00-01	JSO-T-01.65-01	MS-07-02	N/A	WSH-315-087-039-02
JSO-0415-01	JSO-B-02.50-01	JSO-T-01.65-01	MS-07-02	N/A	WSH-315-087-039-02	JSO-1265-03-L	JSO-B-11.00-03-L	JSO-T-01.65-01	MS-07-02	SN-03-02	WSH-315-087-039-02
JSO-0500-01	JSO-B-03.35-01	JSO-T-01.65-01	MS-07-02	N/A	WSH-315-087-039-02	JSO-1315-03-L	JSO-B-11.50-03-L	JSO-T-01.65-01	MS-07-02	SN-03-02	WSH-315-087-039-02
JSO-0515-01	JSO-B-03.50-01	JSO-T-01.65-01	MS-07-02	N/A	WSH-315-087-039-02	JSO-1365-01	JSO-B-12.00-01	JSO-T-01.65-01	MS-07-02	N/A	WSH-315-087-039-02
JSO-0700-01	JSO-B-05.35-01	JSO-T-01.65-01	MS-07-02	N/A	WSH-315-087-039-02	JSO-1365-03-L	JSO-B-12.00-03-L	JSO-T-01.65-01	MS-07-02	SN-03-02	WSH-315-087-039-02
JSO-0715-01	JSO-B-05.50-01	JSO-T-01.65-01	MS-07-02	N/A	WSH-315-087-039-02	JSO-1415-01	JSO-B-12.50-01	JSO-T-01.65-01	MS-07-02	N/A	WSH-315-087-039-02
JSO-0815-01	JSO-B-06.50-01	JSO-T-01.65-01	MS-07-02	N/A	WSH-315-087-039-02	JSO-1415-03-L	JSO-B-12.50-03-L	JSO-T-01.65-01	MS-07-02	SN-03-02	WSH-315-087-039-02
JSO-0815-03-L	JSO-B-06.50-03-L	JSO-T-01.65-01	MS-07-02	SN-03-02	WSH-315-087-039-02	JSO-1465-01	JSO-B-13.00-01	JSO-T-01.65-01	MS-07-02	N/A	WSH-315-087-039-02
JSO-0865-01	JSO-B-07.00-01	JSO-T-01.65-01	MS-07-02	N/A	WSH-315-087-039-02	JSO-1465-03-L	JSO-B-13.00-03-L	JSO-T-01.65-01	MS-07-02	SN-03-02	WSH-315-087-039-02
JSO-0865-03-L	JSO-B-07.00-03-L	JSO-T-01.65-01	MS-07-02	SN-03-02	WSH-315-087-039-02	JSO-1515-01	JSO-B-13.50-01	JSO-T-01.65-01	MS-07-02	N/A	WSH-315-087-039-02
JSO-0915-01	JSO-B-07.50-01	JSO-T-01.65-01	MS-07-02	N/A	WSH-315-087-039-02	JSO-1515-03-L	JSO-B-13.50-03-L	JSO-T-01.65-01	MS-07-02	SN-03-02	WSH-315-087-039-02
JSO-0915-03-L	JSO-B-07.50-03-L	JSO-T-01.65-01	MS-07-02	SN-03-02	WSH-315-087-039-02	JSO-1565-01	JSO-B-14.00-01	JSO-T-01.65-01	MS-07-02	N/A	WSH-315-087-039-02
JSO-0965-01	JSO-B-08.00-01	JSO-T-01.65-01	MS-07-02	N/A	WSH-315-087-039-02	JSO-1565-03-L	JSO-B-14.00-03-L	JSO-T-01.65-01	MS-07-02	SN-03-02	WSH-315-087-039-02
JSO-0965-03-L	JSO-B-08.00-03-L	JSO-T-01.65-01	MS-07-02	SN-03-02	WSH-315-087-039-02	JSO-1600-01	JSO-B-14.35-01	JSO-T-01.65-01	MS-07-02	N/A	WSH-315-087-039-02
JSO-1000-01	JSO-B-08.35-01	JSO-T-01.65-01	MS-07-02	N/A	WSH-315-087-039-02	JSO-1615-03-L	JSO-B-14.50-03-L	JSO-T-01.65-01	MS-07-02	SN-03-02	WSH-315-087-039-02
JSO-1015-03-L	JSO-B-08.50-03-L	JSO-T-01.65-01	MS-07-02	SN-03-02	WSH-315-087-039-02	JSO-1665-01	JSO-B-15.00-01	JSO-T-01.65-01	MS-07-02	N/A	WSH-315-087-039-02
JSO-1065-01	JSO-B-09.00-01	JSO-T-01.65-01	MS-07-02	N/A	WSH-315-087-039-02	JSO-1665-03-L	JSO-B-15.00-03-L	JSO-T-01.65-01	MS-07-02	SN-03-02	WSH-315-087-039-02
JSO-1065-03-L	JSO-B-09.00-03-L	JSO-T-01.65-01	MS-07-02	SN-03-02	WSH-315-087-039-02	JSO-1715-01	JSO-B-15.50-01	JSO-T-01.65-01	MS-07-02	N/A	WSH-315-087-039-02
JSO-1115-03-L	JSO-B-09.50-03-L	JSO-T-01.65-01	MS-07-02	SN-03-02	WSH-315-087-039-02	JSO-1715-03-L	JSO-B-15.50-03-L	JSO-T-01.65-01	MS-07-02	SN-03-02	WSH-315-087-039-02
JSO-1165-01	JSO-B-10.00-01	JSO-T-01.65-01	MS-07-02	N/A	WSH-315-087-039-02	JSO-1765-01	JSO-B-16.00-01	JSO-T-01.65-01	MS-07-02	N/A	WSH-315-087-039-02
JSO-1165-03-L	JSO-B-10.00-03-L	JSO-T-01.65-01	MS-07-02	SN-03-02	WSH-315-087-039-02	JSO-1765-03-L	JSO-B-16.00-03-L	JSO-T-01.65-01	MS-07-02	SN-03-02	WSH-315-087-039-02
JSO-1215-01	JSO-B-10.50-01	JSO-T-01.65-01	MS-07-02	N/A	WSH-315-087-039-02	JSO-1865-01	JSO-B-17.00-01	JSO-T-01.65-01	MS-07-02	N/A	WSH-315-087-039-02
JSO-1215-03-L	JSO-B-10.50-03-L	JSO-T-01.65-01	MS-07-02	SN-03-02	WSH-315-087-039-02	JSO-1865-03-L	JSO-B-17.00-03-L	JSO-T-01.65-01	MS-07-02	SN-03-02	WSH-315-087-039-02
QTY = 1 FOR ALL COMPONENTS						JSO-3500-03-L	JSO-B-33.35-03-L	JSO-T-01.65-01	MS-07-02	SN-03-02	WSH-315-087-039-02

NOTES:
1. Ⓒ REPRESENTS CRITICAL DIMENSION
2. STANDOFFS TO BE USED WITH 1.57[.062]MIN THICK BOARDS. -03 FIXED SIDE PCB MAX THICKNESS OF 3.16[.124]
3. COMPONENTS ARE TO BE BULK PACKAGED IN SEPARATE BAGS AND SHOULD NOT LIST INDIVIDUAL COMPONENT QUANTITY ON THE LABEL. ALL COMPONENT BAGS ARE TO BE PACKAGED IN A LARGER BAG WITH THE FINAL PART NUMBER QUANTITY OF ASSEMBLIES ON THE LABEL.
4. STANDOFFS ARE DESIGNED 0.15MM LONGER THAN CONNECTOR STACK HEIGHTS TO ALLOW FOR PROCESSING VARIABLES.
5. TORQUE TO 2.5 – 3.5 IN*LBS TO SECURE FASTENER IN A STATIC ENVIRONMENT ASSUMING RECOMMENDED BOARD TO BOARD DISTANCES ARE ACHIEVED WITHOUT DAMAGE TO THE PCB, HARDWARE OR OTHER COMPONENTS.

UNLESS OTHERWISE SPECIFIED, DIMENSIONS ARE IN MILLIMETERS.
TOLERANCES ARE:
DECIMALS
X.X: ±0.3 [.01]
X.XX: ±0.13 [.005]
X.XXX: ±0.051 [.0020]
ANGLES
2 °

PROPRIETARY NOTE
THIS DOCUMENT CONTAINS CONFIDENTIAL AND PROPRIETARY INFORMATION AND ALL DESIGN, MANUFACTURING, REPRODUCTION, USE, PATENT RIGHTS AND SALES RIGHTS ARE EXPRESSLY RESERVED BY SAMTEC, INC. THIS DOCUMENT SHALL NOT BE DISCLOSED, IN WHOLE OR PART, TO ANY UNAUTHORIZED PERSON OR ENTITY NOR REPRODUCED, TRANSFERRED OR INCORPORATED IN ANY OTHER PROJECT IN ANY MANNER WITHOUT THE EXPRESS WRITTEN CONSENT OF SAMTEC, INC.

MATERIAL:
STAINLESS STEEL
LOCKING COMPOUND

DO NOT SCALE DRAWING
SHEET SCALE: 3:1

c:\enterprisevault\DWG\MISC\MKTG\JSO-XXXX-XX-X-MKT.SLDDRW

samtec
520 PARK EAST BLVD, NEW ALBANY, IN 47150
PHONE: 812-944-6733 FAX: 812-948-5047
e-Mail info@SAMTEC.com code 55322

DESCRIPTION:
JACK SCREW STAND-OFF

DWG. NO.
JSO-XXXX-XX-X

BY: KYLE B 2/4/2014

REVISION T

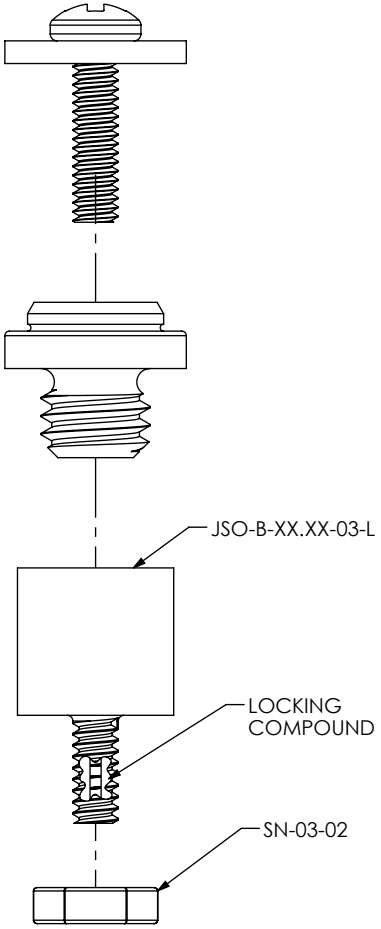

FIG 2
JSO-XXXX-03-L
(SAME AS FIG 1, EXCEPT AS SHOWN)

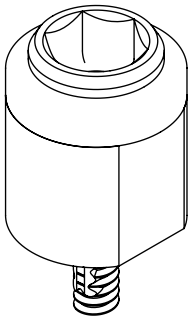

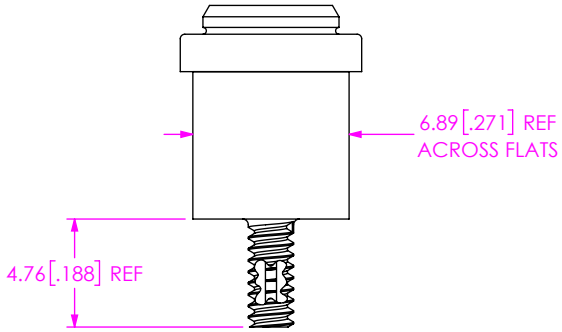

RECOMMENDED BOARD CUTOUT
(-03: THREADED) (SEE NOTE 2)

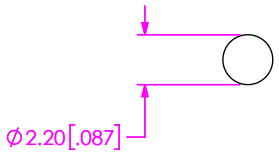

* PROPRIETARY NOTE *
THIS DOCUMENT CONTAINS CONFIDENTIAL AND PROPRIETARY INFORMATION AND ALL DESIGN, MANUFACTURING, REPRODUCTION, USE, PATENT RIGHTS AND SALES RIGHTS ARE EXPRESSLY RESERVED BY SAMTEC, INC. THIS DOCUMENT SHALL NOT BE DISCLOSED, IN WHOLE OR PART, TO ANY UNAUTHORIZED PERSON OR ENTITY NOR REPRODUCED, TRANSFERRED OR INCORPORATED IN ANY OTHER PROJECT IN ANY MANNER WITHOUT THE EXPRESS WRITTEN CONSENT OF SAMTEC, INC.

DO NOT SCALE DRAWING

SHEET SCALE: 3:1

samtec
520 PARK EAST BLVD, NEW ALBANY, IN 47150
PHONE: 812-944-6733 FAX: 812-948-5047
e-Mail info@SAMTEC.com code 55322

DESCRIPTION: JACK SCREW STAND-OFF

DWG. NO. JSO-XXXX-XX-X

BY: KYLE B 2/4/2014 SHEET 2 OF 2

c:\enterprisevault\DWG\MISC\MKTG\JSO-XXXX-XX-X-MKT.SLDDRW