IHPT® Haptic Feedback Actuator With Immersion License

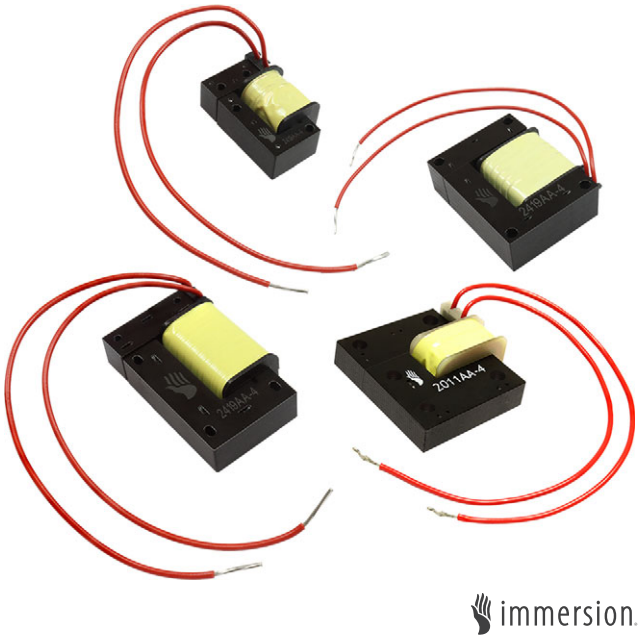

FEATURES

- High impulse vibrations for clear tactile feedback in noisy environments
- Drives 0.5 kg load to 6 *g*'s of acceleration with 12 V, 5 ms pulse (tested with Vishay's custom spring return fixture)
- Standard lead termination is dipped 100 % tin solder; customer specific connectors available upon request
- Two-piece magnetic solenoid construction with mounting holes; comprised of stationary "U" core and moving "I-bar"
- Material categorization: for definitions of compliance please see www.vishay.com/doc?99912

Pb-free
RoHS COMPLIANT
HALOGEN FREE
GREEN (5-2008)

APPLICATIONS

- Touch screens
- Appliances, industrial equipment, factory automation and control
- Touch screens for human-machine interfaces

LINKS TO ADDITIONAL RESOURCES

Product Page
3D Models

STANDARD ELECTRICAL SPECIFICATIONS						
PART NUMBER	FORCE OUTPUT (N)	FORCE COEFFICIENT (1)	RESPONSE TIME TYP. (ms)	L_0 INDUCTANCE ± 20 % AT 1 kHz, 0.25 V, 0 A (mH)	DCR TYP. (Ω)	DCR MAX. (Ω)
IHPT1207AGELR39AB0	25	0.39	5	1.35	0.95	1.04
IHPT1710ACEL1R2AB0	45	1.2	5	4.04	2.0	2.2
IHPT1411AFELR73AB0	80	0.73	5	1.8	0.95	1.09
IHPT1614ACEL2R7BB0	120	2.7	5	3.5	1.2	1.32

Notes

- All specifications are referenced to 25 °C ambient, and assume a 0.75 mm (0.030") gap
- Operating temperature range -40 °C to +105 °C
- The part temperature (ambient + temperature rise) should not exceed 105 °C under worst case operating conditions. Circuit design, component placement, PWB trace size and thickness, airflow and other cooling provisions all affect the part temperature. Part temperature should be verified in the end application
- Rated voltage: 16 V maximum
- Dielectric withstand voltage (coil to core) = 150 V_{DC}

(1) Applied force, in newtons, can be estimated by the following equation: F = FORCE COEFFICIENT x I_{PK}^2

This product is covered by a license from Immersion or its affiliates solely when incorporated into haptic products in an authorized field of use as set forth in more detail at the following link: www.vishay.com/doc?34602. Protected under one or more of the U.S. Patents found at the following address www.immersion.com/patent-marking.html and other patents.

For technical questions, contact: magnetics@vishay.com

THIS DOCUMENT IS SUBJECT TO CHANGE WITHOUT NOTICE. THE PRODUCTS DESCRIBED HEREIN AND THIS DOCUMENT ARE SUBJECT TO SPECIFIC DISCLAIMERS, SET FORTH AT www.vishay.com/doc?91000

GLOBAL PART NUMBER

I H P T	1 4 1 1 A F	E L	R 7 3	A B 0
PRODUCT FAMILY	SIZE	PACKAGE CODE	FORCE COEFFICIENT	SERIES
		EL = includes Immersion license	**R73** = 0.73	

DESCRIPTION

IHPT-1411AF	R73	TRAY	e3
MODEL	FORCE COEFFICIENT	PACKAGE CODE	JEDEC® LEAD (Pb)-FREE STANDARD

MATERIAL

Core	Laminated steel
Wire	Copper, PU/PA insulated
Solder	Hot dip tin

SOLDER COMPOSITION

Sn	99.3 %
Cu	0.7 %

DIMENSIONS in inches [millimeters]

IHPT1207AGELR39AB0 (25N)

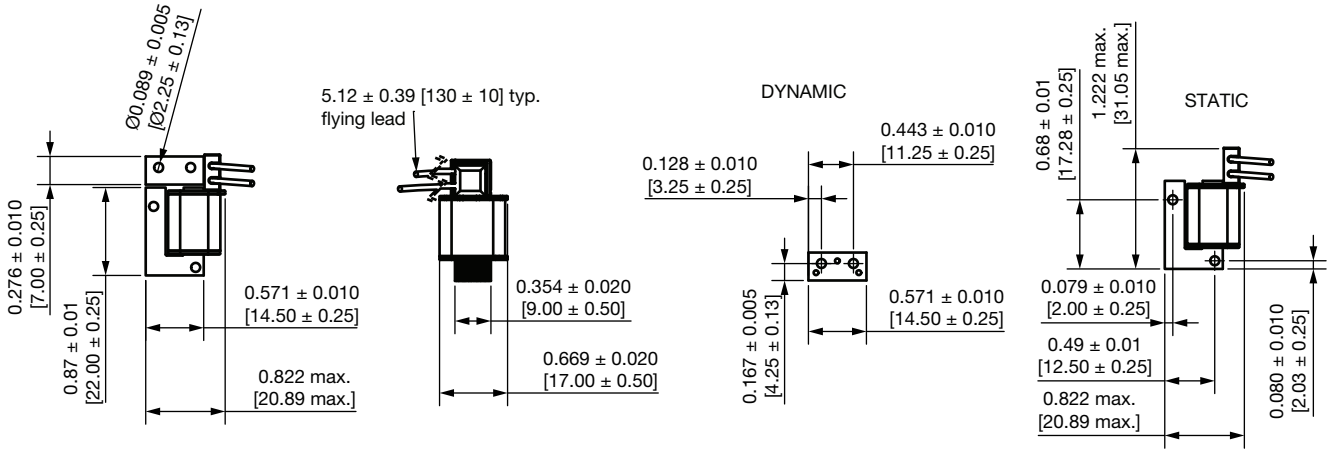

For technical questions, contact: magnetics@vishay.com

THIS DOCUMENT IS SUBJECT TO CHANGE WITHOUT NOTICE. THE PRODUCTS DESCRIBED HEREIN AND THIS DOCUMENT ARE SUBJECT TO SPECIFIC DISCLAIMERS, SET FORTH AT www.vishay.com/doc?91000

DIMENSIONS in inches [millimeters]

IHPT1710ACEL1R2AB0 (45N)

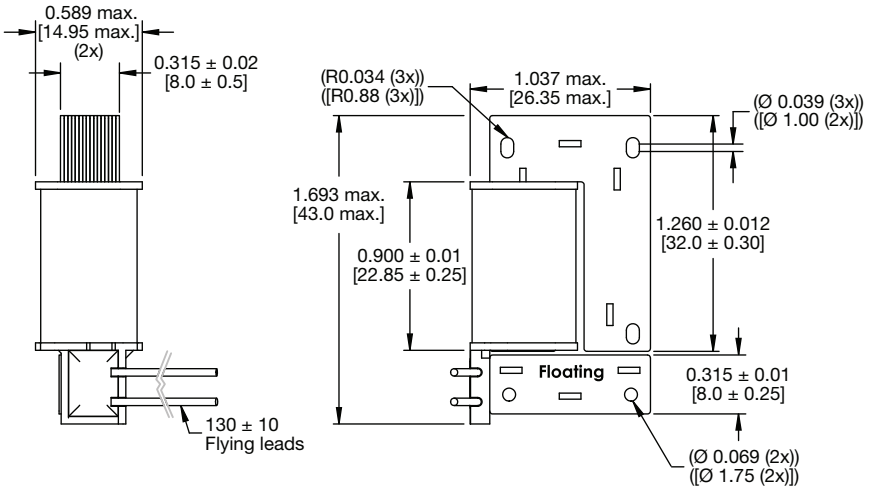

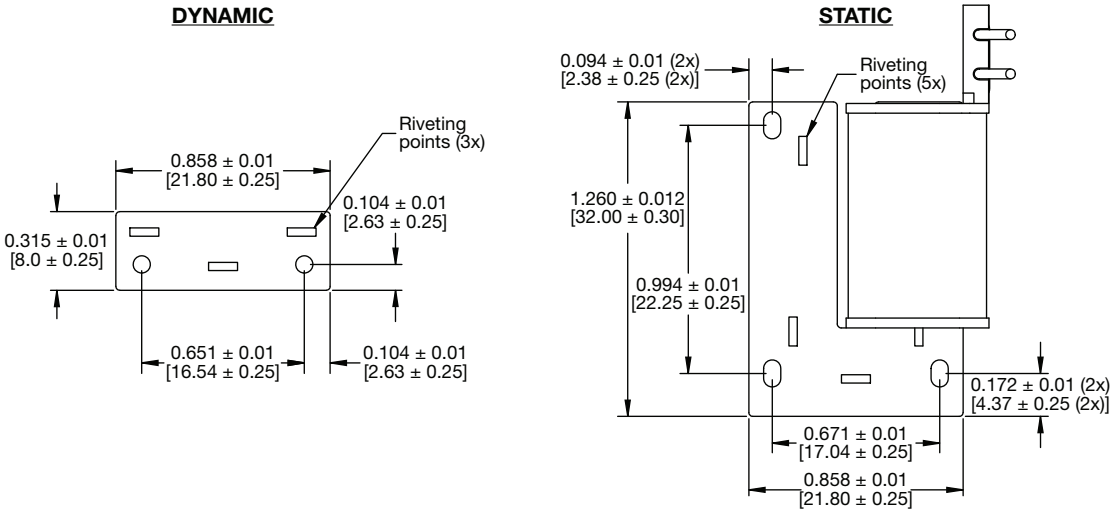

IHPT1411AFELR73AB0 (80N)

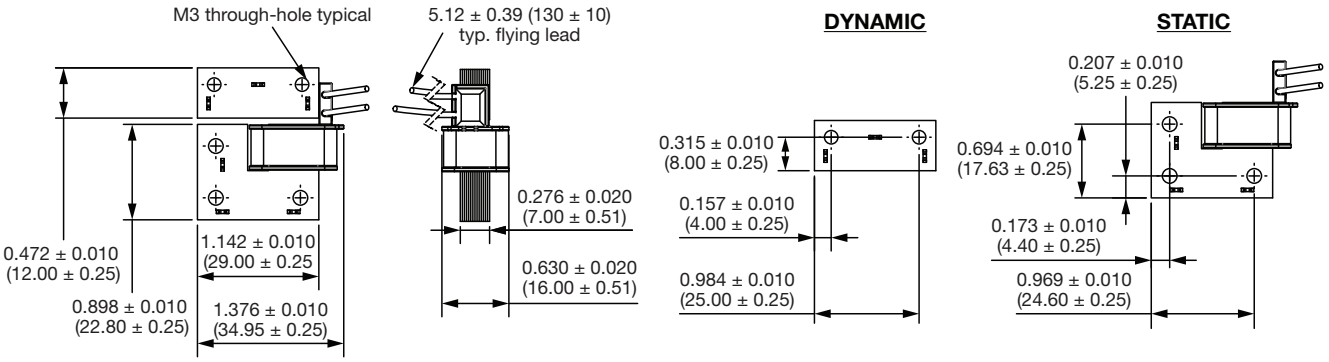

For technical questions, contact: magnetics@vishay.com

THIS DOCUMENT IS SUBJECT TO CHANGE WITHOUT NOTICE. THE PRODUCTS DESCRIBED HEREIN AND THIS DOCUMENT ARE SUBJECT TO SPECIFIC DISCLAIMERS, SET FORTH AT www.vishay.com/doc?91000

DIMENSIONS in inches [millimeters]

IHPT1614ACEL2R7BB0 (120N)

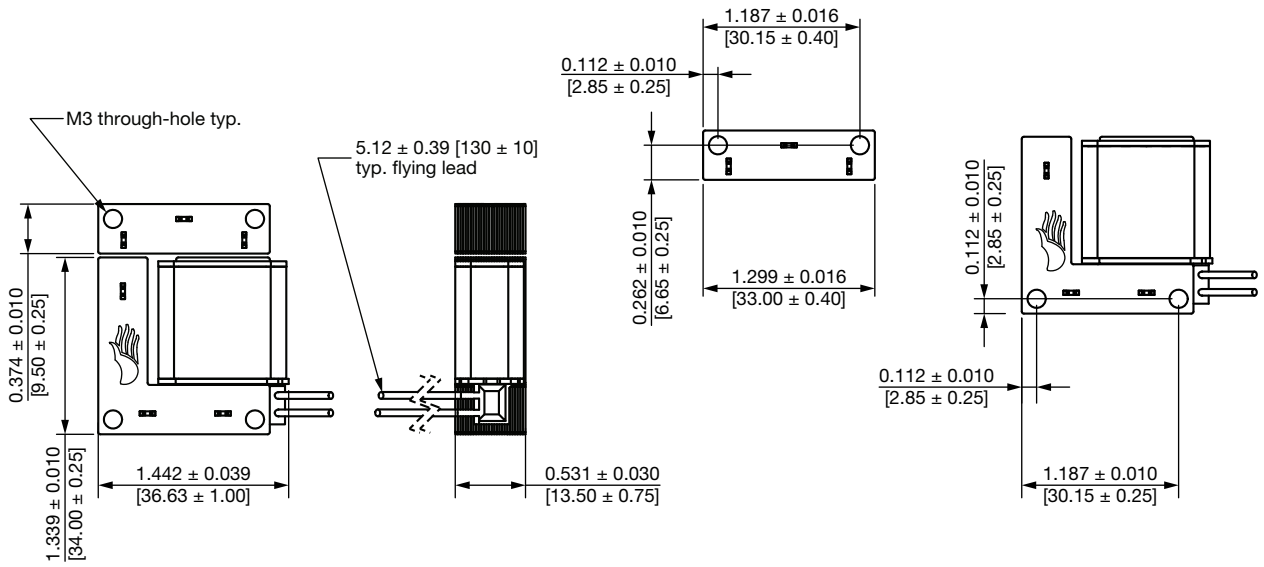

TYPICAL APPLICATION

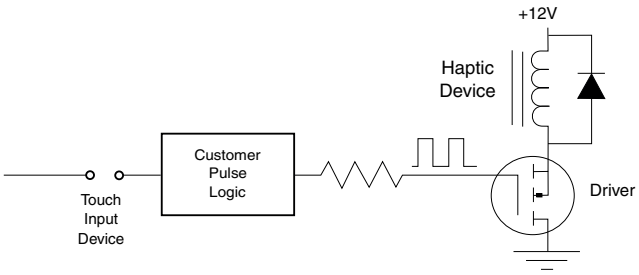

For technical questions, contact: magnetics@vishay.com

THIS DOCUMENT IS SUBJECT TO CHANGE WITHOUT NOTICE. THE PRODUCTS DESCRIBED HEREIN AND THIS DOCUMENT ARE SUBJECT TO SPECIFIC DISCLAIMERS, SET FORTH AT www.vishay.com/doc?91000

PEAK FORCE RESPONSE (Typical)

IHPT1207AGELR39AB0 (25N)

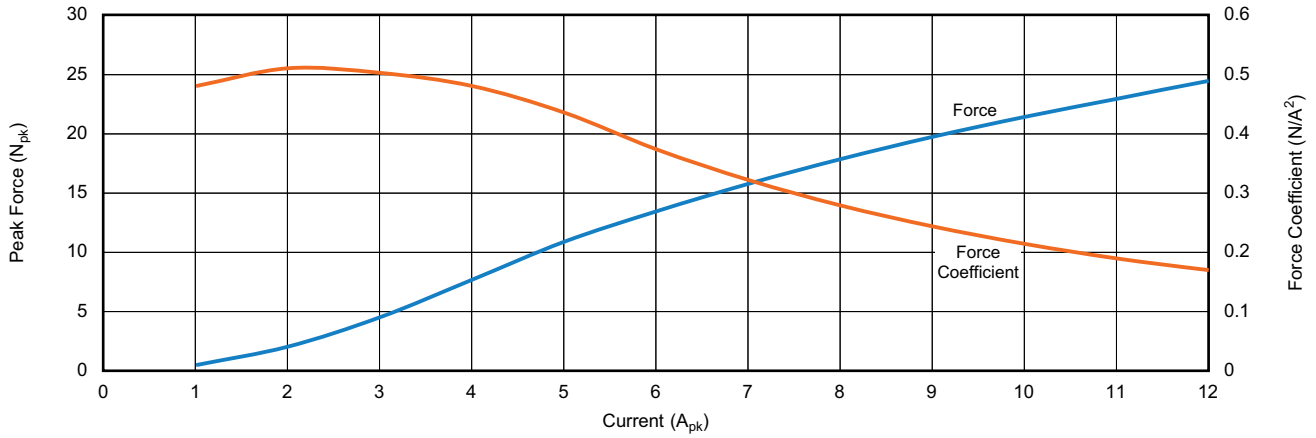

IHPT1710ACEL1R2AB0 (45N)

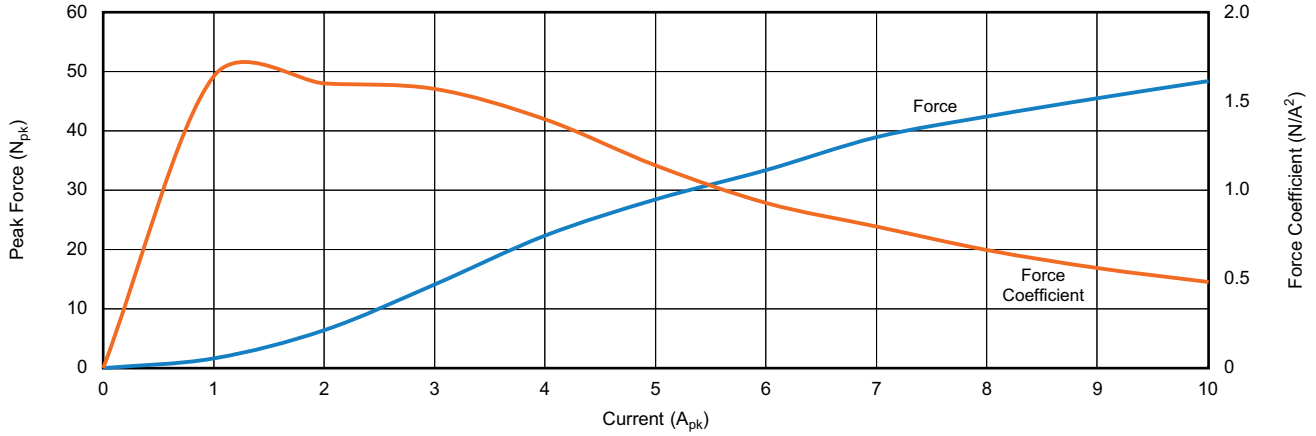

IHPT1411AFELR73AB0 (80N)

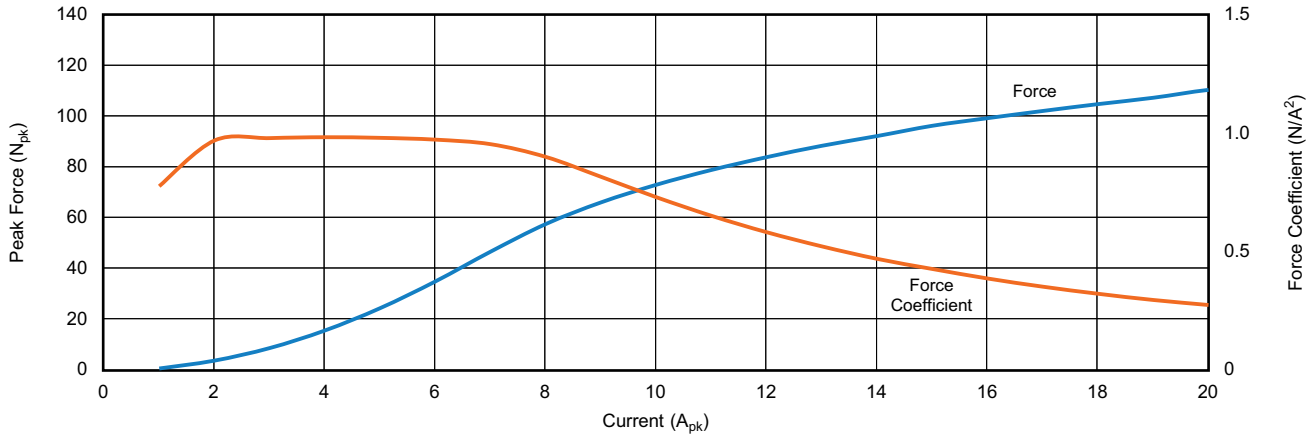

For technical questions, contact: magnetics@vishay.com
THIS DOCUMENT IS SUBJECT TO CHANGE WITHOUT NOTICE. THE PRODUCTS DESCRIBED HEREIN AND THIS DOCUMENT ARE SUBJECT TO SPECIFIC DISCLAIMERS, SET FORTH AT www.vishay.com/doc?91000

PEAK FORCE RESPONSE (Typical)

IHPT1614ACEL2R7BB0 (120N)

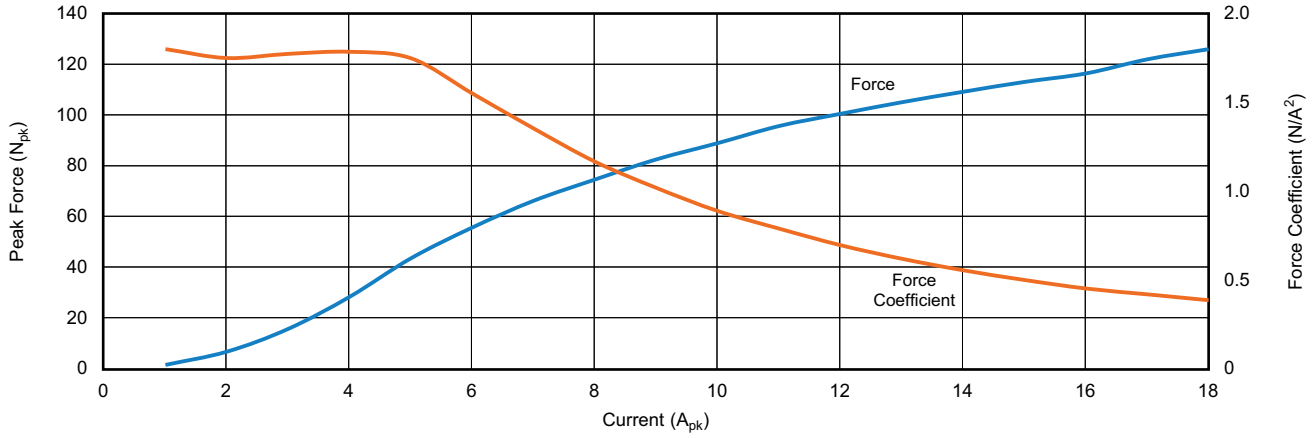

TEMPERATURE RISE

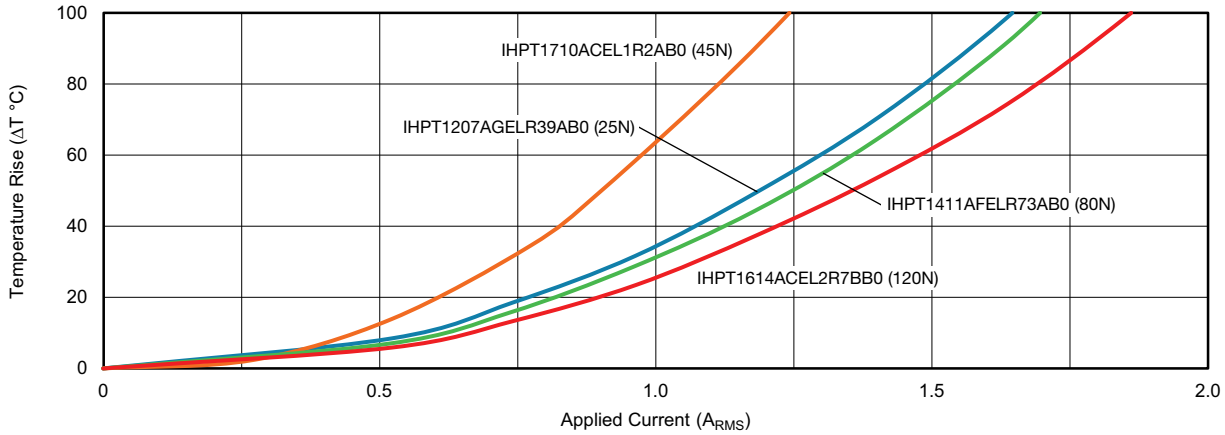

For technical questions, contact: magnetics@vishay.com

THIS DOCUMENT IS SUBJECT TO CHANGE WITHOUT NOTICE. THE PRODUCTS DESCRIBED HEREIN AND THIS DOCUMENT ARE SUBJECT TO SPECIFIC DISCLAIMERS, SET FORTH AT www.vishay.com/doc?91000

Disclaimer

ALL PRODUCT, PRODUCT SPECIFICATIONS AND DATA ARE SUBJECT TO CHANGE WITHOUT NOTICE TO IMPROVE RELIABILITY, FUNCTION OR DESIGN OR OTHERWISE.

Vishay Intertechnology, Inc., its affiliates, agents, and employees, and all persons acting on its or their behalf (collectively, “Vishay”), disclaim any and all liability for any errors, inaccuracies or incompleteness contained in any datasheet or in any other disclosure relating to any product.

Vishay makes no warranty, representation or guarantee regarding the suitability of the products for any particular purpose or the continuing production of any product. To the maximum extent permitted by applicable law, Vishay disclaims (i) any and all liability arising out of the application or use of any product, (ii) any and all liability, including without limitation special, consequential or incidental damages, and (iii) any and all implied warranties, including warranties of fitness for particular purpose, non-infringement and merchantability.

Statements regarding the suitability of products for certain types of applications are based on Vishay's knowledge of typical requirements that are often placed on Vishay products in generic applications. Such statements are not binding statements about the suitability of products for a particular application. It is the customer's responsibility to validate that a particular product with the properties described in the product specification is suitable for use in a particular application. Parameters provided in datasheets and / or specifications may vary in different applications and performance may vary over time. All operating parameters, including typical parameters, must be validated for each customer application by the customer's technical experts. Product specifications do not expand or otherwise modify Vishay's terms and conditions of purchase, including but not limited to the warranty expressed therein.

Hyperlinks included in this datasheet may direct users to third-party websites. These links are provided as a convenience and for informational purposes only. Inclusion of these hyperlinks does not constitute an endorsement or an approval by Vishay of any of the products, services or opinions of the corporation, organization or individual associated with the third-party website. Vishay disclaims any and all liability and bears no responsibility for the accuracy, legality or content of the third-party website or for that of subsequent links.

Vishay products are not designed for use in life-saving or life-sustaining applications or any application in which the failure of the Vishay product could result in personal injury or death unless specifically qualified in writing by Vishay. Customers using or selling Vishay products not expressly indicated for use in such applications do so at their own risk. Please contact authorized Vishay personnel to obtain written terms and conditions regarding products designed for such applications.

No license, express or implied, by estoppel or otherwise, to any intellectual property rights is granted by this document or by any conduct of Vishay. Product names and markings noted herein may be trademarks of their respective owners.

© 2026 VISHAY INTERTECHNOLOGY, INC. ALL RIGHTS RESERVED

THIS DOCUMENT IS SUBJECT TO CHANGE WITHOUT NOTICE. THE PRODUCTS DESCRIBED HEREIN AND THIS DOCUMENT ARE SUBJECT TO SPECIFIC DISCLAIMERS, SET FORTH AT www.vishay.com/doc?91000