Semi-Shielded SMD Power Inductors

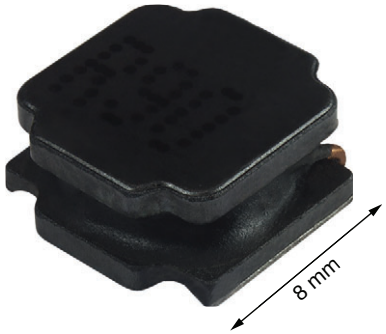

FEATURES

- Semi-shielded ferrite construction
- 8.0 mm x 8.0 mm x 4.2 mm SMD package
- Material categorization: for definitions of compliance please see www.vishay.com/doc?99912

Pb-free

RoHS COMPLIANT

HALOGEN FREE

APPLICATIONS

- DC/DC power supplies
- LCD displays
- Noise suppression and filtering
- Lighting drivers
- Battery powered devices

ELECTRICAL SPECIFICATIONS

Operating temperature:

-40 °C to +125 °C (temperature rise included)

Resistance to solder heat:

260 °C for 10 s (3 times max. through reflow)

STANDARD ELECTRICAL SPECIFICATIONS						
PART NUMBER	INDUCTANCE AT 0 A (µH)	IND. TOL. (%)	DCR ± 30 % (mΩ)	HEAT RATING CURRENT DC (A) (1)	SATURATION CURRENT DC (A) (2)	SRF TYP. (MHz)
IFSC3232DBERR90N01	0.9	30	6	7.8	11	85
IFSC3232DBER1R4N01	1.4	30	7	7	9	63
IFSC3232DBER2R0N01	2	30	9	6.3	7.4	50
IFSC3232DBER3R6N01	3.6	30	15	4.9	5.3	34
IFSC3232DBER4R7N01	4.7	30	18	4.1	4.7	30
IFSC3232DBER6R8M01	6.8	20	25	3.7	4	24
IFSC3232DBER100M01	10	20	34	3.1	3.4	22
IFSC3232DBER150M01	15	20	50	2.4	2.7	16
IFSC3232DBER220M01	22	20	66	2.2	2.2	13
IFSC3232DBER330M01	33	20	100	1.7	1.9	12
IFSC3232DBER470M01	47	20	150	1.4	1.5	8
IFSC3232DBER680M01	68	20	230	1.1	1.2	7
IFSC3232DBER101M01	100	20	290	1	1	6

Notes

- All test data is referenced to 25 °C ambient
- Test condition: 100 kHz, 1 V
- Storage condition: -40 °C to +125 °C (on board); less than 40°C and < 60 % RH (in component packaging)

(1) DC current (A) that will cause an approximate ΔT of +40 °C

(2) DC current (A) that will cause L_0 to drop approximately 30 %

For technical questions, contact: magnetics@vishay.com

THIS DOCUMENT IS SUBJECT TO CHANGE WITHOUT NOTICE. THE PRODUCTS DESCRIBED HEREIN AND THIS DOCUMENT ARE SUBJECT TO SPECIFIC DISCLAIMERS, SET FORTH AT www.vishay.com/doc?91000

DIMENSIONS in inches [millimeters]

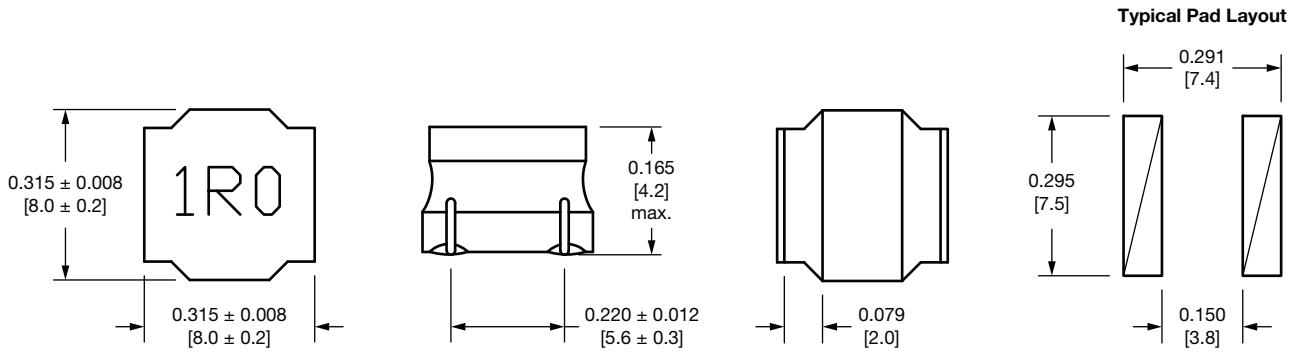

DESCRIPTION

IFSC-3232DB-01	10 µH	± 20 %	ER	e3
MODEL	INDUCTANCE VALUE	INDUCTANCE TOLERANCE	PACKAGE CODE	JEDEC® LEAD (Pb)-FREE STANDARD

GLOBAL PART NUMBER

I F S C	3 2 3 2 D B	E R	1 0 0	M	0 1
PRODUCT FAMILY	SIZE	PACKAGE CODE	INDUCTANCE VALUE	INDUCTANCE TOLERANCE	SERIES
		ER = tape and reel	**100** = 10 µH	**M** = ± 20 % **N** = ± 30 %	

For technical questions, contact: magnetics@vishay.com

THIS DOCUMENT IS SUBJECT TO CHANGE WITHOUT NOTICE. THE PRODUCTS DESCRIBED HEREIN AND THIS DOCUMENT ARE SUBJECT TO SPECIFIC DISCLAIMERS, SET FORTH AT www.vishay.com/doc?91000

Disclaimer

ALL PRODUCT, PRODUCT SPECIFICATIONS AND DATA ARE SUBJECT TO CHANGE WITHOUT NOTICE TO IMPROVE RELIABILITY, FUNCTION OR DESIGN OR OTHERWISE.

Vishay Intertechnology, Inc., its affiliates, agents, and employees, and all persons acting on its or their behalf (collectively, “Vishay”), disclaim any and all liability for any errors, inaccuracies or incompleteness contained in any datasheet or in any other disclosure relating to any product.

Vishay makes no warranty, representation or guarantee regarding the suitability of the products for any particular purpose or the continuing production of any product. To the maximum extent permitted by applicable law, Vishay disclaims (i) any and all liability arising out of the application or use of any product, (ii) any and all liability, including without limitation special, consequential or incidental damages, and (iii) any and all implied warranties, including warranties of fitness for particular purpose, non-infringement and merchantability.

Statements regarding the suitability of products for certain types of applications are based on Vishay's knowledge of typical requirements that are often placed on Vishay products in generic applications. Such statements are not binding statements about the suitability of products for a particular application. It is the customer's responsibility to validate that a particular product with the properties described in the product specification is suitable for use in a particular application. Parameters provided in datasheets and / or specifications may vary in different applications and performance may vary over time. All operating parameters, including typical parameters, must be validated for each customer application by the customer's technical experts. Product specifications do not expand or otherwise modify Vishay's terms and conditions of purchase, including but not limited to the warranty expressed therein.

Hyperlinks included in this datasheet may direct users to third-party websites. These links are provided as a convenience and for informational purposes only. Inclusion of these hyperlinks does not constitute an endorsement or an approval by Vishay of any of the products, services or opinions of the corporation, organization or individual associated with the third-party website. Vishay disclaims any and all liability and bears no responsibility for the accuracy, legality or content of the third-party website or for that of subsequent links.

Vishay products are not designed for use in life-saving or life-sustaining applications or any application in which the failure of the Vishay product could result in personal injury or death unless specifically qualified in writing by Vishay. Customers using or selling Vishay products not expressly indicated for use in such applications do so at their own risk. Please contact authorized Vishay personnel to obtain written terms and conditions regarding products designed for such applications.

No license, express or implied, by estoppel or otherwise, to any intellectual property rights is granted by this document or by any conduct of Vishay. Product names and markings noted herein may be trademarks of their respective owners.

© 2026 VISHAY INTERTECHNOLOGY, INC. ALL RIGHTS RESERVED

THIS DOCUMENT IS SUBJECT TO CHANGE WITHOUT NOTICE. THE PRODUCTS DESCRIBED HEREIN AND THIS DOCUMENT ARE SUBJECT TO SPECIFIC DISCLAIMERS, SET FORTH AT www.vishay.com/doc?91000