Surface-Mount PoE Flyback Transformers - 6 W, 13 W, 30 W

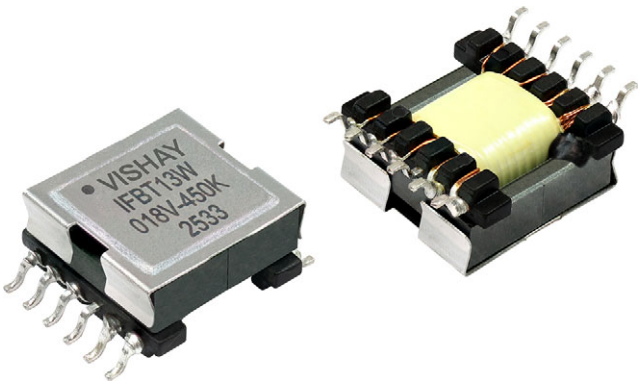

FEATURES

- Size: 22.0 mm x 17.5 mm x 9.1 mm and larger
- SMD flyback transformer design for power over ethernet (PoE) applications
- Power rating options for 6 W, 13 W, and 30 W
- Output voltage options from 1.8 V to 24 V
- Optimized operation at 26 V to 72 V input and 250 kHz frequency
- Operating voltage rating 250 V_{AC}
- Operating temperature range: -40 °C to 125 °C
- Customized turns ratio available
- Material categorization: for definitions of compliance please see www.vishay.com/doc?99912

Pb-free

RoHS COMPLIANT

LINKS TO ADDITIONAL RESOURCES

Product Page

MATERIAL SPECIFICATIONS

- Terminals: copper base with Ni/Sn electroplating
- Core: magnetic iron powder or ferrite
- Weight: 5.4 g (IFBT0709ZI), 12.5 g (IFBT0912AB)

APPLICATIONS

- Flyback transformers for 6 W and 30 W PoE applications
- LED lighting drivers
- General transformer

STANDARD ELECTRICAL SPECIFICATIONS

PART NUMBER	IND. ± 10 % (1) (µH)	L_k IND. (2) (µH)	DCR MAX. (Ω)			TURNS RATIO (3)		I_{pk} MAX. (4) (A)	OUTPUT (5) (V / A)
			PRI	SEC	AUX	PRI : SEC	PRI : AUX		
6 W POWER RATING									
IFBT0709ZIFS061R80	75.0	8.40	0.195	0.005	0.195	1 : 0.07	1 : 0.36	1.3	1.8 / 3.3
IFBT0709ZIFS062R50	55.0	4.80	0.112	0.005	0.150	1 : 0.08	1 : 0.33	1.2	2.5 / 2.4
IFBT0709ZIFS063R30	65.0	4.00	0.138	0.007	0.180	1 : 0.11	1 : 0.36	1.2	3.3 / 1.8
IFBT0709ZIFS065R00	60.0	2.45	0.130	0.009	0.165	1 : 0.15	1 : 0.35	1.1	5.0 / 1.2
IFBT0709ZIFS061200	50.0	0.86	0.095	0.017	0.150	1 : 0.35	1 : 0.35	1.1	12 / 0.5
13 W POWER RATING									
IFBT0709ZIFS131R80	45.0	8.00	0.195	0.005	0.195	1 : 0.07	1 : 0.36	2.3	1.8 / 7.2
IFBT0709ZIFS132R50	35.0	4.40	0.112	0.005	0.150	1 : 0.08	1 : 0.33	2.2	2.5 / 5.2
IFBT0709ZIFS133R30	40.0	3.50	0.138	0.007	0.180	1 : 0.11	1 : 0.36	2.2	3.3 / 3.9
IFBT0709ZIFS135R00	40.0	2.00	0.130	0.009	0.165	1 : 0.15	1 : 0.35	2.1	5.0 / 2.6
IFBT0709ZIFS131200	35.0	0.75	0.095	0.017	0.150	1 : 0.35	1 : 0.35	2.0	12 / 1.1
IFBT0709ZIFS132000	37.0	0.75	0.102	0.032	0.150	1 : 0.57	1 : 0.38	2.0	19.5 / 0.67
IFBT0709ZIFS132400	37.0	0.65	0.102	0.058	0.150	1 : 0.57	1 : 0.33	2.0	24 / 0.54

For technical questions, contact: magnetics@vishay.com

THIS DOCUMENT IS SUBJECT TO CHANGE WITHOUT NOTICE. THE PRODUCTS DESCRIBED HEREIN AND THIS DOCUMENT ARE SUBJECT TO SPECIFIC DISCLAIMERS, SET FORTH AT www.vishay.com/doc?91000

STANDARD ELECTRICAL SPECIFICATIONS

PART NUMBER	IND. ± 10 % (1) (µH)	L_k IND. (2) (µH)	DCR MAX. (Ω)			TURNS RATIO (3)		I_{pk} MAX. (4) (A)	OUTPUT (5) (V / A)
			PRI	SEC	AUX	PRI : SEC	PRI : AUX		
30 W POWER RATING									
IFBT0912ABFS303R30	42.0	3.15	0.072	0.003	0.235	1 : 0.095	1 : 0.33	2.6	3.3 / 9.0
IFBT0912ABFS305R00	42.0	1.70	0.071	0.006	0.240	1 : 0.14	1 : 0.33	2.6	5.0 / 6.0
IFBT0912ABFS301200	42.0	0.75	0.063	0.017	0.205	1 : 0.33	1 : 0.33	2.6	12 / 2.5
IFBT0912ABFS302000	42.0	0.60	0.062	0.038	0.205	1 : 0.56	1 : 0.33	2.6	19.5 / 1.5
IFBT0912ABFS302400	42.0	0.60	0.062	0.057	0.205	1 : 0.67	1 : 0.33	2.6	24 / 1.25

Notes

- All test data is referenced to 25 °C ambient
- Storage condition: -20 °C to +60 °C and < 60 % RH (on board); and +5 °C to +40 °C and < 60 % RH (in component packaging)
- Rated operating voltage = 250 V_{AC} (50 Hz / 60 Hz)
- Isolation voltage: 1500 V_{AC} / 60 s (PRI to SEC)
- Applying signals within the audio-frequency range may result in audible noise due to the magnetostrictive properties of the core material
- Moisture sensitivity level, MSL = 1

(1) Inductance measured with LCR meter 4584A or equivalent; test condition 250 kHz, 0.3 V_{RMS}

(2) Leakage inductance (typical) measured across primary winding with the secondary windings shorted

(3) Turns ratios are with the primary and secondary windings connected in parallel

(4) Maximum recommended operating current

(5) Output is connected in parallel; AUX winding output is 12 V, 20 mA

GLOBAL PART NUMBER

I F B T	0 7 0 9	Z I	F S	0 6	1 R 8	0
PRODUCT FAMILY	FOOTPRINT	HEIGHT	PACKAGING	POWER RATING	OUTPUT VOLTAGE	SERIES
	0709 = 0.7" x 0.9" **0912** = 0.9" x 1.2"	**ZI** = 9 mm **AB** = 12 mm	**FS** = tape and reel	**06** = 6 W **13** = 13 W **30** = 30 W	**1R8** = 1.8 V **2R5** = 2.5 V **3R3** = 3.3 V **5R0** = 5.0 V **120** = 12 V **200** = 19.5 V **240** = 24 V	

Note

- For additional packaging details see "Packaging Methods"

For technical questions, contact: magnetics@vishay.com

THIS DOCUMENT IS SUBJECT TO CHANGE WITHOUT NOTICE. THE PRODUCTS DESCRIBED HEREIN AND THIS DOCUMENT ARE SUBJECT TO SPECIFIC DISCLAIMERS, SET FORTH AT www.vishay.com/doc?91000

DIMENSIONS in inches [millimeters]

IFBT0709ZI

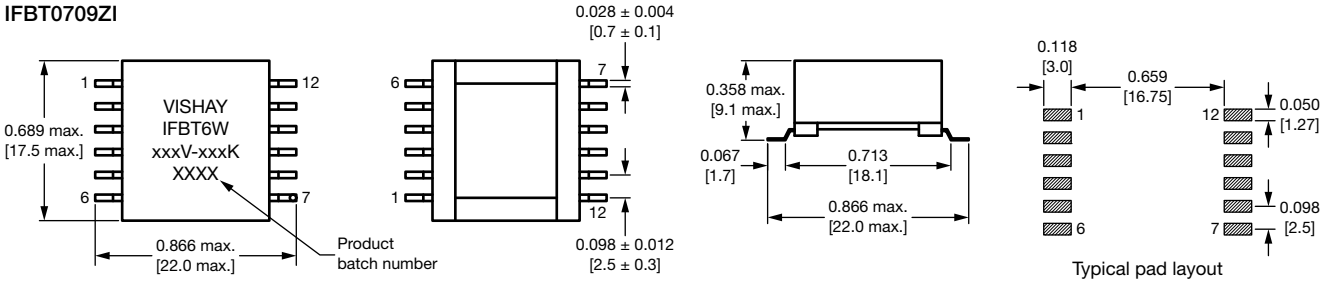

Typical pad layout

IFBT0912AB

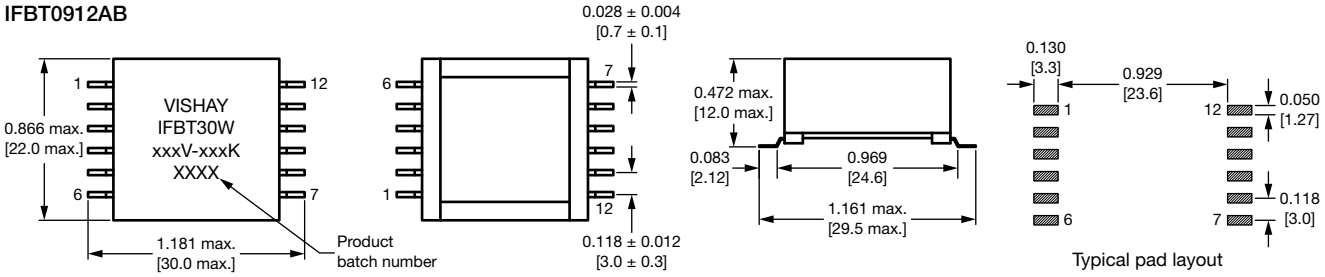

Typical pad layout

SCHEMATIC

IFBT0709ZI

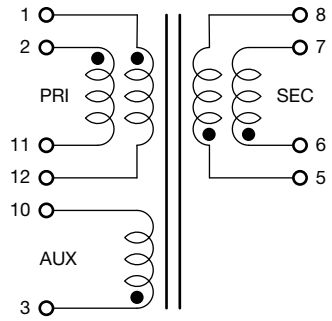

IFBT0912AB

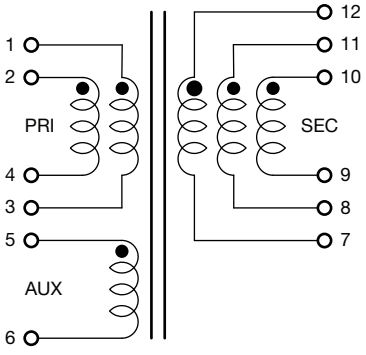

The primary windings and the secondary windings to be connected in parallel on the PC board.

For technical questions, contact: magnetics@vishay.com

THIS DOCUMENT IS SUBJECT TO CHANGE WITHOUT NOTICE. THE PRODUCTS DESCRIBED HEREIN AND THIS DOCUMENT ARE SUBJECT TO SPECIFIC DISCLAIMERS, SET FORTH AT www.vishay.com/doc?91000

Disclaimer

ALL PRODUCT, PRODUCT SPECIFICATIONS AND DATA ARE SUBJECT TO CHANGE WITHOUT NOTICE TO IMPROVE RELIABILITY, FUNCTION OR DESIGN OR OTHERWISE.

Vishay Intertechnology, Inc., its affiliates, agents, and employees, and all persons acting on its or their behalf (collectively, “Vishay”), disclaim any and all liability for any errors, inaccuracies or incompleteness contained in any datasheet or in any other disclosure relating to any product.

Vishay makes no warranty, representation or guarantee regarding the suitability of the products for any particular purpose or the continuing production of any product. To the maximum extent permitted by applicable law, Vishay disclaims (i) any and all liability arising out of the application or use of any product, (ii) any and all liability, including without limitation special, consequential or incidental damages, and (iii) any and all implied warranties, including warranties of fitness for particular purpose, non-infringement and merchantability.

Statements regarding the suitability of products for certain types of applications are based on Vishay's knowledge of typical requirements that are often placed on Vishay products in generic applications. Such statements are not binding statements about the suitability of products for a particular application. It is the customer's responsibility to validate that a particular product with the properties described in the product specification is suitable for use in a particular application. Parameters provided in datasheets and / or specifications may vary in different applications and performance may vary over time. All operating parameters, including typical parameters, must be validated for each customer application by the customer's technical experts. Product specifications do not expand or otherwise modify Vishay's terms and conditions of purchase, including but not limited to the warranty expressed therein.

Hyperlinks included in this datasheet may direct users to third-party websites. These links are provided as a convenience and for informational purposes only. Inclusion of these hyperlinks does not constitute an endorsement or an approval by Vishay of any of the products, services or opinions of the corporation, organization or individual associated with the third-party website. Vishay disclaims any and all liability and bears no responsibility for the accuracy, legality or content of the third-party website or for that of subsequent links.

Vishay products are not designed for use in life-saving or life-sustaining applications or any application in which the failure of the Vishay product could result in personal injury or death unless specifically qualified in writing by Vishay. Customers using or selling Vishay products not expressly indicated for use in such applications do so at their own risk. Please contact authorized Vishay personnel to obtain written terms and conditions regarding products designed for such applications.

No license, express or implied, by estoppel or otherwise, to any intellectual property rights is granted by this document or by any conduct of Vishay. Product names and markings noted herein may be trademarks of their respective owners.

© 2026 VISHAY INTERTECHNOLOGY, INC. ALL RIGHTS RESERVED

THIS DOCUMENT IS SUBJECT TO CHANGE WITHOUT NOTICE. THE PRODUCTS DESCRIBED HEREIN AND THIS DOCUMENT ARE SUBJECT TO SPECIFIC DISCLAIMERS, SET FORTH AT www.vishay.com/doc?91000