Ferrite Power Inductor, Drum Core



FEATURES

- 7.8 mm x 7.0 mm x 5.3 mm size
- Ferrite drum core construction, unshielded
- Inductance range 1 µH to 2200 µH
- Material categorization: for definitions of compliance please see www.vishay.com/doc?99912

Pb-free

RoHS COMPLIANT

HALOGEN FREE GREEN (5-2008)

LINKS TO ADDITIONAL RESOURCES

Product Page

APPLICATIONS

- DC/DC power supplies
- Noise suppression and filtering

STANDARD ELECTRICAL SPECIFICATIONS

PART NUMBER	L_0 INDUCTANCE (µH)	INDUCTANCE TOLERANCE (%)	DCR MAX. (mΩ)	HEAT RATING CURRENT DC TYP. (A) (1)
IDCP3020ER1R0M01	1	20	19	5.80
IDCP3020ER1R5M01	1.5	20	28	5.30
IDCP3020ER2R2M01	2.2	20	35	4.50
IDCP3020ER3R3M01	3.3	20	45	4.00
IDCP3020ER4R7M01	4.7	20	58	3.20
IDCP3020ER6R8M01	6.8	20	70	2.80
IDCP3020ER8R2M01	8.2	20	75	2.50
IDCP3020ER100M01	10	20	78	2.30
IDCP3020ER120M01	12	20	85	2.00
IDCP3020ER150M01	15	20	90	1.80
IDCP3020ER180M01	18	20	100	1.60
IDCP3020ER220M01	22	20	110	1.50
IDCP3020ER270M01	27	20	120	1.30
IDCP3020ER330M01	33	20	130	1.20
IDCP3020ER390M01	39	20	160	1.10
IDCP3020ER470M01	47	20	180	1.00
IDCP3020ER560M01	56	20	240	0.94
IDCP3020ER680M01	68	20	280	0.85
IDCP3020ER820M01	82	20	370	0.78
IDCP3020ER101M01	100	20	430	0.72
IDCP3020ER121M01	120	20	470	0.66
IDCP3020ER151M01	150	20	640	0.58
IDCP3020ER181M01	180	20	710	0.51
IDCP3020ER221M01	220	20	960	0.49
IDCP3020ER221K01	220	10	960	0.49
IDCP3020ER271M01	270	20	1110	0.42
IDCP3020ER331M01	330	20	1260	0.40
IDCP3020ER391M01	390	20	1770	0.36
IDCP3020ER471M01	470	20	1960	0.34
IDCP3020ER681K01	680	10	2400	0.31
IDCP3020ER821K01	820	10	2650	0.30
IDCP3020ER102K01	1000	10	3150	0.29
IDCP3020ER122K01	1200	10	4500	0.28
IDCP3020ER152K01	1500	10	5000	0.21
IDCP3020ER182K01	1800	10	6000	0.20
IDCP3020ER222K01	2200	10	6800	0.19

Notes

- All test data is referenced to 25 °C ambient
- Operating temperature is -40 °C to +105 °C
- Test condition: 100 kHz, 0.3 V for 8.2 µH and below, and 1 kHz, 0.3 V for 10 µH and above
- Storage condition: -40 °C to +105 °C (on board); and -10 °C to +40 °C and < 70 % RH (in component packaging)
- Resistance to solder heat: 255 °C for 10 s (2 times max. through reflow)

(1) DC current (A) that will cause an approximate ΔT of 40 °C or cause L_0 to drop by 25 %, whichever is lower

For technical questions, contact: magnetics@vishay.com

THIS DOCUMENT IS SUBJECT TO CHANGE WITHOUT NOTICE. THE PRODUCTS DESCRIBED HEREIN AND THIS DOCUMENT ARE SUBJECT TO SPECIFIC DISCLAIMERS, SET FORTH AT www.vishay.com/doc?91000

DIMENSIONS in inches [millimeters]

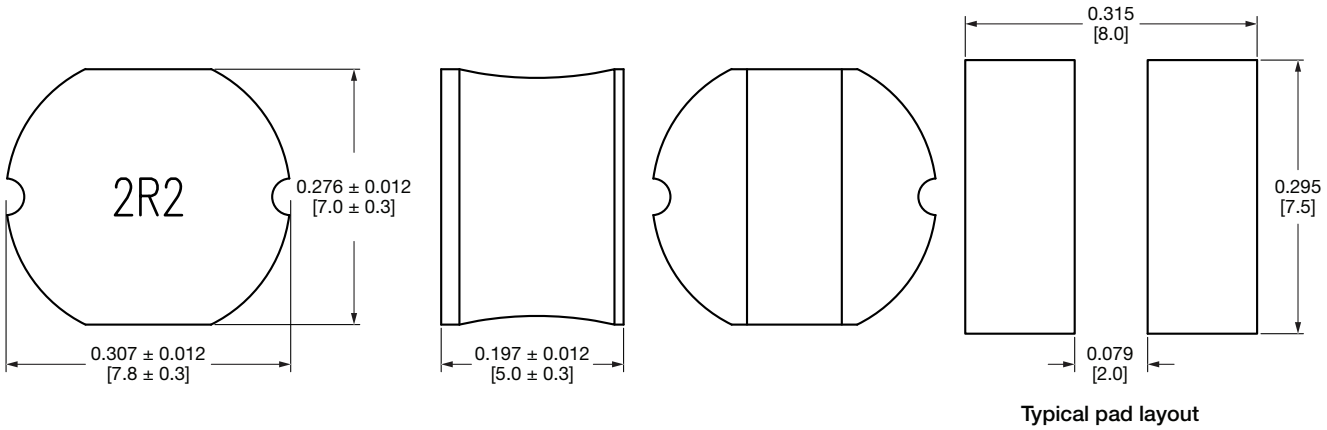

Typical pad layout

DESCRIPTION

IDCP3020-01	2.2 µH	± 20 %	ER	e3
MODEL	INDUCTANCE VALUE	INDUCTANCE TOLERANCE	PACKAGE CODE	JEDEC® LEAD (Pb)-FREE STANDARD

GLOBAL PART NUMBER

I D C P	3 0 2 0	E R	2 R 2	M	0 1
PRODUCT FAMILY	SIZE	PACKAGE CODE **ER** = tape and reel	INDUCTANCE VALUE **2R2** = 2.2 µH	INDUCTANCE TOLERANCE **M** = ± 20 % **N** = ± 30 %	SERIES

For technical questions, contact: magnetics@vishay.com

THIS DOCUMENT IS SUBJECT TO CHANGE WITHOUT NOTICE. THE PRODUCTS DESCRIBED HEREIN AND THIS DOCUMENT ARE SUBJECT TO SPECIFIC DISCLAIMERS, SET FORTH AT www.vishay.com/doc?91000

Disclaimer

ALL PRODUCT, PRODUCT SPECIFICATIONS AND DATA ARE SUBJECT TO CHANGE WITHOUT NOTICE TO IMPROVE RELIABILITY, FUNCTION OR DESIGN OR OTHERWISE.

Vishay Intertechnology, Inc., its affiliates, agents, and employees, and all persons acting on its or their behalf (collectively, “Vishay”), disclaim any and all liability for any errors, inaccuracies or incompleteness contained in any datasheet or in any other disclosure relating to any product.

Vishay makes no warranty, representation or guarantee regarding the suitability of the products for any particular purpose or the continuing production of any product. To the maximum extent permitted by applicable law, Vishay disclaims (i) any and all liability arising out of the application or use of any product, (ii) any and all liability, including without limitation special, consequential or incidental damages, and (iii) any and all implied warranties, including warranties of fitness for particular purpose, non-infringement and merchantability.

Statements regarding the suitability of products for certain types of applications are based on Vishay's knowledge of typical requirements that are often placed on Vishay products in generic applications. Such statements are not binding statements about the suitability of products for a particular application. It is the customer's responsibility to validate that a particular product with the properties described in the product specification is suitable for use in a particular application. Parameters provided in datasheets and / or specifications may vary in different applications and performance may vary over time. All operating parameters, including typical parameters, must be validated for each customer application by the customer's technical experts. Product specifications do not expand or otherwise modify Vishay's terms and conditions of purchase, including but not limited to the warranty expressed therein.

Hyperlinks included in this datasheet may direct users to third-party websites. These links are provided as a convenience and for informational purposes only. Inclusion of these hyperlinks does not constitute an endorsement or an approval by Vishay of any of the products, services or opinions of the corporation, organization or individual associated with the third-party website. Vishay disclaims any and all liability and bears no responsibility for the accuracy, legality or content of the third-party website or for that of subsequent links.

Vishay products are not designed for use in life-saving or life-sustaining applications or any application in which the failure of the Vishay product could result in personal injury or death unless specifically qualified in writing by Vishay. Customers using or selling Vishay products not expressly indicated for use in such applications do so at their own risk. Please contact authorized Vishay personnel to obtain written terms and conditions regarding products designed for such applications.

No license, express or implied, by estoppel or otherwise, to any intellectual property rights is granted by this document or by any conduct of Vishay. Product names and markings noted herein may be trademarks of their respective owners.

© 2026 VISHAY INTERTECHNOLOGY, INC. ALL RIGHTS RESERVED

THIS DOCUMENT IS SUBJECT TO CHANGE WITHOUT NOTICE. THE PRODUCTS DESCRIBED HEREIN AND THIS DOCUMENT ARE SUBJECT TO SPECIFIC DISCLAIMERS, SET FORTH AT www.vishay.com/doc?91000