ICT-15312 & ICT-15318 Datasheet

High Precision 3-Axis Electronic Magnetometer

ICT-15312 & ICT-15318 HIGHLIGHTS

The ICT-15312 & ICT-15318 are high precision 3-axis electronic magnetometer ICs with TMR sensor technology. They have magnetic sensors for detecting magnetic fields in the X-axis, Y-axis, and Z-axis, a sensor driving circuit, signal amplifier chain, and an arithmetic circuit for processing the signal from each sensor and serial interface in a small package with 4 external pins.

ICT-15312 supports 1.2V VDDIO and has I2C host interface. ICT-15318 supports 1.8V VDDIO and has I2C or I3C host interface options.

The TMR sensor technology used in these products ensures high accuracy, high sensitivity, low noise, and guaranteed design robustness for a wide range of positions, orientation applications and hardware form factors. Hardware-based reset coil mechanism greatly reduces and stabilizes offset shift in challenging external magnetic environments, while maintaining the lowest power consumption in the market.

FEATURES

- X/Y/Z output
  - Supported magnetic field +/-2.4mT
  - 16-bit resolution with 75nT/LSB
  - Calibrated output for high accuracy
  - Typical noise is 250nTrms for X and Y, 300nTrms for Z
  - Output data rate up to 320Hz
  - DRDY function for measurement data ready
  - Magnetic reset function to eliminate offset errors in TMR sensor
- I2C Host Interface (supported in ICT-15312 and ICT-15318)
  - Fast mode (< 400kHz) and Fast mode plus (<1MHz) supported
- I3C Host Interface (supported in ICT-15318)
  - Slave Device role
  - Single Data Rate (SDR) up to 12.5 MHz
  - Dynamic Addressing
  - In-Band Interrupt
  - Common Command Code (CCC) subset
  - Error Detection
- Operating supply voltage range
  - 1.8V +/- 10%
- Operating temperature range
  - −40°C to +85°C

APPLICATIONS

- Electronic Compass
- Position Sensing

BLOCK DIAGRAM

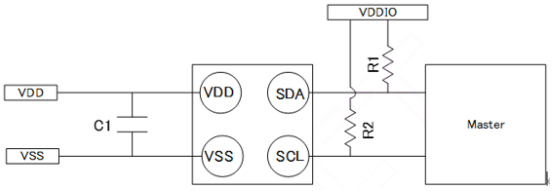

ORDERING INFORMATION

PART	TEMP RANGE	PACKAGE
ICT-15312	−40°C to +85°C	0.85 x 0.85mm 4-Pin WLCSP
ICT-15318		

RoHS and Green-Compliant Package

InvenSense Inc. reserves the right to change specifications and information herein without notice unless the product is in mass production and the datasheet has been designated by InvenSense in writing as subject to a specified Product / Process Change Notification Method regulation.

InvenSense, a TDK Group Company
1745 Technology Drive, San Jose, CA 95110 U.S.A
+1(408) 988–7339
invensense.tdk.com

Document Number: DS-000548
Revision: 1.0
Rev. Date: 03/12/2026

TABLE OF CONTENTS

ICT-15312 & ICT-15318 Highlights 1
Features 1
Applications 1
Block Diagram 1
Ordering Information 1
1. Features 6
2. Block Diagram And Functions 7
2.1. Block Diagram 7
2.2. Functional Blocks Description 7
3. Pin Configuration 8
4. Absolute Maximum Ratings 9
5. Specifications 9
5.1. Recommended Operating Conditions 9
5.2. Magnetic Characteristics 9
5.3. Power Supply Specification 9
5.4. Electrical Characteristics 10
5.5. Temperature Characteristics 10
5.5.1. Resolution 10
5.6. I2C Bus Interface 11
5.6.1. Clock Conditions 11
5.6.2. I2C Slave Address 11
5.6.3. I2C Timings 11
5.6.4. I2C IO DC Characteristics 12
6. Function Descriptions 13
6.1. Reset Functions 13
7. User Access Registers 14
7.1. Detail Descriptions Of Registers 14
8. Package Drawings 17
8.1. Package Laser Mark 17
9. Example Of External Connection 18
10. Use Case Example 19
10.1. Mode Change 19
10.1.1. Start Single-Shot Measurement 19
10.1.2. Go To Pulsed Mode 19
10.1.3. Go To Sleep 20
10.1.4. Go To MRM 20
10.2. Sensor Data Update Timing & Readout Timing 20
10.2.1. Single-Shot Mode 21
10.2.2. Pulsed Mode 21

Document Number: DS-000548
Revision: 1.0

10.2.3. Detecting Skipped Data 21
10.3. Sensor Data Register 22
10.4. Communication Interface 22
10.4.1. I2C 22
10.4.2. I3C 25
10.5. Soft reset 26
11. Label And Packing Information 27
11.1. Carrier Tape Design 27
11.2. Reel Design 27
11.3. Taping 28
11.4. Production Label 28
11.5. Packing 29
12. Reference 30
13. Revision History 31

TABLE OF FIGURES

Figure 1. Block Diagram 7
Figure 2. Package Pin Out 8
Figure 3. Package Output-Axis 8
Figure 4. I2C Timings 12
Figure 5. Reset Function 13
Figure 6. Package Drawings 17
Figure 7. Example Of External Connection 18
Figure 8. Mode Change 19
Figure 9. Voltage Levels 23

TABLE OF TABLES

Table 1. Pin Configuration 8
Table 2. Absolute Maximum Ratings 9
Table 3. Recommended Operating Conditions 9
Table 4. Magnetic Characteristics 9
Table 5. Power Supply Specification 10
Table 6. Electrical Characteristics 10
Table 7. Temperature Characteristics 10
Table 8. Resolution 10
Table 9. Clock Conditions 11
Table 10. I2C Slave Address 11
Table 11. I2C Timings 11
Table 12. ICT-15312 I2C IO DC Characteristics 12
Table 13. ICT-15318 I2C IO DC Characteristics 12
Table 14. User Access Registers 14
Table 15. C1 Requirement 18
Table 16. R1 and R2 Conditions 18

GENERAL DESCRIPTION

The ICT-15312 & ICT-15318 are high precision 3-axis electronic magnetometer IC's with TMR sensor technology. They have magnetic sensors for detecting magnetic fields in the X-axis, Y-axis, and Z-axis, a sensor driving circuit, signal amplifier chain, and an arithmetic circuit for processing the signal from each sensor and serial interface in a small package with 4 external pins.

The ICT-15312 & ICT-15318 are suitable for the following applications:

- Electronic Compass
- Position Sensing

1. FEATURES

- Functions
  - X/Y/Z output
    - Supported magnetic field +/-2.4mT
    - 16-bit resolution with 75nT/LSB
    - Calibrated output for high accuracy
    - Typical RMS noise is 250nTrms for X and Y, 300nTrms for Z
    - Selectable output data rate up to 320 Hz
    - DRDY function for measurement data ready
  - Magnetic reset function to eliminate offset errors in TMR sensor
  - Temperature output
- Serial Interface
  - I2C (supported in ICT-15312 and ICT-15318)
    - Fast mode (< 400kHz) and Fast mode plus (<1MHz) supported
  - I3C (supported in ICT-15318)
    - Slave Device role
    - Single Data Rate (SDR) up to 12.5 MHz
    - Dynamic Addressing
    - In-Band Interrupt
    - Common Command Code (CCC) subset
    - Error Detection
- Low power consumption
  - Sleep mode: 1.5µA (typ)
  - Output data rate 100Hz: 140µA (typ)
- Operating supply voltage range
  - 1.8V +/- 10%
- Operating temperature range
  - −40°C to +85°C
- Package
  - WLCSP with 4 pins
  - Size (Typ.)
    - 0.85(+/-0.03) mm x 0.85(+/-0.03) mm x 0.43mm(max)
  - RoHS compliant
  - MSL Rating 3

2. BLOCK DIAGRAM AND FUNCTIONS

2.1. BLOCK DIAGRAM

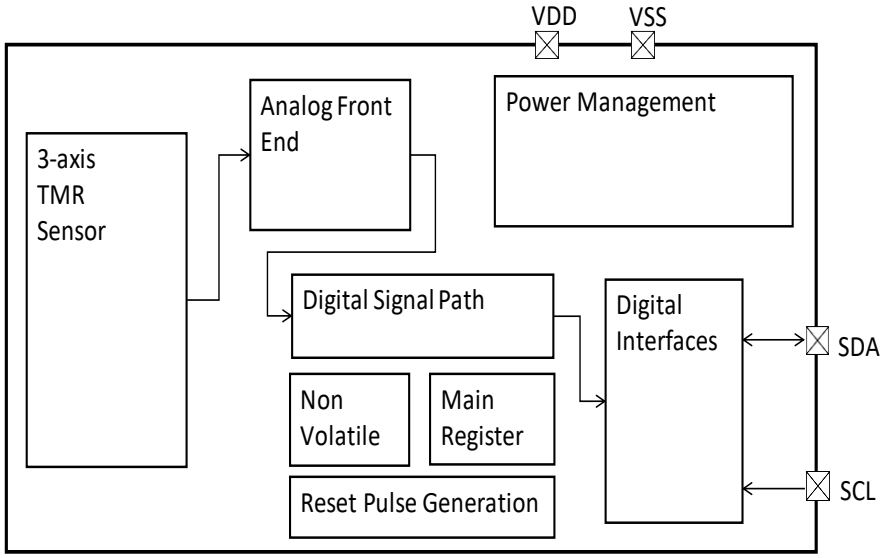

Figure 1. Block Diagram

2.2. FUNCTIONAL BLOCKS DESCRIPTION

- 3-axis TMR sensor
  - Voltage outputs in accordance with magnetic field on the sensor
  - Implemented coil for sensor reset function
- Power management
  - Derive voltage, current and clock references from VDD
- Analog front end
  - Translate the selected sensor output or temperature sensor signal in a digital bitstream
- Digital signal path
  - Decimation and compensation of the magnetic and temperature readouts
  - Data registers to be used as temporary storage of measurement results
- Non-volatile memory
  - Storage for calibration results, chip ID
- Main register
  - Register to read and/or write the product's measurement data, status, mode settings
- Digital interfaces
  - Serial interface to communicate to the product using I2C (ICT-15312 and ICT-15318) or I3C (ICT-15318)
- Reset pulse generation
  - Generate reset current pulse for the sensor coil

3. PIN CONFIGURATION

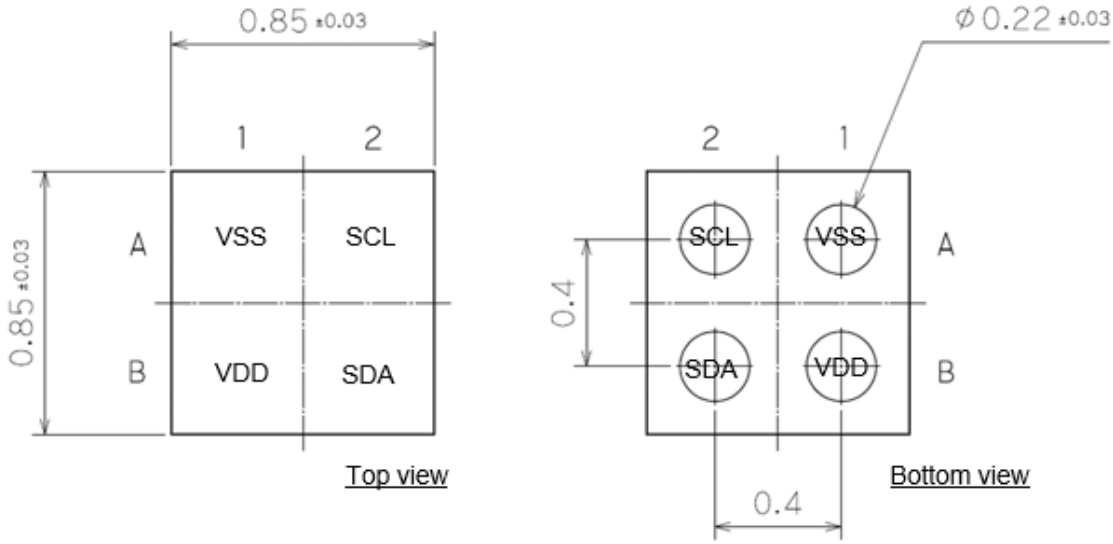

Figure 2. Package Pin Out

Pin No	Pin Name	I/O	Function
A1	VSS	-	Ground pin
A2	SCL	I	Control data clock input pin
B1	VDD	-	1.8V supply pin
B2	SDA	I/O	Control data input/output pin

Table 1. Pin Configuration

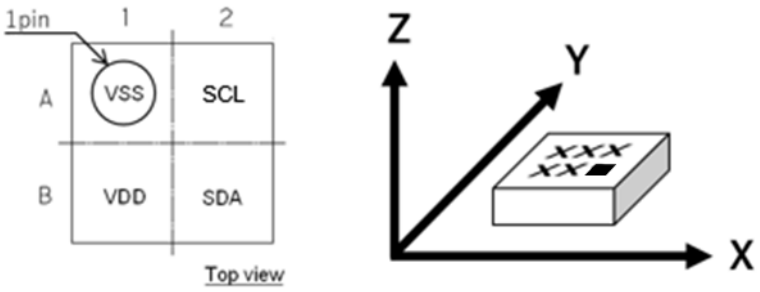

Figure 3. Package Output-Axis

Document Number: DS-000548
Revision: 1.0

4. ABSOLUTE MAXIMUM RATINGS

If the device is used in conditions exceeding the following values, the device may be destroyed. Normal operations are not guaranteed in such conditions.

Parameter	Symbol	Min	Max	Unit
Power supply	Vdd	-0.3	2.75	V
Input voltage (IO)	VIN	-0.3	2.75	V
Storage temperature	Tst	-40	85	°C
Magnetic field	MF		1000	mT

Table 2. Absolute Maximum Ratings

5. SPECIFICATIONS

5.1. RECOMMENDED OPERATING CONDITIONS

Parameter	Conditions Note	Min	Typ	Max	Unit
Supply voltage	Vdd	1.62	1.8	1.98	V
Interface voltage,1v8	Vddio 1.8V mode for I2C/I3C	1.62	1.8	Vdd	V
Interface voltage,1v2	Vddio 1.2V mode for I2C	1.08	1.2	1.32	V
Operating temperature range		-40		85	°C

Table 3. Recommended Operating Conditions

5.2. MAGNETIC CHARACTERISTICS

Parameter	Description	Min	Typ	Max	Unit
Resolution	Resolution of magnetometer data in X, Y and Z		16		bit
Sens, 2.4mT	Sensitivity of the magnetometer data in 2.4mT mode		75		nT/LSB
Range, 2.4mT	Input range in 2.4mT mode	-2.4		2.4	mT
Noise, 2.4mT	Noise in 2.4mT mode		X, Y: 250 Z: 300		nTrms
Offset shift over full range	Zero field offset shift over full range (after reset)	-2		2	µT
Measurement time for Pulsed mode				1/ODR	ms
Measurement time for Single shot mode			3.05	3.355	ms

Table 4. Magnetic Characteristics

5.3. POWER SUPPLY SPECIFICATION

Parameter	Conditions Note	Min	Typ	Max	Unit
vdd_por_active	VDD voltage for which the POR is active	1.19	1.31	1.47	V
vdd_por_release	VDD voltage for which the POR is released	1.25	1.37	1.53	V
Vhyst _vdd	Hysteresis voltage on the VDD POR threshold	50	60		mV
t_rise_vdd	VDD rise time from 10% to 90% of recommended operating range			3	ms
t_bootup	Boot up time including POR and OTP download from VDD on (>1.62V)			2	ms

Iddpk_power up	Peak current after VDD on (>1.62V) until boot is completed (t_bootup)			15	mA

Table 5. Power Supply Specification

5.4. ELECTRICAL CHARACTERISTICS

Parameter	Conditions Note	Min	Typ	Max	Unit
idd_sleep	Sleep mode current consumption		1.5	5.5	µA
idd_meas_320hz	Meas mode (ODR 320Hz)		400	625	µA
idd_meas_200hz	Meas mode (ODR 200Hz)		250	390	µA
idd_meas_100hz	Meas mode (ODR 100Hz)		140	210	µA
idd_meas_50hz	Meas mode (ODR 50Hz)		70	115	µA
idd_meas_20hz	Meas mode (ODR 20Hz)		35	60	µA
idd_meas_10hz	Meas mode (ODR 10Hz)		20	35	µA
idd_meas_5hz	Meas mode (ODR 5Hz)		13	25	µA
ODR accuracy	Accuracy of the output data rate	-10		10	%
Iddpk_meas	Peak current during MEAS from VDD			2.5	mA
Idd_MRM	Average Supply current consumption in MRM, Reset frequency =100Hz			100	µA

Table 6. Electrical Characteristics

**MRM stands for Magnetic Reset Mode*

5.5. TEMPERATURE CHARACTERISTICS

Parameter	Conditions Note	Min	Typ	Max	Unit
Temperature sensor sensitivity	-40°C to 85°C		6.25		m°C/LSB
Temperature sensor accuracy	-40°C to 85°C	-5		5	°C

Table 7. Temperature Characteristics

5.5.1. Resolution

The device has a filtered output and a raw output for temperature data. They bring different resolutions in temperature output. The resolution is also not the same in various modes.

Mode	Filter Setting	Resolution	Notes
Single-shot	Filtered	0.4°C	Initial setting
Single-shot	Raw	6.25m°C	Higher resolution but more noisy output than that of filtered
Pulsed	Filtered	0.1°C	Initial setting
Pulsed	Raw	6.25m°C	Higher resolution but more noisy output than that of filtered

Table 8. Resolution

The user can select “Raw” in accordance with the procedure in section 10.1.3.

5.6. I2C BUS INTERFACE

5.6.1. Clock Conditions

This product supports the maximum I2C bus speed listed in the following table, for various combinations of pull-up and load combinations in the system.

Cap Load(C_bus)	Pull Up Resistance		
	1kohm	2.2kohm	4kohm
50pF	Max 1MHz	Max 1MHz	Max 400KHz
90pF	Max 1MHz	Max 400KHz	Max 100KHz
150pF	Max 400KHz	Max 400KHz	Max 100KHz
200pF	Max 400KHz	Max 100KHz	Max 100KHz

Table 9. Clock Conditions

5.6.2. I2C Slave Address

The default slave address of the I2C interface is 7'b0011110 (0x1E).

Description	Address
Default	7'b0011110 (0x1E)

Table 10. I2C Slave Address

5.6.3. I2C Timings

		Standard Mode		Fast Mode		Fast Mode Plus		Unit
Symbol	**Parameter**	**min**	**max**	**min**	**max**	**min**	**max**	
fscl	SCL clock frequency		100		400		1000	KHz
tHIGH	SCL clock "High" time	4		0.6		0.26		µs
tLOW	SCL clock "Low" time	4.7		1.3		0.5		µs
tR	SDA and SCL rise time	600	1000	180	300	72	120	ns
tF	SDA and SCL fall time	6.5	106.5	6.5	106.5	6.5	81.5	ns
tHD:STA	Start condition hold time	4		0.6		0.26		µs
tSU:STA	Start condition setup time	4		0.6		0.26		µs
tHD:DAT	SDA hold time (vs. SCL falling edge)	0		0		0		µs
tSU:DAT	SDA setup time (vs. SCL rising edge)	250		100		50		ns
tSU:STO	Stop condition setup time	4		0.6		0.26		µs
tBUF	Bus free time	4.7		1.3		0.5		µs
tvd DAT	Data valid time	20	3450	20	900	20	450	ns
tvd ACK	Data valid acknowledge time	20	3450	20	900	20	450	ns

Table 11. I2C Timings

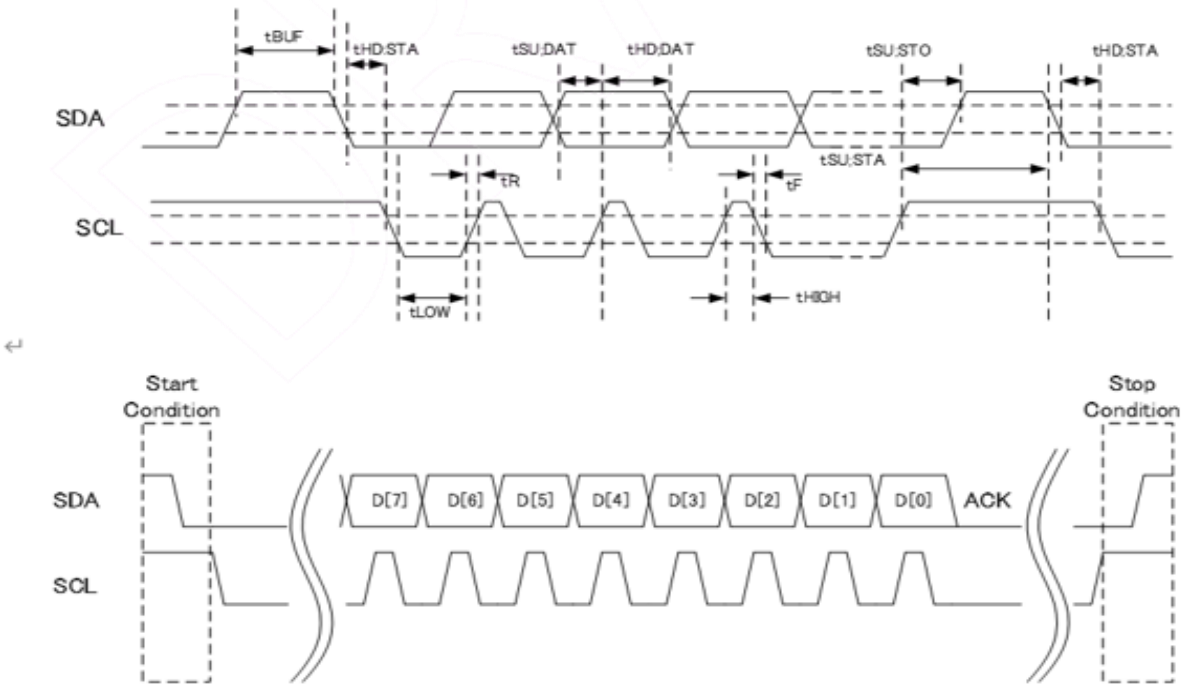

Figure 4. I2C Timings

5.6.4. I2C IO DC Characteristics

Symbol	Part Number	Description	Min	Typ	Max	Unit	Remark
vih_1v2	ICT-15312	High input level [% of VDD] for 1.2V VDDIO device (SCL and SDA)			80	%	VDDIO =1.2V
vil_1v2	ICT-15312	Low input level [% of VDD] for 1.2V VDDIO device (SCL and SDA)	27			%	VDDIO =1.2V
vhyst_1v2	ICT-15312	Input hysteresis [% of VDD] for 1.2V VDDIO device (SCL and SDA)	6.4			%	VDDIO =1.2V

Table 12. ICT-15312 I2C IO DC Characteristics

Symbol	Part Number	Description	Min	Typ	Max	Unit	Remark
vih	ICT-15318	High input level [% of VDD] for 1.8V VDDIO device (SCL and SDA)			67	%	VDDIO = 1.8V+/- 10%
vil	ICT-15318	Low input level [% of VDD] for 1.8V VDDIO device (SCL and SDA)	35			%	VDDIO = 1.8V+/- 10%
vhyst	ICT-15318	Input hysteresis [% of VDD] for 1.8V VDDIO device (SCL and SDA)	10			%	VDDIO = 1.8V +/- 10%

Table 13. ICT-15318 I2C IO DC Characteristics

6. FUNCTION DESCRIPTIONS

6.1. RESET FUNCTIONS

ICT-15312 & ICT-15318 have Power on Reset (POR) function. It works when Vdd reaches to vdd_por active on power-on sequence. After POR is completed, all registers are initialized and ICT-15312 & ICT-15318 transit to Sleep mode.

ICT-15312 & ICT-15318 have the following two types of resets:

- Power On Reset (POR)
  - When Vdd rise is detected, POR circuit operates, and ICT-15312 & ICT-15318 are reset.
- Soft reset
  - ICT-15312 & ICT-15318 are reset by register setting.

The following figure shows the sequence diagram for the reset functions.

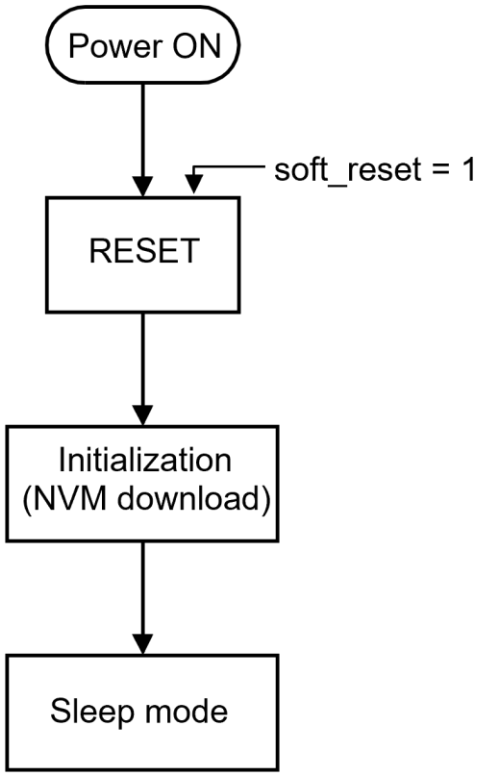

Figure 5. Reset Function

Document Number: DS-000548
Revision: 1.0

7. USER ACCESS REGISTERS

Address		Register Name	Descriptions	Access	Reset Value
0x00	0	manu_id	Manufacturer ID	Read Only	0xe7
0x01	1	chip_id	Chip ID	Read Only	0x45
0x03	3	chip_config	Chip configuration	Read/Write	0x00
0x04	4	mode_ctrl	Mode Control	Read/Write	0x00
0x05	5	mode_status	Mode Status	Read Only	0x00
0x06	6	status	Status Register	Read Only	0x00
0x07	7	frame_cnt	Frame Counter	Read Only	0x00
0x08	8	temp_data_lsb	Temperature LSB	Read Only	0x7f
0x09	9	temp_data_msb	Temperature MSB	Read Only	0x7f
0x0A	10	mag_data_x_lsb	Mag X axis LSB	Read Only	0x7f
0x0B	11	mag_data_x_msb	Mag X axis MSB	Read Only	0x7f
0x0C	12	mag_data_y_lsb	Mag Y axis LSB	Read Only	0x7f
0x0D	13	mag_data_y_msb	Mag Y axis MSB	Read Only	0x7f
0x0E	14	mag_data_z_lsb	Mag Z axis LSB	Read Only	0x7f
0x0F	15	mag_data_z_msb	Mag Z axis MSB	Read Only	0x7f
0x21	33	conf_calib	VDDIO mode	Read/Write	ICT-15312 0x58 ICT-15318 0x48
0x7C	124	sequencer_ctrl	Main sequencer control	Read/Write	0x00
0x7F	127	global_lock	Global lock/unlock register	Read/Write	0x00

Table 14. User Access Registers

7.1. DETAIL DESCRIPTIONS OF REGISTERS

chip_config@0x03

Bits	Name	Description	Binary Code	Description	Reset Value
7:4	Reserved	-	0000	-	0000
3	temp_sel	Temperature data selection	0	Use filtered temperature data	0
			1	Use raw temperature data	
2:0	Reserved	-	000	-	000

mode_ctrl @ 0x04

Bits	Name	Description	Binary Code	Description	Reset Value
7	Reserved	-	0	-	0
6:4	odr	ODR setting in PULSED mode	000	ODR 100Hz	000
			001	ODR 50Hz	
			010	ODR 20Hz	
			011	ODR 10Hz	
			100	ODR 5Hz	
			101	ODR 320Hz	
			110	ODR 200Hz	
3:2	Reserved	-	00	-	00
1:0	mode	Mode selection	00	SLEEP mode	00
			01	PULSED mode	
			10	SINGLE-SHOT mode (auto-cleared to 0 when the measurement is done)	
			11	MRM mode	

mode_status @ 0x05

Bits	Name	Description	Binary Code	Description	Reset Value
7:2	Reserved	-	000000	-	000000
1:0	status	Mode selection	00	SLEEP mode	00
			01	PULSED mode	
			10	SINGLE-SHOT mode	
			11	MRM mode	

status @ 0x06

Bits	Name	Description	Binary Code	Description	Reset Value
7:1	Reserved	-	0000000	-	0000000
0	data_ready	Data ready flag	0	No new set of data is available	0
			1	A new set of data is available	

frame_cnt @ 0x07

Bits	Name	Description	Binary Code	Description	Reset Value
7:3	Reserved	-	00000	-	00000
2:0	value	Frame counter value	000	A 3-bit frame counter is available to give a relative indication of which measurement period the data belongs to. It reads 0 for the first measurement data and increment every time a new data is available in the Data Register. After reaching its maximum value 111, it wraps around to 0. It is not reset in SLEEP state.	000
			001		
			-		
			111		

temp_data_lsb@0x08 temp_data_msb@0x09
mag_data_x_lsb@0x0A mag_data_x_msb@0x0B
mag_data_y_lsb@0x0C mag_data_y_msb@0x0D
mag_data_z_lsb@0x0E mag_data_z_msb@0x0F
Refer to Sensor Data register.

conf_calib.sys_cfg @ 0x21

Bits	Name	Description	Binary Code	Description	Reset Value
7	Reserved	-	0	-	0
6	sleep_en	SLEEP mode selection mirrored by shipment setting	0	Disable sleep mode	1
			1	Enable sleep mode	
5	i3c_ibi_dis	I3C In-Band Interrupt selection mirrored by shipment setting	0	Enable I3C In-Band Interrupt sources	0
			1	Disable I3C In-Band Interrupt sources	
4	vddio_1v2	VDDIO mode selection mirrored by shipment setting – user must not write to this bit, otherwise VDDIO behavior is not guaranteed	0	VDDIO 1.8V mode	0 for ICT-15318; 1 for ICT-15312
			1	VDDIO 1.2V mode	
3:2	i2c_pd_strength	I2C pull-down strength	00	Pull-down strength 2mA	10

Document Number: DS-000548
Revision: 1.0

		selection (typical value) mirrored by shipment setting	01	Pull-down strength 4mA	
			10	Pull-down strength 6mA	
			11	Pull-down strength 8mA	
1:0	Reserved	-	00	-	00

sequencer_ctrl @ 0x7C

Bits	Name	Description	Binary Code	Description	Reset Value
7	soft_reset	Software reset	1	All the registers shall be reset to their reset value	0
			0	Default value	
6:1	Reserved	-	0	-	0000000
0	ate_test_mode	Test mode	1	Go to test mode to unlock the protected register, conf_calib.sys_cfg @ 0x21	0
			0	Transition back to SLEEP	

global_lock @ 0x7F

Bits	Name	Description	Binary Code	Description	Reset Value
7:0	lock	This register protects some registers from being written	11001010 (0xCA)	Unlock the protected register sequencer_ctrl @ 0x7C	0000000
			00000000	Lock these protected registers	

Writing any other value locks these registers and resets this field to 0x00.

8. PACKAGE DRAWINGS

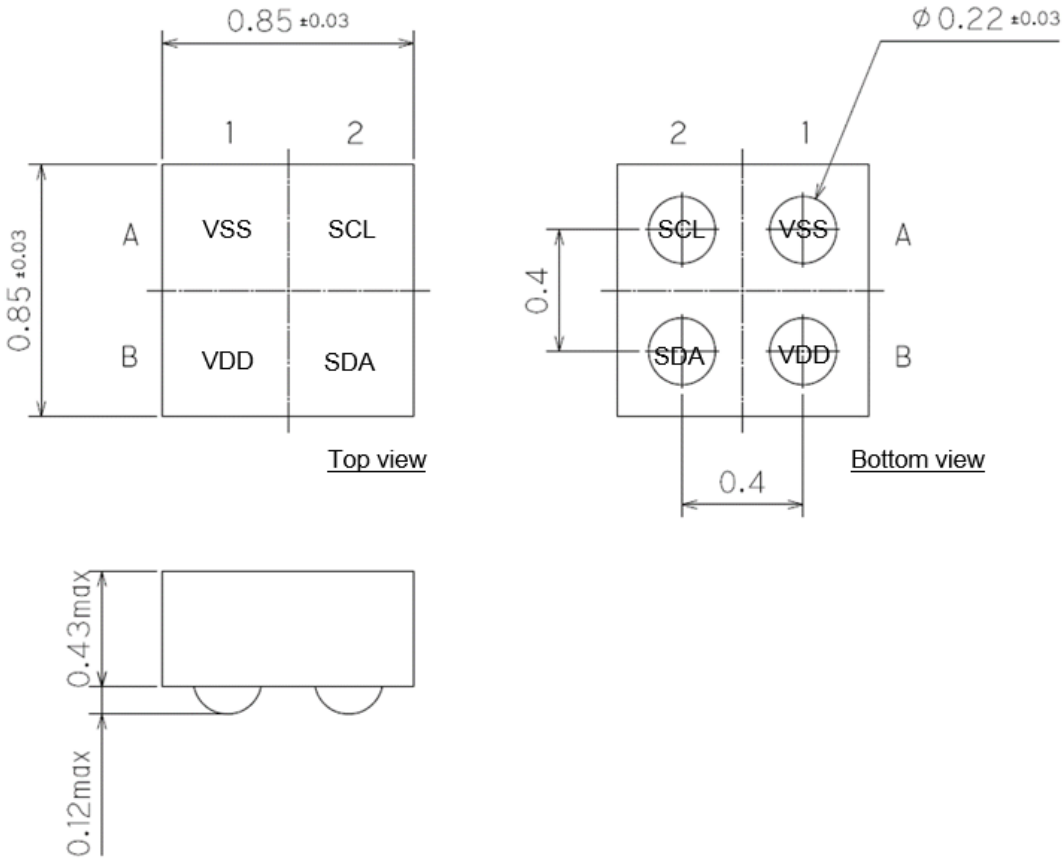

Figure 6. Package Drawings

8.1. PACKAGE LASER MARK

Top view

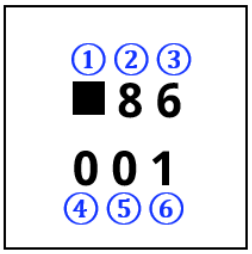

Marking (Row-1)	①	②	③
Description	**1A mark** ■ (square)	**Product code** 8: ICT15318 2: ICT15312	**Year code** 0~9
Marking (Row-2)	④	⑤	⑥
Description	**Lot code. digit-1** 0~J (except E,I)	**Lot code. digit-2** 0~J (except E,I)	**Lot code. digit-3** 0~J (except E,I)

Document Number: DS-000548
Revision: 1.0

9. EXAMPLE OF EXTERNAL CONNECTION

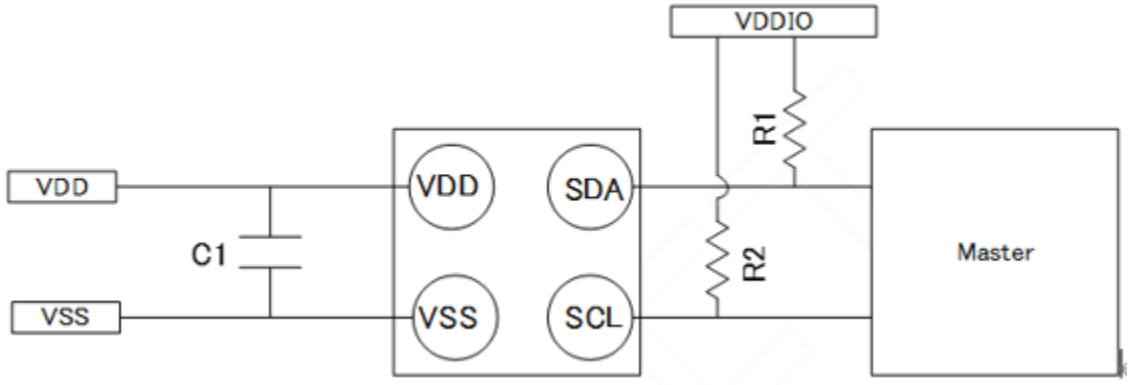

Figure 7. Example Of External Connection

C1 Requirement

Parameter	Description	Min	Typ	Max	Unit	Remark
C1	External capacitor between GND and VDD pins	1	2.2		µF	Minimum includes tolerance and derating
C1_esr	ESR of C1		250		mohm	

Table 15. C1 Requirement

R1 and R2 Condition as below for example

Cap Load(C_bus)	Pull Up Resistance		
	1kohm	2.2kohm	4kohm
50pF	Max 1MHz	Max 1MHz	Max 400KHz
90pF	Max 1MHz	Max 400KHz	Max 100KHz
150pF	Max 400KHz	Max 400KHz	Max 100KHz
200pF	Max 400KHz	Max 100KHz	Max 100KHz

Table 16. R1 and R2 Conditions

10. USE CASE EXAMPLE

10.1. MODE CHANGE

This section describes a set of commands which can be used to switch between operational modes.

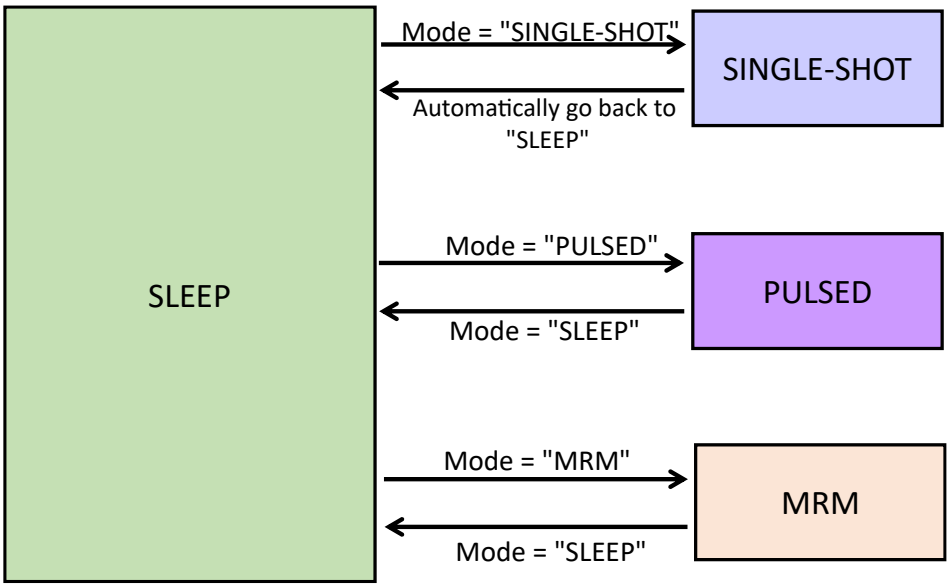

Figure 8. Mode Change

10.1.1. Start Single-Shot Measurement

A Single-Shot measurement can be started by executing the following command after the startup is completed. A Single-Shot measurement should always be started from the Sleep state.

Command	Register Name	Address	Value	Fields
WRITE	mode_ctrl	0x4 (only bit <1:0>)	N/A	odr = keep value mode = 10b

After the Single-Shot measurement, the ASIC will automatically transition back to Sleep.

10.1.2. Go To Pulsed Mode

The pulsed mode can be activated by executing the following command after the startup is completed. The ODR can be selected with bits <6:4> of the mode_ctrl register. Pulsed mode should always be activated from the Sleep State.

Command	Register Name	Address	Value	Fields
WRITE	mode_ctrl	0x4 (only bit<6:4> and <1:0>)	N/A	odr = selected value mode = 01b

10.1.3. Go To Sleep

The Sleep mode can be entered by using the following command. After the startup is completed, the ASIC will automatically transition to Sleep.

Command	Register Name	Address	Value	Fields
WRITE	mode_ctrl	0x04 (only bit <1:0>)	N/A	odr = keep value mode = 00b

The user can select the raw temperature output only in Sleep Mode.

Command	Register Name	Address	Value	Fields
WRITE	chip_config	0x03	0x08	temp_sel = 1

This setting will be kept until soft reset or power off.

10.1.4. Go To MRM

MRM enables magnetic reset of TMR sensor element with a pulsed current.

A Magnetic Reset current pulse can be triggered from the Sleep mode by using the following command after the startup is completed.

- Magnetic reset is required as soon as the magnetic field norm exceeds 2.4mT (i.e. $\sqrt{Bx^2 + By^2 + Bz^2} \geq$ 2.4mT) where Bx, By, Bz are magnetic field strength in Tesla along X, Y, Z axes
- Magnetic reset can only operate once magnetic field returns to suitable conditions. i.e. $\sqrt{Bx^2 + By^2 + Bz^2}$< 2.4mT and $\sqrt{Bx^2 + By^2}$ < 1.2mT in situ environmental magnetic field

The following procedure is needed to go to MRM and to go back to the Sleep mode,

1. The user writes the register to go to MRM.

Command	Register Name	Address	Value	Fields
WRITE	mode_ctrl	0x4 (only bit <1:0>)	N/A	odr = keep value mode = 11b

2. Wait 10 µsec from the end of the step 1 command.

3. The user writes the register to go to Sleep.

Command	Register Name	Address	Value	Fields
WRITE	mode_ctrl	0x4 (only bit <1:0>)	N/A	odr = keep value mode = 00b

Note: If the user stays in MRM mode, ICT-15312 & ICT-15318 consume a larger current than idd_sleep. If the user prefers a smaller current consumption, the user is recommended to go back to Sleep immediately, as seen in the procedure. MRM call timing: Call MRM at power on, Call MRM if FSR is exceeded Do not call MRM over +/-1.2mT in-situ environment (in section 1)

10.2. SENSOR DATA UPDATE TIMING & READOUT TIMING

In both Single-Shot and pulsed measurement modes, data is stored in the data registers (DATA_REG) at the end of the measurement state (MEAS), and at the same time the data_ready bit of the status register is set to '1'. Reading the last data register (mag_data_z_msb) clears the data_ready bit to '0'.

10.2.1. Single-Shot Mode

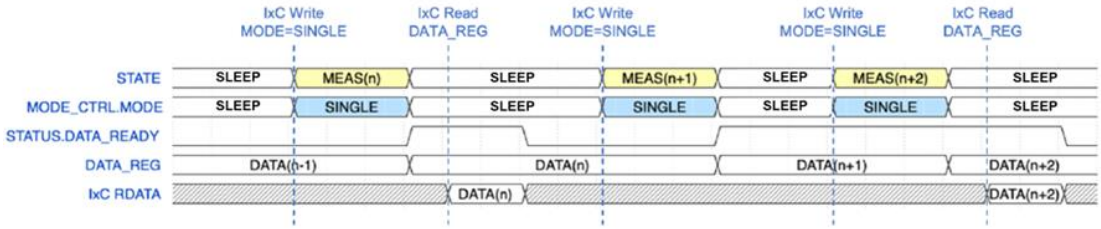

Note that the data registers always contain the last valid measurement data. It is therefore possible to read them while a new measurement is performed.

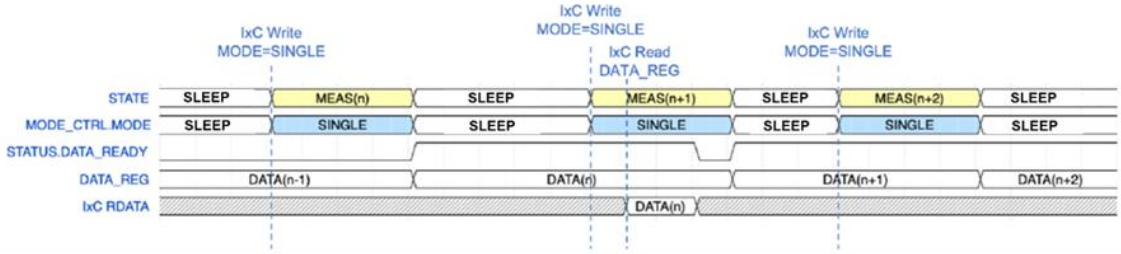

It should also be mentioned that if a new set of data becomes available while reading the frame_cnt register or the data registers, the data registers will not be updated until after the last register (mag_data_z_msb) has been read, to ensure data consistency. In that case data_ready will only be set to '1' when a new measurement is available, since reading the last register is the condition to clear data_ready.

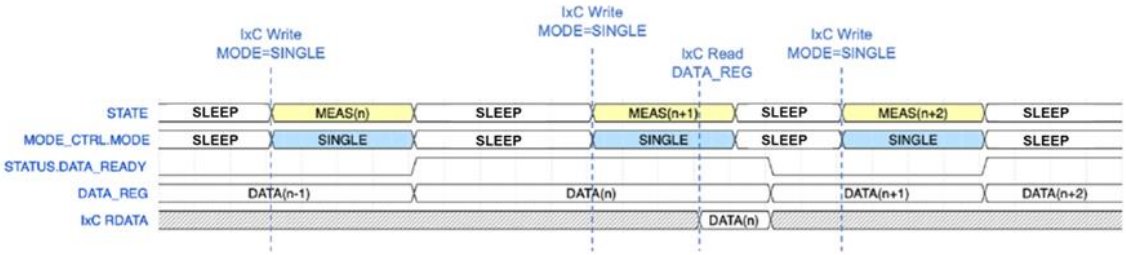

10.2.2. Pulsed Mode

Reading data in Pulsed mode works the same as in Single-Shot mode, with the same behavior when reading during measurements or new data becoming available while reading the data registers.

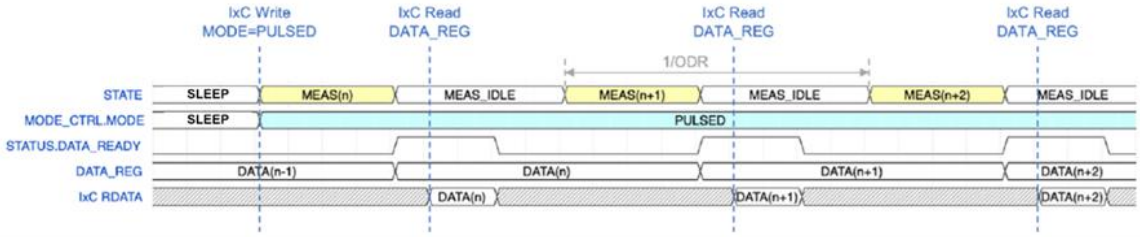

10.2.3. Detecting Skipped Data

It is possible to detect skipped data by reading the value of the frame_cnt register for each data set. The frame_cnt register is considered part of the data registers and hence is always consistent with the measurement data.

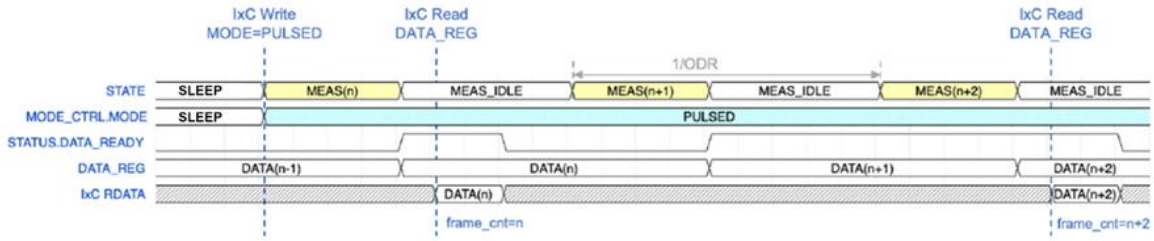

10.3. SENSOR DATA REGISTER

Sensor data refers to the following set of contiguous registers.
Sensor data is stored in two's complement and Little Endian format. The range of each parameter (temp_data, mag_data_x, mag_data_y, or mag_data_z) is -32768 to 32767 in 16-bit output.

Address	Register Name
0x08	temp_data_lsb
0x09	temp_data_msb
0x0A	mag_data_x_lsb
0x0B	mag_data_x_msb
0x0C	mag_data_y_lsb
0x0D	mag_data_y_msb
0x0E	mag_data_z_lsb
0x0F	mag_data_z_msb

The user calculates the measured temperature and magnetic field values using the following formulas.

- Temperature [°C] = temp_data x S_Temp/1000+25,with S_temp corresponding to"Temperature sensibility" spec.
- Magnetic field [uT] = mag_data x S_mag/1000, S_mag corresponding to"Sens, 2.4mT" spec.

10.4. COMMUNICATION INTERFACE

The ICT-15312 & ICT-15318 support I2C communication protocol. ICT-15318 also supports I3C communication.

10.4.1. I2C

10.4.1.1. START UP WITH I2C

By default, the ASIC will use I2C communication.

After device power-up, the host may receive NACK from ICT-153xx for the very first I2C transaction. The host should perform retry after the very first I2C transaction if it receives a NACK.

Here is an example procedure for this behavior.

- Power-Up the ICT-153xx
- The very first register read

Command	Register Name	Address	Expected Value	Fields
READ	manu_id	0x00	-	

The host receives NACK from the ICT-153xx.

- Retry

Command	Register Name	Address	Expected Value	Fields
READ	manu_id	0x00	0xE7	

10.4.1.2. VOLTAGE LEVELS

The ICT-15312 supports I2C at a bus supply level (VDDIO) of 1.2V; ICT-15318 supports I2C at a bus supply level (VDDIO) of 1.8V. The pull-up resistors R1 and R2 should always connect to the correct bus supply level.

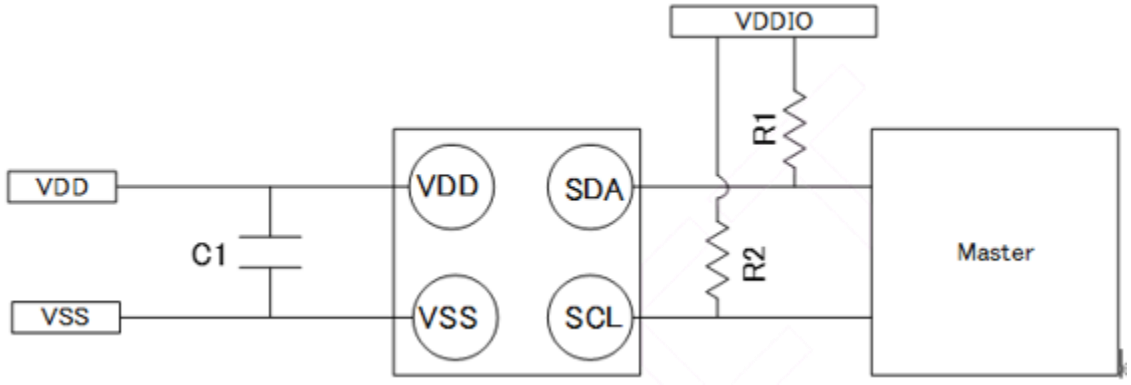

Figure 9. Voltage Levels

The bus supply should be equal to the main ASIC supply (VDD).

10.4.1.3. EXAMPLE OF I2C ACCESS

The figure shows how to readout Sensor data by using I2C register read.

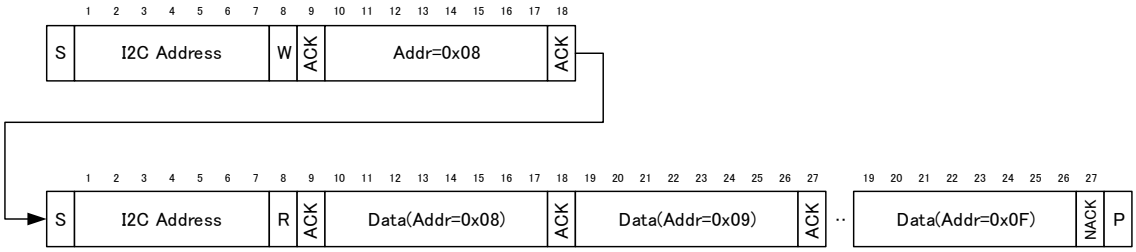

The figure shows how to go to single-shot mode by using I2C register write.

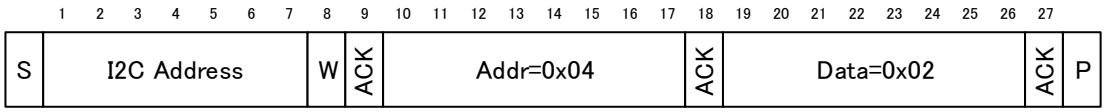

10.4.1.4. Pull Down Strength

The ICT-15312 and ICT-15318 can reduce I2C pull down strength from 6mA as a default setting. The following are the procedures to reduce I2C pull down strength for 2mA or 4mA.

1. Go to Sleep, as seen in 10.1.3

2. To enable to write conf_calib.sys_cfg register, the user unlocks the protection of this with the following command:

Command	Register name	Address	Value	Fields
WRITE	sequencer_ctrl	0x7C	0x01	soft_reset = 0b reserved = 000000b ate_test_mode =1b
WRITE	global_lock	0x7F	0xCA	-

3. The user writes the register value with the following command:

If the user needs pull down strength 2mA setting:

Command	Register name	Address	Value	Fields
WRITE	conf_calib.sys_cfg	0x21	0x40	reserved=0b sleep_en=1b i3c_ibi_dis=0b vddio_1v2=0b i2C_pd_strength=00b reserved=00b

If the user needs pull down strength 4mA setting:

Command	Register name	Address	Value	Fields
WRITE	conf_calib.sys_cfg	0x21	0x44	reserved=0b sleep_en=1b i3c_ibi_dis=0b vddio_1v2=0b i2C_pd_strength=01b reserved=00b

4. To enable to protect register, the user locks the protection of this with the following command:

Command	Register name	Address	Value	Fields
WRITE	sequencer_ctrl	0x7C	0x00	soft_reset = 0b reserved = 000000b ate_test_mode =0b
WRITE	global_lock	0x7F	0x00	-

10.4.2. I3C

The user can also use I3C communication on ICT-15318. I3C is a new 2-wire digital interface comprised of the signals serial data (SDA) and serial clock (SCL). I3C is intended to improve upon the I2C interface, while preserving backward compatibility.

ICT-15318 supports the following features of I3C slave interface complies with "MIPI I3C Specification -- public edition", Version 1.0, 23 December 2016.

- Slave Device role
- Single Data Rate (SDR) up to 12.5 MHz
- Dynamic Addressing
- In-Band Interrupt
- Common Command Code (CCC) subset
- Error Detection

The bus supply should be equal to VDD.

10.4.2.1. Common Command Code

I3C features CCC's which allow the master to manage the bus and its connected slaves, either direct or through a broadcast. The following table shows I3C Common Command Code (CCC) commands supported by ICT-15318.

Code	Type	Mnemonic	Description
0x00	broadcast	ENEC	Enable Events Command
0x01	broadcast	DISEC	Disable Events Command
0x06	broadcast	RSTDAA	Reset Dynamic Address Assignment
0x07	broadcast	ENTDAA	Enter Dynamic Address Assignment
0x80	direct	ENEC	Enable Events Command
0x81	direct	DISEC	Disable Events Command
0x86	direct	RSTDAA	Reset Dynamic Address Assignment (p2p)
0x87	direct	SETDASA	Set Dynamic Address from Static Address
0x88	direct	SETNEWDA	Set New Dynamic Address
0x8D	direct	GETPID	Get Provisional ID
0x8E	direct	GETBCR	Get Bus Characteristics Register
0x8F	direct	GETDCR	Get Device Characteristics Register
0x90	direct	GETSTATUS	Get Device Status

The master should not use any unsupported direct CCC.

10.4.2.2. Switchover from I2C to I3C

The default communication interfaces of the ICT-15312 and ICT-15318 after power-up is I2C. I3C mode can be entered in ICT-15318 at any time by assigning a Dynamic Address to the target using the 'Enter Dynamic Address Assignment' (ENTDAA) CCC (recommended). Alternatively, it is possible to use the SETDASA CCC to set a Dynamic Address using the I2C slave address.

10.4.2.3. In-Band Interrupt

When the user uses I3C communication, the ICT-15318 will trigger an I3C In-Band Interrupt (IBI) without payload every time a new set of measurement data is available in the data registers.

10.4.2.4. Switchover from I3C to I2C

The user shall do POR to switchover from I3C to I2C.

10.5. SOFT RESET

This section describes the commands to complete soft reset.

1. To enable to write soft_reset register, the user unlocks the protection of this with the following command:

Command	Register name	Address	Value	Fields
WRITE	global_lock	0x7F	0xCA	-

2. The user does soft reset with the following command:

Command	Register name	Address		Value	Fields
WRITE	sequencer_ctrl	0x7C	-	0x80	soft_reset=1b reserved=0000000b

3. To enable register protection, the user locks protection of with the following command:

Command	Register name	Address	Value	Fields
WRITE	global_lock	0x7F	0x00	-

11. LABEL AND PACKING INFORMATION

11.1. CARRIER TAPE DESIGN

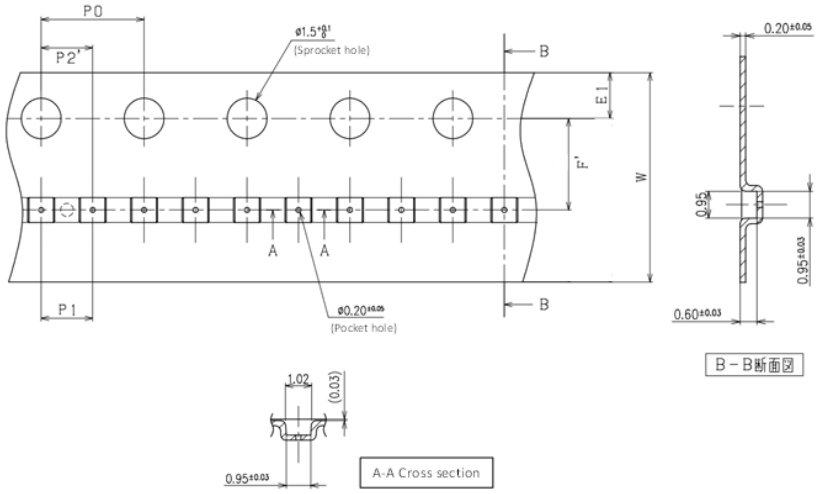

W	8.0+0.3/-0.1 mm
E1	1.75+/-0.1mm
F'	3.50+/-0.05mm
P0	4.00+/-0.05mm
P1	2.00+/-0.05mm
P2'	2.00+/-0.05mm

11.2. REEL DESIGN

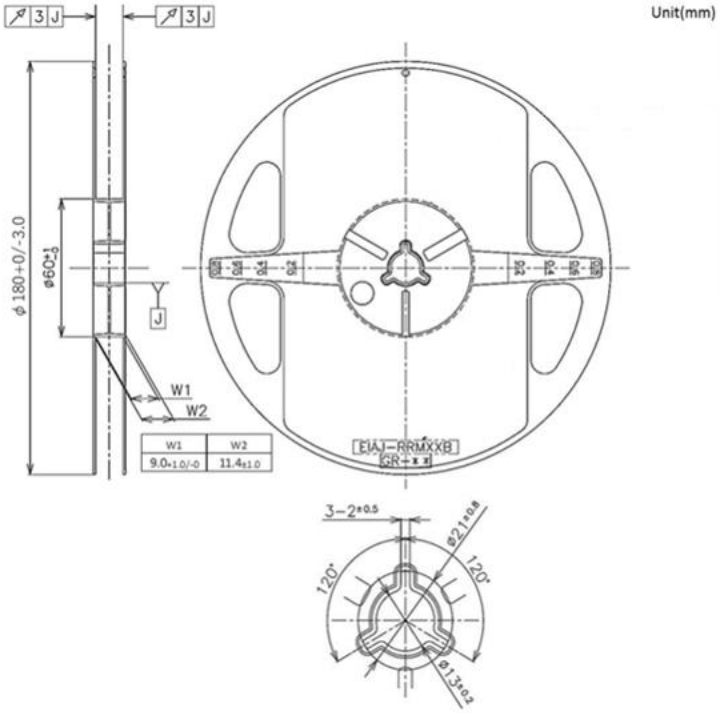

Document Number: DS-000548
Revision: 1.0

11.3. TAPING

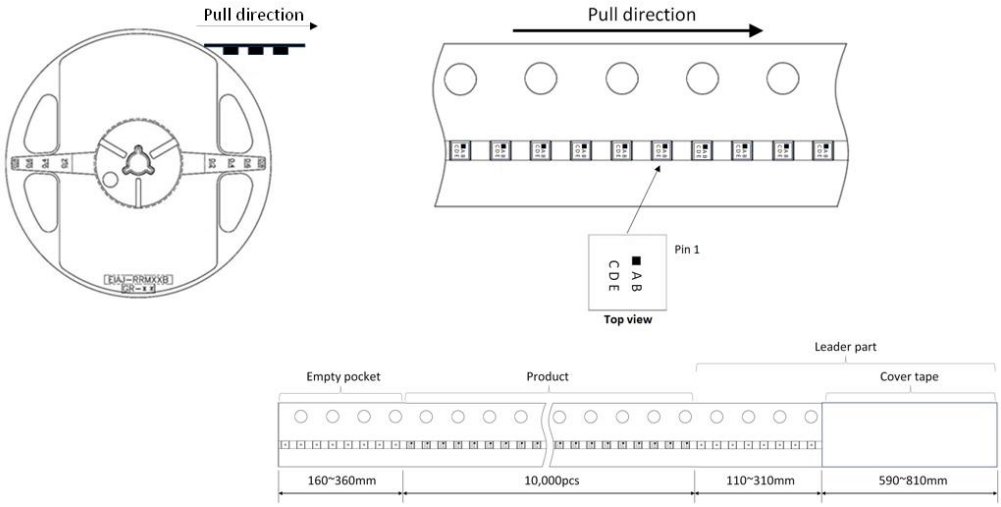

11.4. PRODUCTION LABEL

- Labels are attached on reel, bag & inner box

	Taping & Label attachment position	Label format
Tape & Reel	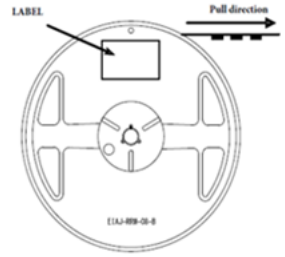	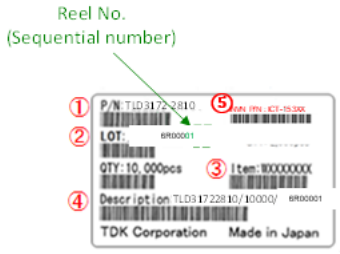

① P/N	② LOT	③ Item	④ Control number (for internal use)	⑤ INVN P/N
TLD3172-2X10	6R00001	W438B00X0	TLD31722810/10000/ 6R00001	ICT-1531X

①P/N ; TLD3172-2810 (for VDDIO1.8V) or TLD3172-2210 (for VDDIO1.2V)
②LOT ; Product year 1 digit + TDK lot serial No. : R or S or T or U + XXX + Reel serial No. (e.g. 6R00001 means Product year=2026 / TDK lot serial No.=R000 / Reel serial No.=01)
③Item ; TDK item code is W438B0040 (for VDDIO1.8V) or W438B0050 (for VDDIO1.2V)
⑤INVN P/N ; ICT-15318 (for VDDIO1.8V) or ICT 15312 (for VDDIO1.2V)

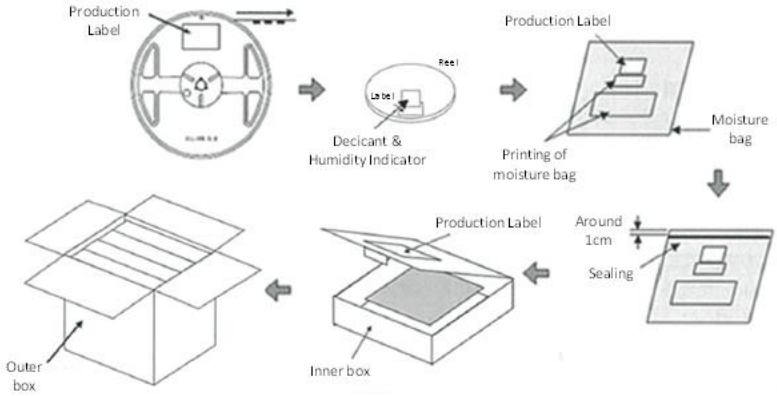

Inner box size ; 245 x 215 x 35mm (external)

Document Number: DS-000548
Revision: 1.0

11.5. PACKING

- A label format for outer box & storage method to outer box



Label for outer box (example)

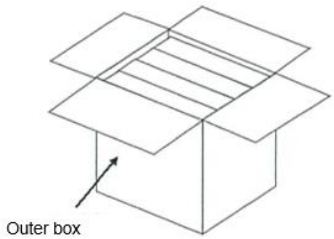

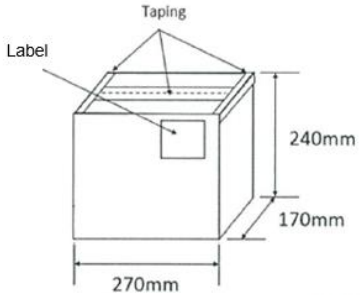

① P/N	② LOT	③ Item
"TLD3172-2810" for VDDIO1.8V "TLD3172-2210" for VDDIO1.2V	ADXN {"AD8N" for VDDIO 1.8V, "AD2N" for VDDIO 1.2V} + Last 2digits of shipment year + Shipment month {1~9, X(Oct.), Y(Nov.), Z(Dec.)} + Shipment date {1~9, A(10th)・・・V(31st)} + Sequence number in one day 2digits{01~99} Total 10 characters e.g.) AD8N24Y801 (VDDIO 1.8V and for 1st lot of 2024.Nov.08 shipment)	"W438B0040" for VDDIO1.8V "W438B0050" for VDDIO1.2V

④ Control Number	⑤ QR code (Model2)	⑥ INVN P/N
TLD31722810/40000/AD1N24Y801 AD8N24Y801 : 10characters of ② Lot	1S + AD8N24Y801 + 0001 + Q + 40000 AD8N24Y801 : 10characters of ② Lot Error correction level M, Cell 0.25x0.25mm	"ICT-15318" for VDDIO1.8V "ICT-15312" for VDDIO1.2V

Document Number: DS-000548
Revision: 1.0

12. REFERENCE

Please refer to the following application notes for additional information.

- TDK-InvenSense ICT-1531x Magnetometer Self-Test Procedure (AN-000494)

13. REVISION HISTORY

Revision Date	Revision	Description
09/12/2023	0.1	• Initial release
12/15/2023	0.2	• Added DRDY function (Section 1) • Added package output axis (Section 3), Figure 3 updated to show package output axis • Updated electrical characteristics (Section 5.4); updated Table 6 with 20Hz parameters • Added access column to Table 13 (Section 7) • Added I3C (Section 10.4.2) • Revised I3C only support ICT-15318 (Section 10.4.2)
08/21/2024	0.3	• Updated Noise specification (Cover Page, Sections 1 and 5.2); Updated Use Case Example (Section 10.1.4); Updated Safety Instruction Cautions
01/07/2025	0.4	• Updated Features (Cover Page, Section 1) • Updated Functional Blocks Description (Section 2.2) • Update Pin Configuration (Section 3) • Updated Storage Temperature (Section 4) • Added Magnetic field (Section 4) • Updated Electrical Characteristics (Section 5.4) • Added Temperature Characteristics Resolution (Section 5.5.1) • Updated I2C IO DC Characteristics (Section 5.6.4) • Updated User Access Registers (Section 7) • Added note that user must not write to bit 4 of register conf_calib.sys_cfg @ 0x21 (Section 7.1) • Updated Package Drawings (Section 8) • Updated Go To Sleep (Section 10.1.3) • Updated Go To MRM (Section 10.1.4) • Updated Sensor Data Register (Section 10.3) • Updated Communication Interface (Section 10.4) • Update Start Up With I2C (Section 10.4.1.1) • Added Reference (Section 11)
03/12/2026	1.0	• Updated Magnetic Reset information (Section 1) • Updated Noise specification (Cover Page, Sections 1 and 5.2) • Updated Package Drawings (Section 8) • Added Package Laser Mark (Section 8.1) • Added Interface Voltage (Section 5.1) • Added Label and Packing Information (Section 11)

CAUTIONS

Please read this before using this product.

SAFETY INSTRUCTION

Please design considering below safety instructions.

⚠ CAUTIONS

1 Working and storage condition must not be atmosphere with gas corrosion and so on (salt, acid, alkali and so on)
2 Pre-heat is necessary before soldering.
3 Soldering condition must be within conditions described in this specification.
If temperature is over the specification, it may cause short, characteristics change, shorter life and so on.
4 When assembling printed circuit board with chip to module, please design not to apply mechanical stress to chip.
5 Insurance storage term is 6 months after delivery under the conditions (Temperature: 25±4℃, Humidity: 40~65%RH)
If storage term is over 6 months, solderability may become worse.
6 When designing electrical circuit, please consider coil and magnet location.
It has possibility of malfunction by magnetic interference.
7 Recommend that operators wear a wrist band to connect GND to prevent products from ESD destroy.
8 Please do not close magnet or magnetic material.
9 Please do not use this product beyond conditions in this specification.
10 Wafer Level Package (WLP) expose the chip edge and it is not surrounded by protection such by mold compound, thus avoid manual handling as much as possible. If manual handling is needed, use soft material tip vacuum tweezer. Hard material tip tweezer, such metal tip tweezer handling possibly breaks the sample.
11 Application
The products listed on this catalog are intended for use in general electronic equipment (AV equipment, telecommunications equipment, home appliances, amusement equipment, computer equipment, personal equipment, office equipment, measurement equipment, industrial robots) under a normal operation and use condition. The products are not designed or warranted to meet the requirements of the applications listed below, whose performance and/or quality require a more stringent level of safety or reliability, or whose failure, malfunction or trouble could cause serious damage to society, person or property. If you intend to use the products in the applications listed below or if you have special requirements exceeding the range or conditions set forth in the each catalog, please contact us.

(1) Aerospace/Aviation equipment
(2) Medical equipment
(3) Power-generation control equipment
(4) Atomic energy-related equipment
(5) Seabed equipment
(6) Transportation equipment (cars, electric trains, ships, etc.)
(7) Military equipment
(8) Safety equipment
(9) Public information-processing equipment
(10) Other applications that are not considered general-purpose applications.

When designing your equipment even for general-purpose applications, you are kindly requested to take into consideration securing protection circuit/device or providing backup circuits in your equipment.

This information furnished by InvenSense or its affiliates (“TDK InvenSense”) is believed to be accurate and reliable. However, no responsibility is assumed by TDK InvenSense for its use, or for any infringements of patents or other rights of third parties that may result from its use. Specifications are subject to change without notice. TDK InvenSense reserves the right to make changes to this product, including its circuits and software, in order to improve its design and/or performance, without prior notice. TDK InvenSense makes no warranties, neither expressed nor implied, regarding the information and specifications contained in this document. TDK InvenSense assumes no responsibility for any claims or damages arising from information contained in this document, or from the use of products and services detailed therein. This includes, but is not limited to, claims or damages based on the infringement of patents, copyrights, mask work and/or other intellectual property rights.

Certain intellectual property owned by InvenSense and described in this document is patent protected. No license is granted by implication or otherwise under any patent or patent rights of InvenSense. This publication supersedes and replaces all information previously supplied. Trademarks that are registered trademarks are the property of their respective companies. TDK InvenSense sensors should not be used or sold in the development, storage, production or utilization of any conventional or mass-destructive weapons or for any other weapons or life threatening applications, as well as in any other life critical applications such as medical equipment, transportation, aerospace and nuclear instruments, undersea equipment, power plant equipment, disaster prevention and crime prevention equipment.

©2026 InvenSense. All rights reserved. InvenSense, MotionTracking, MotionProcessing, MotionProcessor, MotionFusion, MotionApps, DMP, AAR, and the InvenSense logo are trademarks of InvenSense, Inc. The TDK logo is a trademark of TDK Corporation. Other company and product names may be trademarks of the respective companies with which they are associated.



©2026 InvenSense. All rights reserved.