Linear LED Drivers with Single-Wire Digital Interface

FAN5622, FAN5624, FAN5626

Description

The FAN5622, FAN5624, and FAN5626 are two-, four-, and six-channel current-sink linear LED drivers used to backlight the main LCD displays or keypads in mobile electronics, such as cellular phone handsets.

A very low dropout of 50 mV allows driving LEDs without any inductors or switch capacitors. The brightness levels of the LED outputs are programmed through single-wire digital control interface. The user can program 32 linear dimming steps and turn on and off the LEDs through this interface by applying digital pulses.

The FAN562x family of linear LED drivers provides high efficiency due to the low drop-out voltage of the LED driver. Good matching between different channels of LED output is provided across the entire 32 dimming steps. These LED drivers also integrate short circuit, under-voltage, and thermal protection to ensure for a more robust solution.

The FAN5622, FAN5624, and FAN5626 are available in very small form-factor packages: 6-pin Super SOT23, 10-lead UMLP, and 10-lead MicroPak™ MLP, respectively.

Features

- Family of Three Linear Current-Sink LED Drivers that Support 2, 4, or 6 LED Outputs
- Current Sink Driver for Each LED Output:
  - 30 mA Maximum Output Current
  - 50 mV Drop-out at 15 mA I_{OUT}
  - Better than 3% Matching between Channels
  - External R_{SET}
- Single-Wire Digital Control Interface for Easy Programming
  - 32 Linear Steps of Dimming Control
- Less than 1 μA Shutdown Current
- Short-Circuit, Under-Voltage, and Thermal Protection
- Wide Input Voltage Range: 2.7 to 5.5 V
- Small Form-Factor Packages:
  - FAN5622: 6-Pin Super SOT23
  - FAN5624: 10-Lead 1.4x1.8x0.55 mm UMLP
  - FAN5626: 10-Lead 1.6x2.1x0.55 mm MicroPak MLP
- These are Pb-Free Devices

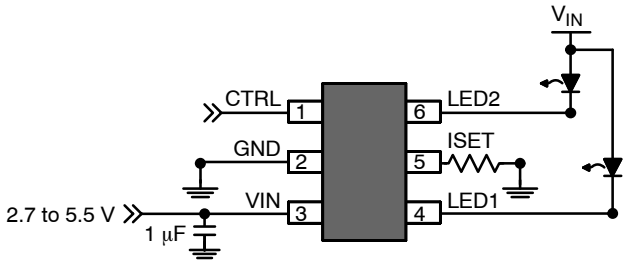

Figure 1. Typical Application of FAN5622

MARKING DIAGRAM



TSOT23 6-Lead
CASE 419BL

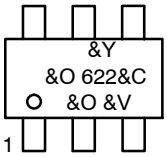



UQFN10 1.4x1.8, 0.4P
CASE 523BC

24&K
&2&Z



UQFN10 (MICROPAK), 1.6X2.1, 0.5P
CASE 523AZ

26&K
&2&Z

622, 24, 26	= Specific Device Code
&Y	= Binary Calendar Year Coding Scheme
&O	= Plant Code Identifier
&C	= Single Digit Die Run Code
&V	= Eight-Week Binary Datacoding Scheme
&K	= 2-Digits Lot Run Traceability Code
&2	= 2-Digit Date Code
&Z	= Assembly Plant Code

ORDERING INFORMATION

See detailed ordering and shipping information on page 9 of this data sheet.

NOTE: Some of the devices on this data sheet have been **DISCONTINUED**. Please refer to the table on page 9.

Applications

- Mobile Handsets
- Mobile Internet Devices
- PMP and MP3 Players
- LCD Modules

© Semiconductor Components Industries, LLC, 2010

APPLICATIONS DIAGRAMS

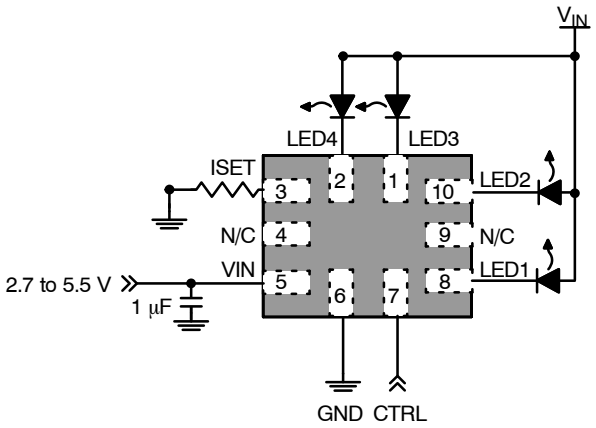

Figure 2. FAN5624 Typical Application for 4 LEDs

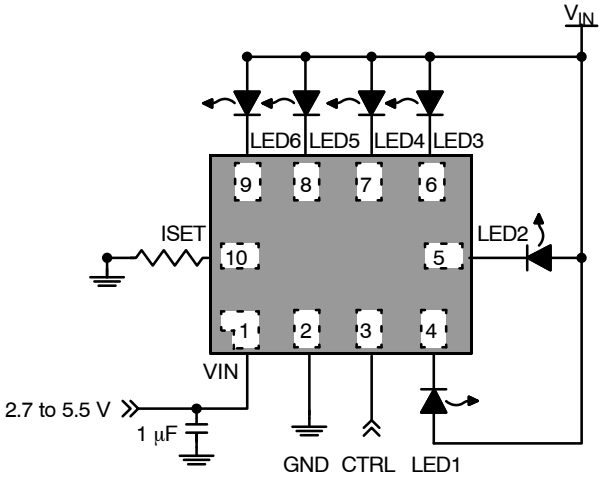

Figure 3. FAN5626 Typical Application for 6 LEDs

BLOCK DIAGRAM

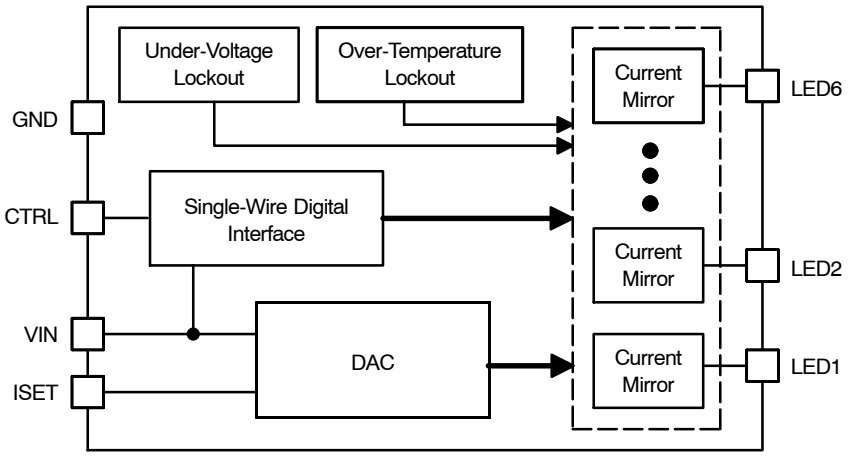

Figure 4. Block Diagram

Share Feedback
Your Opinion Matters

PIN CONFIGURATION

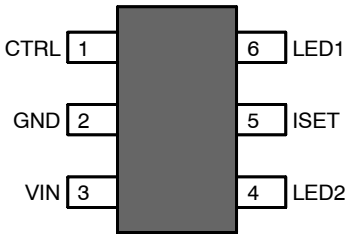

Figure 5. FAN5622: 6-Pin SSOT23, Top View

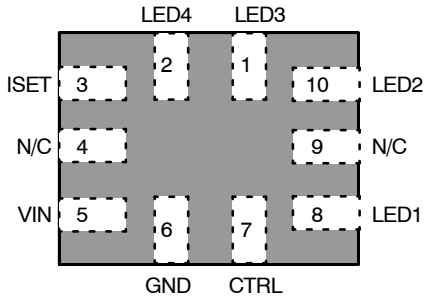

Figure 6. FAN5624: 10-Lead UMLP, Top View

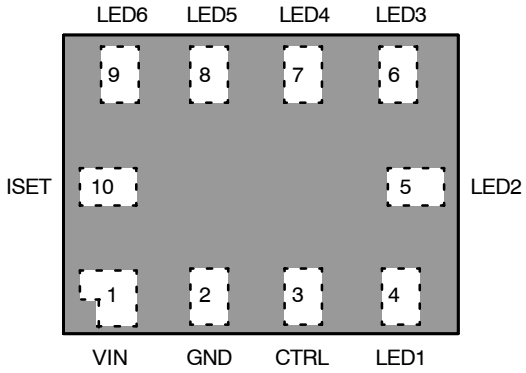

Figure 7. FAN5626: 10-Lead MicroPak MLP, Top View

PIN DEFINITIONS

Pin No.			Name	Description
FAN5622 SSOT23-6	FAN5624 UMLP10	FAN5626 MicroPak MLP10		
3	5	1	VIN	*Input Voltage*. Connect to 2.7 – 5.5 V_{DC} input power source.
2	6	2	GND	*Ground*
5	3	10	ISET	*LED Current Setting*. Full-scale LED current is set by tying this pin through a resistor (R_{SET}) to GND.
1	7	3	CTRL	*Control pin*. Program dimming levels by driving pin with digital pulses. Do not set the CNTL pin HIGH to LOW or toggle the CNTL pin when VIN is below minimum Recommended Operating Conditions. This pin cannot be left floating.
6	8	4	LED1	*LED Cathode #1*. LED current sink output. *Control pin*. Program dimming levels by driving pin with digital pulses (only when VIN is within its Recommended Operating Conditions). This pin cannot be left floating.
4	10	5	LED2	*LED Cathode #2*. LED current sink output.
	1	6	LED3	*LED Cathode #3*. LED current sink output.
	2	7	LED4	*LED Cathode #4*. LED current sink output.
		8	LED5	*LED Cathode #5*. LED current sink output.
		9	LED6	*LED Cathode #6*. LED current sink output.
	4, 9		N/C	*No Connect*

Share Feedback
Your Opinion Matters

ABSOLUTE MAXIMUM RATINGS

Symbol	Parameter		Min	Max	Unit
V_{CC}	VIN Pin		−0.3	6.0	V
	Other Pins (Note 1)		−0.3	V_{IN} + 0.3	V
ESD	Electrostatic Discharge Protection Level	Human Body Model per JESD22-A114	3.0		kV
		Charged Device Model per JESD22-C101	1.5		kV
T_J	Junction Temperature		−40	+150	°C
T_{STG}	Storage Temperature		−65	+150	°C
T_L	Lead Soldering Temperature, 10 Seconds		−	+260	°C

Stresses exceeding those listed in the Maximum Ratings table may damage the device. If any of these limits are exceeded, device functionality should not be assumed, damage may occur and reliability may be affected.

1. Lesser of 6.0 V or V_{IN} + 0.3 V.

RECOMMENDED OPERATING CONDITIONS

Symbol	Parameter	Min	Max	Unit
V_{IN}	Power Supply Voltage Range (Note 2)	2.7	5.5	V
T_A	Operating Ambient Temperature Range	−40	+85	°C
T_J	Operating Junction Temperature Range	−40	+125	°C
$I_{LED(FS)}$	Full-Scale LED Current	5	30	mA

Functional operation above the stresses listed in the Recommended Operating Ranges is not implied. Extended exposure to stresses beyond the Recommended Operating Ranges limits may affect device reliability.

2. Do not set the CNTL pin HIGH to LOW or toggle the CNTL pin when VIN is below minimum Recommended Operating Conditions.

THERMAL PROPERTIES (Junction-to-ambient thermal resistance is a function of application and board layout. This data is measured with boards in accordance to JEDEC standard JESD51. Special attention must be paid not to exceed junction temperature $T_{J(max)}$ at a given ambient temperature T_A.)

Symbol	Parameter	Typical	Unit
θ_{JA}	Junction-to-Ambient Thermal Resistance, SSOT23-6 Package	235	°C/W
	Junction-to-Ambient Thermal Resistance, UMLP10 Package (Note 3)	287	°C/W
	Junction-to-Ambient Thermal Resistance, MicroPak MLP10 package (Note 4)	220	°C/W

3. Recommended not to exceed 132 mW of maximum power dissipation.
4. Recommended not to exceed 198 mW of maximum power dissipation.

Share Feedback
Your Opinion Matters

ELECTRICAL SPECIFICATIONS (V_{IN} = 2.7 V to 5.5 V, R_{SET} = 19.10 kΩ, T_A = −40 °C to +85 °C, V_f = 2.5 V to [3.5 V or V_{IN} − 0.1 V], whichever is smaller. Typical values are at T_A = 25 °C, V_{IN} = 3.6 V, and V_f = 3.2 V.)

Symbol	Parameter	Condition	Min	Typ	Max	Unit
POWER SUPPLIES						
I_{SD}	Shutdown Supply Current	V_{IN} = 3.6 V, CTRL = 0	–	0.3	1.0	μA
I_{IN}	Operating Supply Current	FAN5622: V_{IN} = 3.6 V, I_{LED} = 0 mA	–	0.4	0.8	mA
		FAN5624: V_{IN} = 3.6 V, I_{LED} = 0 mA	–	0.6	1.0	mA
		FAN5626: V_{IN} = 3.6 V, I_{LED} = 0 mA	–	0.8	1.2	mA
I_{IH}	Control Pin Input Current	CTRL = 1.8 V	–	1	250	nA
V_{UVLO}	Under-Voltage Lockout Threshold	V_{IN} Rising	–	2.50	2.70	V
		V_{IN} Falling	2.10	2.30	2.50	V
REGULATION						
I_{FS_LEDx} (MAX)	Full-Scale LED Output Current	I_{LEDx} = 30 mA; x = 1 to 6	5	–	30	mA
I_{LED}	Absolute Current Accuracy	V_{IN} = 2.85 V – 4.5 V; V_{CATH} = 0.15 to (1.2 V or V_{IN} = 2.55 V, Whichever is Smaller); Full-Scale Current 5 – 30 mA, T_A = 25 °C	−10	–	+10	%
$I_{LED\ MATCH}$	LED Current Matching (Note 5)	I_{LEDx} = 15 mA; V_LEDx = 0.4 V, T_A = 25 °C	−3	–	+3	%
V_{ISET}	I_{SET} Drive Voltage	9.53 kΩ ≤ R_{SET} ≤ 56.2 kΩ	–	1.20	–	V
I_{RATIO}	Current Mirror Ratio from ISET Pin	9.53 kΩ ≤ R_{SET} ≤ 56.2 kΩ	–	240	–	
ΔI_{OUT_LOAD}	I_{OUT} Load Regulation	V_{IN} = 3.6 V, I_{LEDx} = 15 mA, LED V_F = 2.7 to 3.5 V	−3	–	+3	%
ΔI_{OUT_LINE}	I_{OUT} Line Regulation	V_{IN} = 2.7 to 4.8 V, I_{LEDx} = 15 mA, V_{CATH} = 0.5 V	−4	–	+4	%
$V_{DROPOUT}$	Dropout Voltage	V_{IN} = 3.6 V; I_{LED} = 15 mA, −10% I_{LED} Drop	–	50	–	mV
		V_{IN} = 3.6 V; I_{LED} = 30 mA, −10% I_{LED} Drop	–	60	–	
TSD	Thermal Shutdown	Rising Temperature at Junction	–	150	–	°C
		Hysteresis	–	20	–	
LOGIC INPUT (CTRL)						
V_{IH}	HIGH-Level Input Voltage		1.2	–	–	V
V_{IL}	LOW-Level Input Voltage		–	–	0.4	V
T_{LO}	CTRL LOW Time for Dimming	V_{IN} = 3.6 V; *See Figure 17*	0.5	–	300	μs
T_{HI}	Time Delay between Steps	V_{IN} = 3.6 V; *See Figure 17*	0.5	–	–	μs
T_{ON}	CTRL HIGH to Turn-On Delay	V_{IN} = 3.6 V; *See Figure 17*	–	250	–	μs
T_{SD}	CTRL LOW, Shutdown Pulse Width	V_{IN} = 3.6 V; from Falling Edge of CTRL	1	–	–	ms

Product parametric performance is indicated in the Electrical Characteristics for the listed test conditions, unless otherwise noted. Product performance may not be indicated by the Electrical Characteristics if operated under different conditions.

5. For the two, four, and six LED current sinks of FAN5622, FAN5624, and FAN5626 respectively; the following are determined: the maximum sink current of the two, four, and six LED outputs (MAX); the minimum sink current of the two, four, and six outputs (MIN); and the average sink current (AVG). For all of the LED outputs, two matching numbers are calculated: (MAX – AVG) / AVG and (AVG – MIN) / AVG. The largest number of the two (worst case) is considered the matching figure for the part. The matching figure for a given part is considered to be the highest matching figure of all LED outputs. The typical specification provided is the most likely norm of the matching figure for all parts.

Share Feedback
Your Opinion Matters

TYPICAL PERFORMANCE CHARACTERISTICS

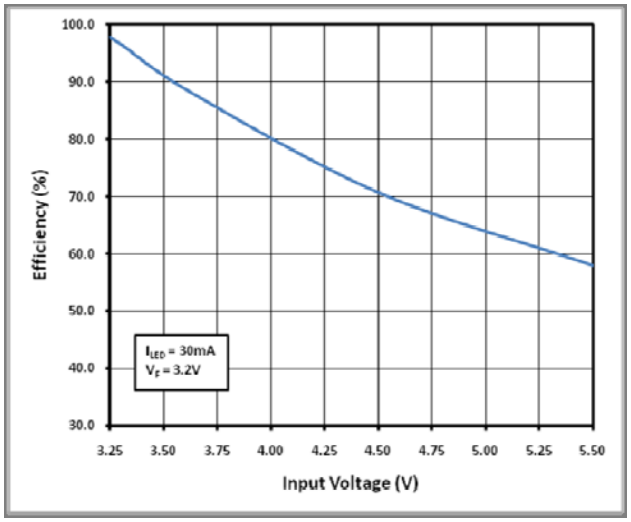

Figure 8. Efficiency vs. Input Voltage where LED V_F = 3.2 V

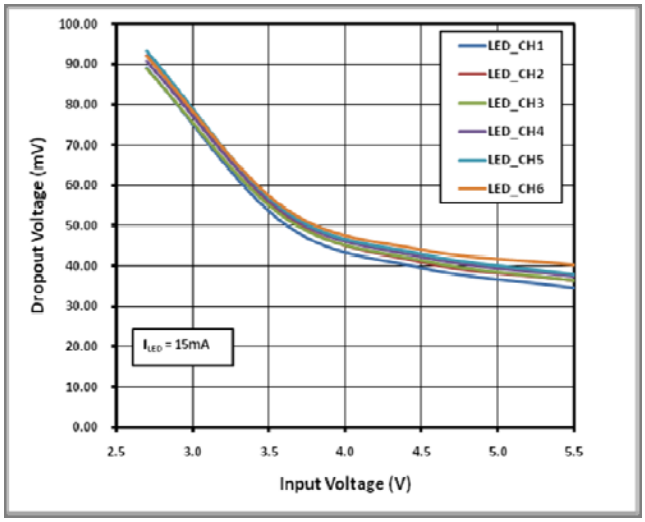

Figure 9. Dropout Voltage vs. Input Voltage

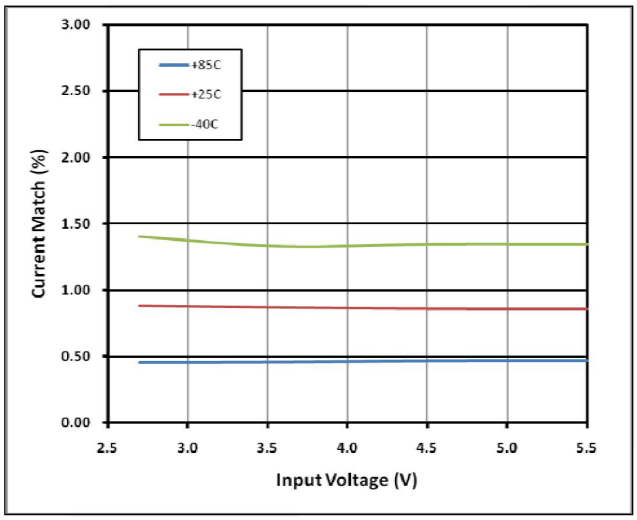

Figure 10. Current Match of Channels vs. Input Voltage

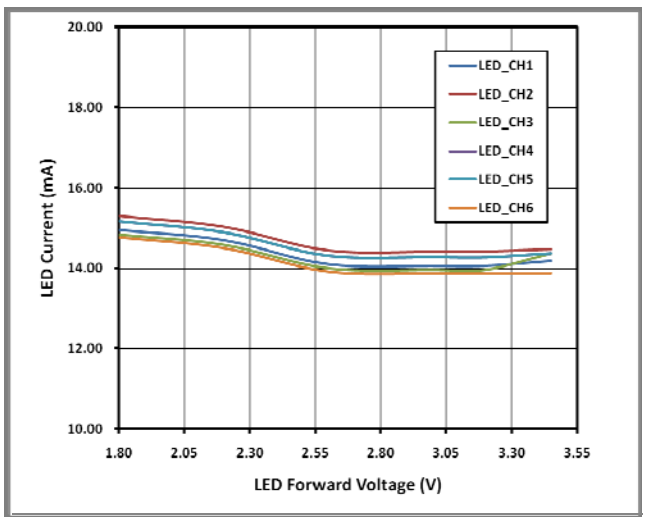

Figure 11. Load Regulation at 15 mA/Output

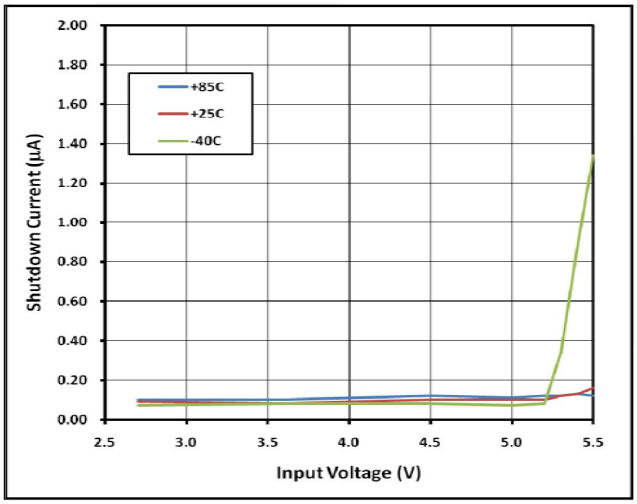

Figure 12. Shutdown Current vs. Input Voltage

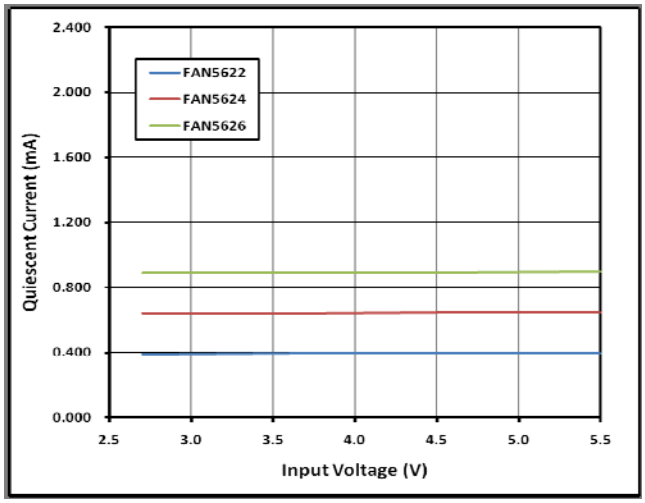

Figure 13. Quiescent Current vs. Input Voltage

Share Feedback
Your Opinion Matters

TYPICAL PERFORMANCE CHARACTERISTICS (continued)

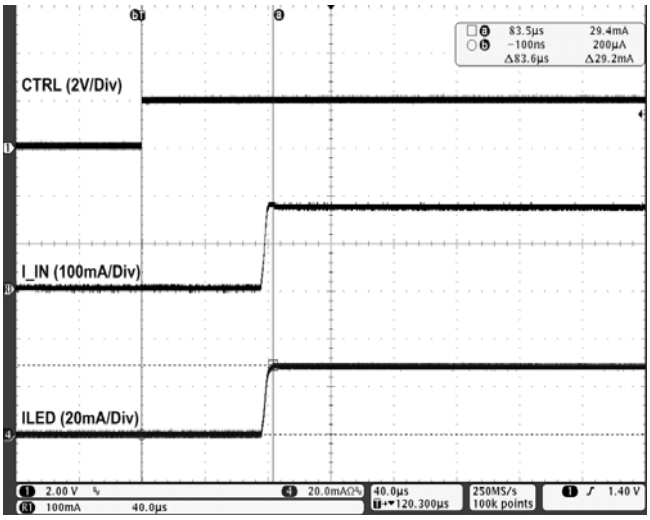

Figure 14. Startup Waveform for FAN5626

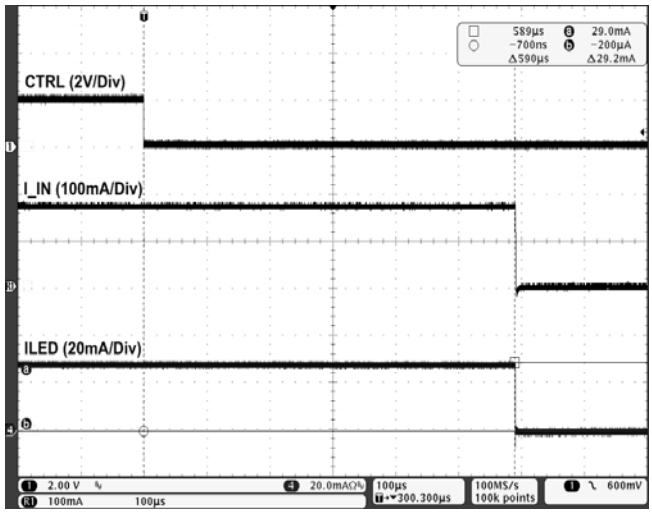

Figure 15. Shutdown Waveform for FAN5626

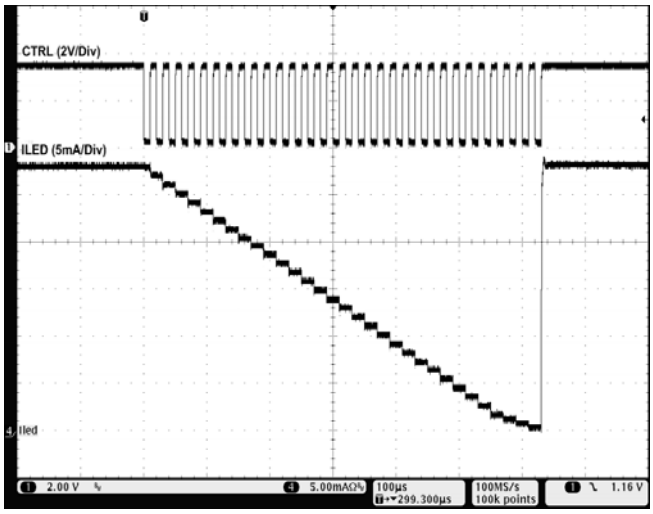

Figure 16. Dimming Operation

Share Feedback
Your Opinion Matters

CIRCUIT DESCRIPTION

The FAN5622, FAN5624, and FAN5626 are a family of current-sink linear LED driver ICs able to drive two, four, and six LEDs respectively. These three devices are powered directly from 2.7 V to 5.5 V supply and all the channels are controlled via the integrated current sinks from the external power source. Designed with a very low drop-out voltage, the FAN562x products can operate close to the input supply voltage without the need for additional inductive boost or capacitive switching circuitry.

All three devices require only two additional discrete passive components: a single 1 μF input ceramic capacitor and a resistor (R_{SET}) to set the maximum current for the LEDs. Each current-sink output provides constant current and can drive the LEDs up to 30 mA. **onsemi**'s TinyWire single-wire digital interface enables these LED drivers to program the brightness level of the LEDs in 32 linear steps.

Setting Maximum Current

The maximum LED current of the FAN5622, FAN5624, and FAN5626 is programmed by an external resistor called RSET. The maximum full-scale LED current for all three LED drivers is 30 mA and it can go as low as 5 mA. The FAN562x products also operate below 5 mA full-scale LED current by using a larger R_{SET} value. However, the LED channel accuracy and matching specifications are guaranteed. Table 1 shows the RSET resistor values for several full-scale current levels.

Table 1. MAXIMUM LED CURRENT SETTINGS BY RESISTOR

I_{LED} (mA)	R_{SET} (kΩ)
5	56.20
10	28.70
15	19.10
20	14.30
25	11.50
30	9.53

Digital Interface & Dimming Control

The FAN5622, FAN5624, and FAN5626 implement a simple single-wire digital interface to program the LED brightness to one of thirty two (32) levels spaced in linear steps. To maintain the brightness of the LEDs at a specific dimming level, the digital pulse signal to the CTRL pin should be held HIGH for that last pulse. It is held HIGH for as long as desired to keep the LEDs illuminated at that specific brightness level.

Table 2 outlines the dimming levels while Figure 17 shows how to change the dimming levels.

Table 2. BRIGHTNESS CONTROL LEVELS (R_{SET} = 19.10 kΩ)

Dimming Level	Current Level	I_{LED} (mA)
1	1.67%	0.25
2	3.33%	0.50
3	5.00%	0.75
4	6.67%	1.00
5	10.00%	1.50
6	13.33%	2.00
7	16.67%	2.50
8	20.00%	3.00
9	23.33%	3.50
10	26.67%	4.00
11	30.00%	4.50
12	33.33%	5.00
13	36.67%	5.50
14	40.00%	6.00
15	43.33%	6.50
16	46.67%	7.00
17	50.00%	7.50
18	53.33%	8.00
19	56.67%	8.50
20	60.00%	9.00
21	63.33%	9.50
22	66.67%	10.00
23	70.00%	10.50
24	73.33%	11.00
25	76.67%	11.50
26	80.00%	12.00
27	83.33%	12.50
28	86.67%	13.00
29	90.00%	13.50
30	93.33%	14.00
31	96.67%	14.50
32	100.00%	15.00

Share Feedback
Your Opinion Matters

Digital Dimming Control

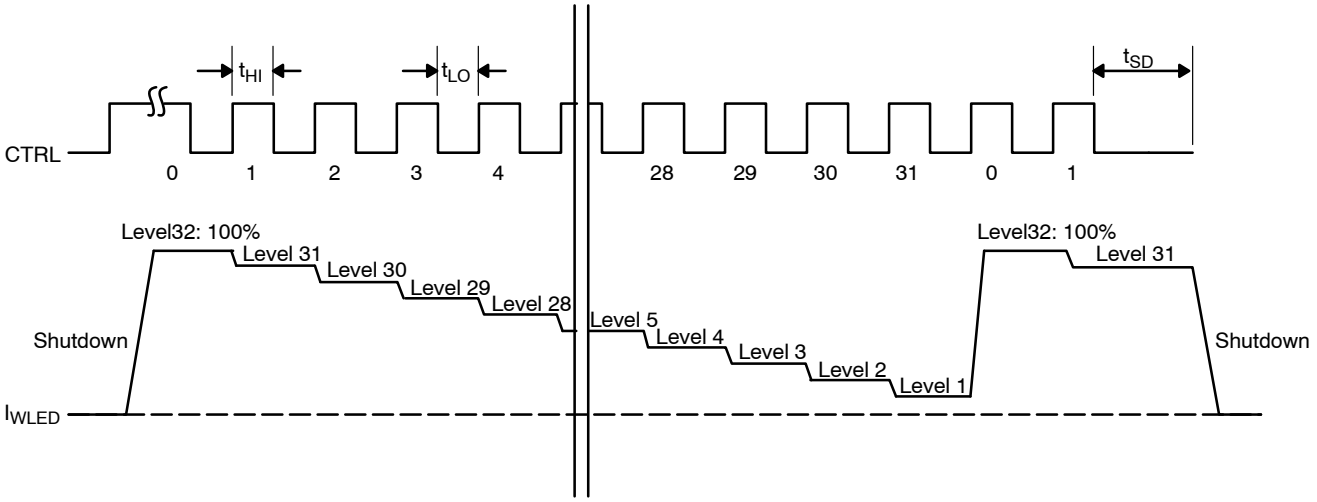

Figure 17. Digital Pulse Dimming Control Diagram

ORDERING INFORMATION

Part Number	# of Channels	Temperature Range	Package	Shipping†
FAN5622SX	2	−40 to 85 °C	6-Lead, SUPERSOT™ 6, JEDEC MO-193, 1.6 mm Wide (Pb-Free)	3000 / Tape & Reel
FAN5624UMPX	4	−40 to 85 °C	10-Lead, Ultrathin Molded Leadless Package (UMLP) (Pb-Free)	5000 / Tape & Reel

DISCONTINUED (Note 6)

FAN5626LX	6	−40 to 85 °C	10-Lead, MicroPak, JEDEC MO255, 1.6 X 2.1 mm (Pb-Free)	5000 / Tape & Reel

† For information on tape and reel specifications, including part orientation and tape sizes, please refer to our Tape and Reel Packaging Specifications Brochure, BRD8011/D.

6. **DISCONTINUED:** This device is not available. Please contact your **onsemi** representative for information. The most current information on this device may be available on www.onsemi.com.

MicroPak and SUPERSOT are trademarks of Semiconductor Components Industries, LLC (SCILLC) or its subsidiaries in the United States and/or other countries.

Share Feedback
Your Opinion Matters

REVISION HISTORY

Revision	Description of Changes	Date
3	Rebranded the document to **onsemi** format. FAN5626LX OPN marked as Discontinued.	3/11/2026
4	Add verbiage to Pin Definitions and Recommended Operating Conditions clarifying CTRL.	7/22/2026

This document has undergone updates prior to the inclusion of this revision history table. The changes tracked here only reflect updates made on the noted approval dates.

Share Feedback
Your Opinion Matters



1
SCALE 2:1

TSOT23 6−Lead
CASE 419BL
ISSUE A

DATE 31 AUG 2020

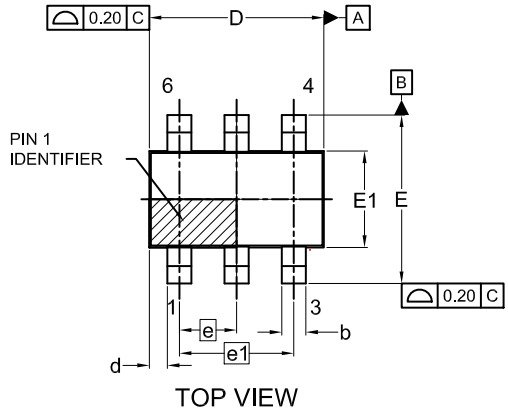

TOP VIEW

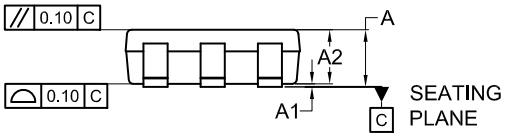

FRONT VIEW

NOTE 4

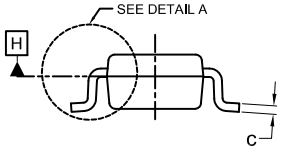

SIDE VIEW

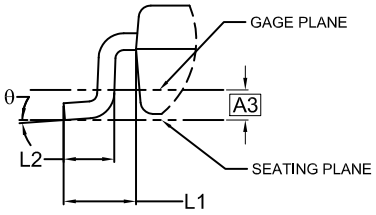

DETAIL A

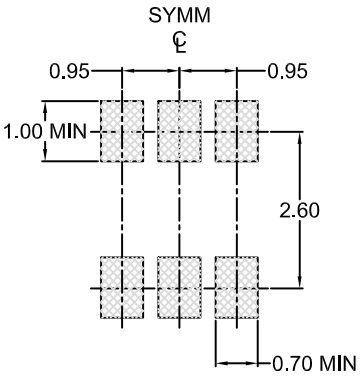

LAND PATTERN
RECOMMENDATION

*FOR ADDITIONAL INFORMATION ON OUR PB-FREE STRATEGY AND SOLDERING DETAILS, PLEASE DOWNLOAD THE ON SEMICONDUCTOR SOLDERING AND MOUNTING TECHNIQUES REFERENCE MANUAL, SOLDERRM/D.

NOTES:

1. DIMENSIONING AND TOLERANCING PER ASME Y14.5M, 2009.
2. CONTROLLING DIMENSION: MILLIMETERS
3. DIMENSIONS D AND E1 DO NOT INCLUDE MOLD FLASH, PROTRUSIONS, OR GATE BURRS. MOLD FLASH, PROTRUSIONS OR GATE BURRS SHALL NOT EXCEED 0.25MM PER END. DIMENSIONS D AND E1 ARE DETERMINED AT DATUM H.
4. SEATING PLANE IS DEFINED BY THE TERMINALS. "A1" IS DEFINED AS THE DISTANCE FROM THE SEATING PLANE TO THE LOWEST POINT ON THE PACKAGE BODY.

DIM	MILLIMETERS		
	MIN.	NOM.	MAX.
A	0.90	1.00	1.10
A1	0.00	0.05	0.10
A2	0.70	0.85	1.00
A3		0.25 BSC	
b	0.25	0.38	0.50
c	0.10	0.18	0.26
D	2.80	2.95	3.10
d		0.30 REF	
E	2.50	2.75	3.00
E1	1.30	1.50	1.70
e		0.95 BSC	
e1		1.90 BSC	
L1		0.60 REF	
L2	0.20	0.40	0.60
θ	0°	---	10°

GENERIC MARKING DIAGRAM*

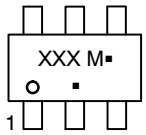

XXX = Specific Device Code
M = Date Code
▪ = Pb−Free Package

(Note: Microdot may be in either location)

*This information is generic. Please refer to device data sheet for actual part marking. Pb−Free indicator, "G" or microdot " ▪", may or may not be present. Some products may not follow the Generic Marking.

DOCUMENT NUMBER:	**98AON83292G**	Electronic versions are uncontrolled except when accessed directly from the Document Repository. Printed versions are uncontrolled except when stamped "CONTROLLED COPY" in red.
DESCRIPTION:	**TSOT23 6−Lead**	**PAGE 1 OF 1**

onsemi and ONSEMI are trademarks of Semiconductor Components Industries, LLC dba **onsemi** or its subsidiaries in the United States and/or other countries. **onsemi** reserves the right to make changes without further notice to any products herein. **onsemi** makes no warranty, representation or guarantee regarding the suitability of its products for any particular purpose, nor does **onsemi** assume any liability arising out of the application or use of any product or circuit, and specifically disclaims any and all liability, including without limitation special, consequential or incidental damages. **onsemi** does not convey any license under its patent rights nor the rights of others.

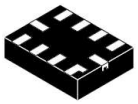

UQFN10 (MICROPAK™), 1.6X2.1, 0.5P
CASE 523AZ
ISSUE A

DATE 11 DEC 2019

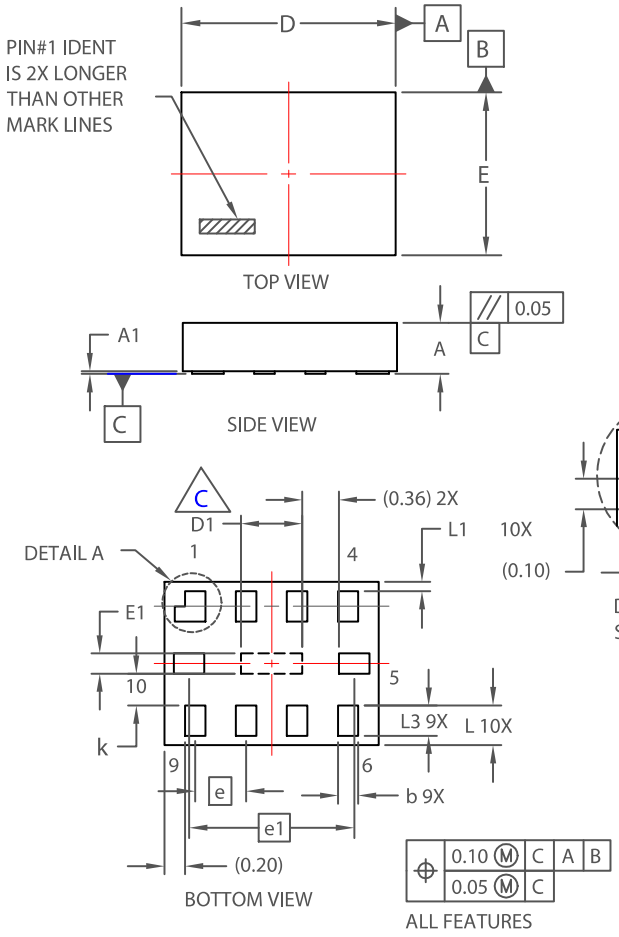

NOTES:
A. PACKAGE CONFORMS TO JEDEC REGISTRATION MO-255, VARIATION UABD.
B. DIMENSIONS ARE IN MILLIMETERS.
C. PRESENCE OF CENTER PAD IS PACKAGE SUPPLIER DEPENDENT. IF PRESENT IT IS NOT INTENDED TO BE SOLDERED AND HAS A BLACK OXIDE FINISH.
D. DIMENSIONS WITHIN ( ) ARE UNCONTROLLED.

DIM	MIN.	NOM.	MAX.
A	0.50	0.55	0.65
A1	0.00	0.025	0.05
b	0.15	0.20	0.25
D	2.00	2.10	2.20
D1	0.55	0.60	0.65
E	1.50	1.60	1.70
E1	0.15	0.20	0.25
e	0.50 BSC		
e1	1.62 BSC		
k	0.20	--	--
L	0.25	0.30	0.42
L1	0.00	0.09	0.15
L3	0.25	0.30	0.35

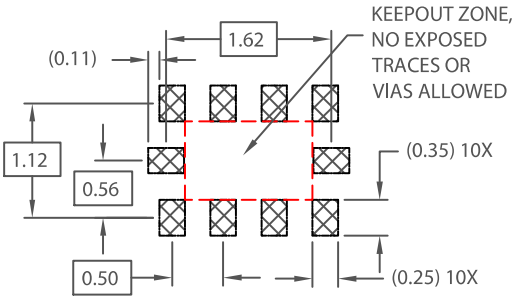

RECOMMENDED
MOUNTING FOOTPRINT *

*FOR ADDITIONAL INFORMATION ON OUR Pb-FREE STRATEGY AND SOLDERING DETAILS, PLEASE DOWNLOAD THE ON SEMICONDUCTOR SOLDERING AND MOUNTING TECHNIQUES REFERENCE MANUAL, SOLDERRM/D.

DOCUMENT NUMBER:	**98AON13592G**	Electronic versions are uncontrolled except when accessed directly from the Document Repository. Printed versions are uncontrolled except when stamped "CONTROLLED COPY" in red.
DESCRIPTION:	**UQFN10 (MICROPAK™), 1.6X2.1, 0.5P**	**PAGE 1 OF 1**

onsemi and onsemi are trademarks of Semiconductor Components Industries, LLC dba **onsemi** or its subsidiaries in the United States and/or other countries. **onsemi** reserves the right to make changes without further notice to any products herein. **onsemi** makes no warranty, representation or guarantee regarding the suitability of its products for any particular purpose, nor does **onsemi** assume any liability arising out of the application or use of any product or circuit, and specifically disclaims any and all liability, including without limitation special, consequential or incidental damages. **onsemi** does not convey any license under its patent rights nor the rights of others.

© Semiconductor Components Industries, LLC, 2016

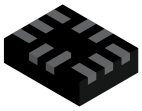

UQFN10 1.4x1.8, 0.4P
CASE 523BC
ISSUE B

DATE 13 MAY 2022

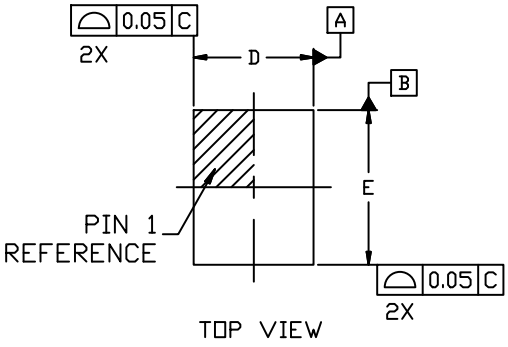

TOP VIEW

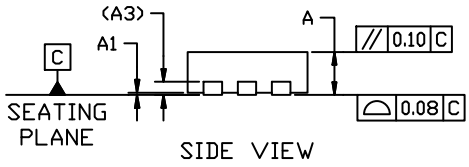

SIDE VIEW

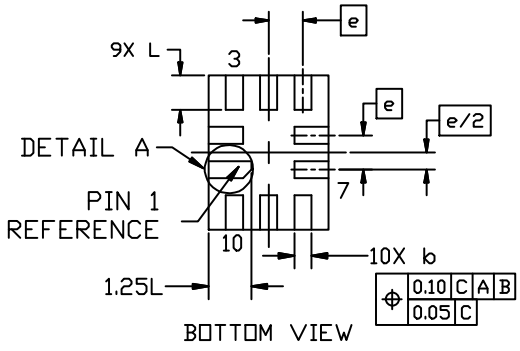

BOTTOM VIEW

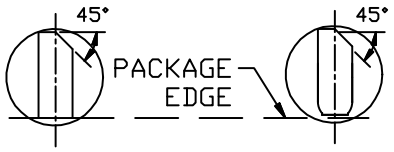

DETAIL A

OPTIONAL CONSTRUCTIONS

NOTES:

1. DIMENSIONING AND TOLERANCING PER ASME Y14.5, 2018
2. ALL DIMENSIONS ARE IN MILLIMETERS
3. DIMENSION b APPLIES TO PLATED TERMINALS AND IS MEASURED BETWEEN 0.15mm AND 0.30mm FROM THE TERMINAL TIP.
4. COPLANARITY APPLIES TO THE EXPOSED PAD AS WELL AS THE TERMINALS

DIM	MILLIMETERS		
	MIN.	NOM.	MAX.
A	0.45	0.50	0.55
A1	0.00	0.025	0.05
A3	0.152 REF		
b	0.15	0.20	0.25
D	1.35	1.40	1.45
E	1.75	1.80	1.85
e	0.40 BSC		
L	0.35	0.40	0.45

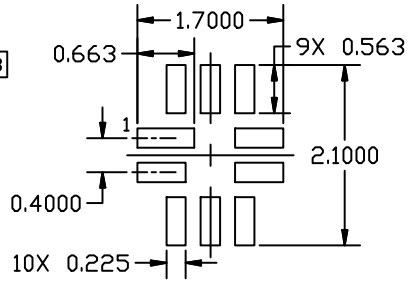

RECOMMENDED LAND PATTERN

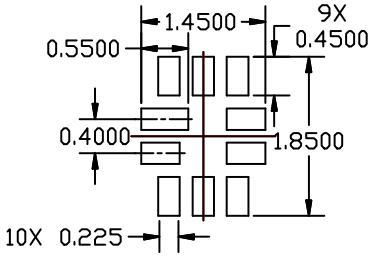

OPTIONAL MINIMIAL TOE LAND PATTERN

RECOMMENDED MOUNTING FOOTPRINT

For additional information on our Pb-Free strategy and soldering details, please download the onsemi Soldering and Mounting Techniques Reference Manual, SOLDERRM/D.

DOCUMENT NUMBER:	**98AON13705G**	Electronic versions are uncontrolled except when accessed directly from the Document Repository. Printed versions are uncontrolled except when stamped "CONTROLLED COPY" in red.	
DESCRIPTION:	**UQFN10 1.4x1.8, 0.4P**		**PAGE 1 OF 1**

onsemi and onsemi are trademarks of Semiconductor Components Industries, LLC dba **onsemi** or its subsidiaries in the United States and/or other countries. **onsemi** reserves the right to make changes without further notice to any products herein. **onsemi** makes no warranty, representation or guarantee regarding the suitability of its products for any particular purpose, nor does **onsemi** assume any liability arising out of the application or use of any product or circuit, and specifically disclaims any and all liability, including without limitation special, consequential or incidental damages. **onsemi** does not convey any license under its patent rights nor the rights of others.

© Semiconductor Components Industries, LLC, 2016

onsemi, , and other names, marks, and brands are registered and/or common law trademarks of Semiconductor Components Industries, LLC dba "**onsemi**" or its affiliates and/or subsidiaries in the United States and/or other countries. **onsemi** owns the rights to a number of patents, trademarks, copyrights, trade secrets, and other intellectual property. A listing of **onsemi**'s product/patent coverage may be accessed at www.onsemi.com/site/pdf/Patent−Marking.pdf. **onsemi** reserves the right to make changes at any time to any products or information herein, without notice. The information herein is provided "as−is" and **onsemi** makes no warranty, representation or guarantee regarding the accuracy of the information, product features, availability, functionality, or suitability of its products for any particular purpose, nor does **onsemi** assume any liability arising out of the application or use of any product or circuit, and specifically disclaims any and all liability, including without limitation special, consequential or incidental damages. Buyer is responsible for its products and applications using **onsemi** products, including compliance with all laws, regulations and safety requirements or standards, regardless of any support or applications information provided by **onsemi**. "Typical" parameters which may be provided in **onsemi** data sheets and/or specifications can and do vary in different applications and actual performance may vary over time. All operating parameters, including "Typicals" must be validated for each customer application by customer's technical experts. **onsemi** does not convey any license under any of its intellectual property rights nor the rights of others. **onsemi** products are not designed, intended, or authorized for use as a critical component in life support systems or any FDA Class 3 medical devices or medical devices with a same or similar classification in a foreign jurisdiction or any devices intended for implantation in the human body. Should Buyer purchase or use **onsemi** products for any such unintended or unauthorized application, Buyer shall indemnify and hold **onsemi** and its officers, employees, subsidiaries, affiliates, and distributors harmless against all claims, costs, damages, and expenses, and reasonable attorney fees arising out of, directly or indirectly, any claim of personal injury or death associated with such unintended or unauthorized use, even if such claim alleges that **onsemi** was negligent regarding the design or manufacture of the part. **onsemi** is an Equal Opportunity/Affirmative Action Employer. This literature is subject to all applicable copyright laws and is not for resale in any manner.

ADDITIONAL INFORMATION

TECHNICAL PUBLICATIONS:
Technical Library: www.onsemi.com/design/resources/technical−documentation
onsemi Website: www.onsemi.com

ONLINE SUPPORT: www.onsemi.com/support
For additional information, please contact your local Sales Representative at www.onsemi.com/support/sales