DELKIN DEVICES®

Automotive Grade 2

INDUSTRIAL BGA SSD

Engineering Specification

Document Number: 401-0603-00

Revision: B



© 2025 | Delkin Devices, Inc. | www.delkin.com | ISO 9001:2015

13350 Kirkham Way | Poway, CA 92064-7117 | Toll Free: 800.637.8087

Overview

- **Capacity**
  - 64GB, 128GB, 256GB, 512GB & 1TB
- **Form Factor**
  - BGA 16mmx 20mm
- **PCIe Express Base Specification**
  - Gen 4 x 4 lanes
  - NVMe 1.4
  - PCI Express Base 4.0
- **Performance**
  - Read: Up to 3650 MB/s
  - Write: Up to 2900 MB/s
- **Reliability**
  - MTBF >1.5 million hours
  - UBER < 1 sector per10^{16} bits read
- **Voltage Supply Rails**
  - P1 = 2.5V
  - P2= 1.2V
  - P3= 0.85V
- **Power Saving Modes (Optional)**
  - PS0/PS1/PS2/PS3/PS4 (<3.5W)
  - Support APST
  - Support ASPM
  - Support L1.2
- **Endurance: TBW**
  - Up to 1341TB
- **Operation Temperature Range**
  - -40°C ~ 105°C
- **Feature Support List**
  - SMART
  - Host controlled thermal management
  - Power loss protection
  - End to end data path protection
  - Thermal throttling
  - LDPC + RAID ECC
  - Support HMB[1]
  - RPMB
  - Boot Partition
- **RoHS compliant**

Notes:

1. Win10 (version 1809) and above supports HMB (Host Memory Buffer) function.

Table of Contents

1. INTRODUCTION 5
1.1. General Description 5
1.2. CONTROLLER BLOCK DIAGRAM 5
1.3. Flash Management 6
1.3.1. Error Correction Code (ECC) 6
1.3.2. Wear Leveling 6
1.3.3. Bad Block Management 6
1.3.4. TRIM 6
1.3.5. Smart Function 7
1.3.6. Over-Provision 7
1.3.7. Autonomous Power State Transitions 7
1.3.8. Active State Power Management 8
1.1. Advanced Device Security Features 8
1.1.1. Secure Erase 8
1.2. SSD Lifetime Management 9
1.2.1. Terabytes Written (TBW) 9
1.2.2. Media Wear Indicator 9
1.2.3. Read Only Mode (End of Life) 9
1.3. An Adaptive Approach to Performance Tuning 9
1.3.1. Throughput 9
2. PRODUCT SPECIFICATION OVERVIEW 10
2.1. LBA Range 11
2.2. Performance 11
2.3. TBW (Terabytes Written) 12
3. ENVIRONMENTAL SPECIFICATIONS 12
3.1. MTBF 12
3.2. Certifications and Compliances 12
4. ELECTRICAL SPECIFICATIONS 13
4.1. Supply Voltage 13
4.2. Power Consumption 13
5. INTERFACE 14
5.1. Pin Assignment and Descriptions 14
6. SUPPORTED COMMANDS 24

6.1. NVME COMMAND LIST 24
6.2. IDENTIFY DEVICE DATA 26
7. SMART ATTRIBUTES 33
8. PHYSICAL DIMENSIONS 34

Table 1.1-1 Part Numbers 5
Table 2.1-1 User Capacity and Addressable Sectors 11
Table 2.2-1 Performance 11
Table 2.3-1 TBW 12
Table 4.1-1 Supply Voltage 13
Table 4.2-1 Power Consumption of each power state in mW 13
Table 4.2-2 PS0 (Full Speed Mode) MAX Current in mA 14
Table 5.1-1 BGA Pin Description 14
Table 6.1-1 Admin Commands 24
Table 6.1-2 Admin Commands – NVM Command Set Specific 24
Table 6.1-3 NVM Commands 25
Table 6.2-1 Identify Controller Data Structure 26
Table 7-1 SMART Attributes (Log Identifier 02h) 33
Table 8-1 BGA SSD Physical Dimensions and Weight 34
Table 8-2 Package Specification: 64GB-256GB 36
Table 8-3 Package Specification: 512GB 37
Table 8-4 Package Specification: 1TB 38

Figure 1 Controller Block Diagram 5
Figure 2 Pin Assignment/Description 14
Figure 4 Top Physical View 34
Figure 3 Side Physical View 34
Figure 5 Bottom Physical View 35

1. INTRODUCTION

1.1. General Description

Delkin Devices BGA SSD delivers all the advantages of flash drive technology with PCIe Gen 4x4 interface in an embedded BGA form factor. It can reach up to 3700 MB/s read as well as 3000 MB/s write sequential performance. The Delkin Devices BGA SSD throughput is capable of saturating Gen 4x4 host interface. The power consumption of our BGA SSD is much lower than traditional hard drives, making it the best embedded solution for new platforms.

Table 1.1-1 Part Numbers

Part Number	Available Capacities	BGA	Size
FA64FSTXJ-AD000-2	64GB	291 Ball	16x20x1.15mm
FA1HFSTXE-AD000-2	128GB	291 Ball	16x20x1.15mm
FA2HFSTXE-AD000-2	256GB	291 Ball	16x20x1.15mm
FA5HFSTXE-AD000-2	512GB	291 Ball	16x20x1.35mm
FA1TFSTNV-AD000-2[1]	1TB	291 Ball	16x20x1.65mm

Note 1. APST and ASPM supported upon request. Requires different part number.

1.2. CONTROLLER BLOCK DIAGRAM

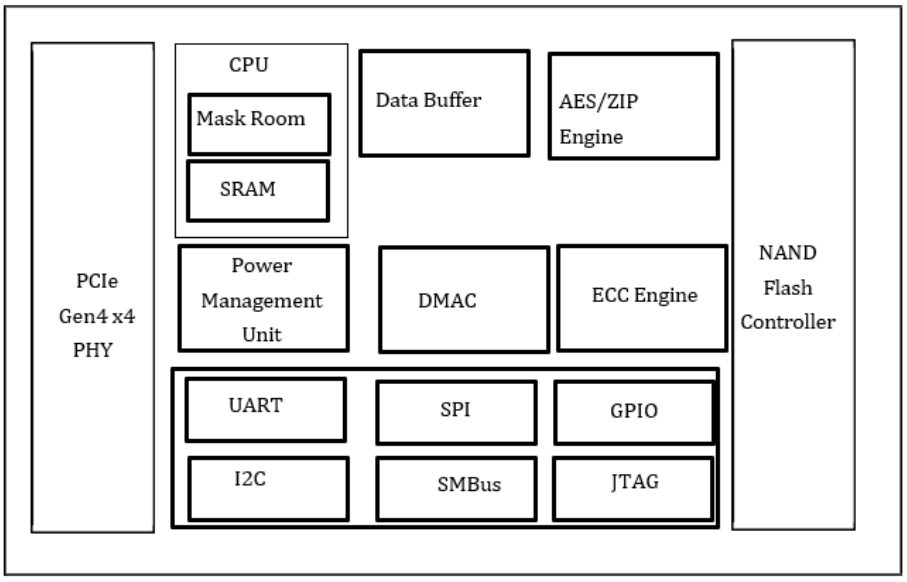

Figure 1 Controller Block Diagram

1.3. Flash Management

1.3.1. Error Correction Code (ECC)

Flash memory cells will deteriorate with use, which might generate random bit errors in the stored data. Thus, Delkin's BGA SSD controller applies the LDPC (Low Density Parity Check) ECC algorithm, which can detect and correct errors that occur during the Read process, ensuring data has been read correctly, as well as protect data from corruption.

1.3.2. Wear Leveling

NAND Flash devices can only undergo a limited number of program/erase cycles, and in most cases, the flash media are not used evenly. If some areas are updated more frequently than others, the lifetime of the device would be reduced significantly. Thus, Wear Leveling techniques are applied to extend the lifespan of NAND Flash by evenly distributing write and erase cycles across the media. Delkin's controller utilizes an advanced Wear Leveling algorithm, which can efficiently spread out the flash usage through the whole flash media area. Moreover, by implementing both dynamic and static Wear Leveling algorithms, the life expectancy of the NAND Flash is greatly improved.

1.3.3. Bad Block Management

Bad blocks are blocks that include one or more invalid bits, and their reliability is not guaranteed. Blocks that are identified and marked as bad by the manufacturer are referred to as "Initial Bad Blocks". Bad blocks that are developed during the lifespan of the flash are named "Later Bad Blocks". Delkin implements an efficient bad block management algorithm to detect the factory-produced bad blocks and manages any bad blocks that develop with use. This practice further prevents data being stored into bad blocks and improves the data reliability.

1.3.4. TRIM

TRIM is a feature which helps improve the read/write performance and speed of solid state drives (SSD). SSDs are not able to overwrite existing data, so the available space gradually becomes smaller with each use. With the TRIM command, the operating system can inform the SSD so that blocks of data that are no longer in use can be removed permanently. Thus, the SSD will perform the erase action, which prevents unused data from occupying blocks at all time.

1.3.5. Smart Function

SMART, an acronym for Self-Monitoring, Analysis and Reporting Technology, is a special function that allows a memory device to automatically monitor its health. When a failure is recorded by S.M.A.R.T., users can choose to replace the drive to prevent unexpected outage or data loss. S.M.A.R.T. can inform users impending failures while there is still time to perform proactive actions, such as save data to another device.

1.3.6. Over-Provision

Over Provisioning refers to the preserving additional area beyond user capacity in a SSD, which is not visible to users and cannot be used by them. However, it allows a SSD controller to utilize additional space for better performance and WAF. With Over Provisioning, the performance and IOPS (Input/ Output Operations per Second) are improved by providing the controller additional space to manage P/E cycles, which enhances the reliability and endurance as well. Moreover, the write amplification of the SSD becomes lower when the controller writes data to the flash.

1.3.7. Autonomous Power State Transitions

The device is designed to support multiple power states. Autonomous Power State Transitions (APST) enables the device to automatically transition between different power states based on activity levels. These states include reduced-power operational modes—where performance may be lower—as well as non-operational sleep states, where the device suspends activity and wakes upon demand.

APST manages automatic transitions between operational power states (e.g., PS0, PS1, PS2) and non-operational states (e.g., PS3, PS4), helping optimize power efficiency without requiring direct intervention from the host.

1.3.8. Active State Power Management

Active-State Power Management (ASPM) is a power management mechanism designed for PCI Express (PCIe) devices. It is an autonomous, hardware-based solution that enables power savings even when connected components are in a fully active state.

ASPM controls the PCIe Link Power Management States, allowing transitions between active and various standby modes to optimize power efficiency. PCI Express defines the following Link power management states:

L0: Active state

L0s: A low-resume-latency, energy-saving "standby" state

L1: Higher latency, lower power "standby" state

L1.1: Lite energy-saving state

L1.2: Deep energy-saving state

These states are managed by ASPM to balance performance and power consumption in high-efficiency systems.

1.1. Advanced Device Security Features

1.1.1. Secure Erase

Secure Erase is a standard NVMe format command and will make all “0xFF” to fully wipe all the data on hard drives and SSDs. When this command is issued, SSD controller will erase its storage blocks and return to its factory default settings.

1.2. SSD Lifetime Management

1.2.1. Terabytes Written (TBW)

TBW (Terabytes Written) is a measurement of SSDs' expected lifespan, which represents the amount of data written to the device. To calculate the TBW of a SSD, the following equation is applied:

TBW = [(NAND Endurance) x (SSD Capacity)] / [WAF]

NAND Endurance: NAND endurance refers to the P/E (Program/Erase) cycle of a NAND flash.
SSD Capacity: The SSD capacity is the specific capacity in total of an SSD.
WAF: Write Amplification Factor (WAF) is a numerical value representing the ratio between the amount of data that an SSD controller needs to write and the amount of data that the host's flash controller writes. A better WAF, which is near 1, guarantees better endurance and lower frequency of data written to flash memory.
TBW in this document is based on JEDEC 219 workload.

1.2.2. Media Wear Indicator

Actual life indicator reported by SMART Attribute byte index [5], Percentage Used, recommends. User to replace drive when reaching to 100%.

1.2.3. Read Only Mode (End of Life)

When drive is aged by cumulated program/erase cycles, media worn-out may cause increasing numbers of later bad block. When the number of usable good blocks falls outside a defined usable range, the drive will notify Host through AER event and Critical Warning to enter Read Only Mode to prevent further data corruption. User should start to replace the drive with another one immediately.

1.3. An Adaptive Approach to Performance Tuning

1.3.1. Throughput

Based on the available space of the disk, the Delkin Device BGA SSD will regulate the read/write speed and manage the performance of throughput. When there remains a lot of space, the firmware will continuously perform read/write action. There is still no need to implement garbage collection to allocate and release memory, which will accelerate the read/write processing to improve the performance. Contrarily, when the space is going to be used up, the BGA SSD will slow down the read/write processing and implement garbage collection to release memory. Hence, read/write performance will become slower.

2. PRODUCT SPECIFICATION OVERVIEW

Capacities

- 64GB, 128GB, 256GB, 512GB & 1TB

Operation Temp. Range

- -40~105°C

Electrical/Physical Interface

- PCIe Interface
- Compliant with NVMe 1.4
- PCIe Express Base ver. 4.0
- PCIe Gen 4 x 4 lane & backward compatible to PCIe Gen 3, Gen 2 and Gen 1
- Support up to QD 128 with queue depth of up to 64K
- Support power management

Supported NAND Flash

- Support up to 16 Flash Chip Enables (CE) within a single design
- Support 8-bit I/O NAND Flash
- Support Toggle 2.0, Toggle 3.0 and Toggle 4.0 interface

ECC Scheme

- BGA SSD applies the LDPC + RAID ECC algorithm.

Sector Size Support

- 512byte
- 4KB

UART/GPIO

Voltage Rails

- P1=2.5V
- P2=1.2V
- P3=0.85V

Support SMART and TRIM commands

2.1. LBA Range

- IDEMA Standard

Table 2.1-1 User Capacity and Addressable Sectors

Capacity	512 Bytes/Sector		4K Bytes/Sector	
	Number of Total LBA	User Available Bytes	Number of Total LBA	User Available Bytes
64GB	125,045,424	64,023,257,088	15,630,678	64,023,257,088
128GB	250,069,680	128,035,676,160	31,258,710	128,035,676,160
256GB	500,118,192	256,060,514,304	62,514,774	256,060,514,304
512GB	1,000,215,216	512,110,190,592	125,026,902	512,110,190,592
1TB	2,000,409,264	1,024,209,543,168	250,051,158	1,024,209,543,168

2.2. Performance

- PS0 (Full Speed Mode)

Table 2.2-1 Performance

Capacity	Sequential		Random	
	Read (MB/s)	Write (MB/s)	Read (IOPS)	Write (IOPS)
64GB	660	250	30K	53K
128GB	1400	510	60K	120K
256GB	2950	1000	110K	245K
512GB	3650	1900	220K	450K
1TB	365	2900	380	500K

NOTES:
Performance is estimated with the following conditions.

- Sequential: CrystalDiskMark 7.0, 1GB range, QD=8T1
- Random: IOMeter, 1GB range, 4K data size, QD=32T16

2.3. TBW (Terabytes Written)

Table 2.3-1 TBW

Capacity	TBW
64GB	70
128GB	85
256GB	248
512GB	661
1TB	1341

NOTES:

- TBW is measured by JEDEC Client 219A workload and calculated with PE count = 3000.
- TBW may differ according to flash configuration and platform configuration.
- The SSD supports trim function. If Operation System does not support trim command, performance and TBW will be affected. (Like certain Windows OS, Linux kernel version before 2.6.33, other OS please reference each own user manual)
- The endurance of SSD could be estimated based on user behavior, NAND endurance cycles, and write amplification factor.

3. ENVIRONMENTAL SPECIFICATIONS

3.1. MTBF

MTBF, an acronym for Mean Time Between Failures, is a measure of a device's reliability. Its value represents the average time between a repair and the next failure. The measure is typically in units of hours. The higher the MTBF value, the higher the reliability of the device.

The predicted result of Delkin's BGA SSD is more than 1,500,000 hours.

3.2. Certifications and Compliances

- RoHS
- WHQL
- PCI Express Base 4.0
- UNH-IOL NVM Express Logo

.

4. ELECTRICAL SPECIFICATIONS

4.1. Supply Voltage

Table 4.1-1 Supply Voltage

Parameter	Rating			
Operating Voltage	Specification	Min.	Nom.	Max.
	Flash Core	+2.45V	+2.5V	+2.75V
	Flash IO supply	+1.16V	+1.2V	+1.26V
	Controller Core	+0.80V	+0.85V	+0.88V
Rise Time (Max/Min)	1.2ms/0.8ms			
Fall Time (Max/Min)	5s/1ms			

NOTES:

1. Minimum time between power removed from SSD (VCC < 500 mW) and power re-applied to the drive.
2. It shall be driven down Vcc to below 0.5V and stay low for at least 1ms before Vcc power up.
3. The Min. Off Time may differ according to power solution used.
4. Please follow PCI Express M.2 Specification: BGA SSD Voltage Supply Power-off Sequencing.

4.2. Power Consumption

Table 4.2-1 Power Consumption of each power state in mW

Capacity	Read			Write			PS3	PS4
	PS0	PS1	PS2	PS0	PS1	PS2		
64GB	1750	1465	1250	1550	1250	1200	50	5
128GB	2065	1800	1250	1650	1350	1200	50	5
256GB	2,900	2,000	1,350	2,200	1,700	1,200	50	5
512GB	3,200	2,100	1,300	2,650	1,700	1,200	50	5
1TB	3,500	2,100	1,300	3,500	1,800	1,200	50	5

NOTES:

1.Power consumption is estimated with the condition under ambient temperature @25ºC.

2.The average value of power consumption is achieved based on 100% conversion efficiency.

3.The temperature of a storage device in PS1 should remain constant or should slightly decrease for all workloads so the actual power in PS1 should be lower than PS0.

4.The temperature of a storage device in PS2 should decrease sharply for all workloads so the actual power in PS2 should be lower than PS1.

Table 4.2-2 PS0 (Full Speed Mode) MAX Current in mA

Capacity	PWR1 Max	PWR2 Max	PWR3 Max
64GB	300	430	1500
128GB	650	650	1500
256GB	1000	1000	1500
512GB	1000	1200	1600
1TB	1100	1300	1550

NOTES:
1.Power consumption is estimated with the condition under ambient temperature @25oC.
2.The average value of power consumption is achieved based on 100% conversion efficiency.
3.Max current is estimated under SLC mode.

5.INTERFACE

5.1. Pin Assignment and Descriptions

	1	2	3	4	5	6	7	8	9	10	11	12	13	14	15	16	17	18	
A	DNU	DNU		DNU		DNU		DNU			DNU		DNU		DNU		DNU	DNU	A
B	DNU	DNU		DNU		DNU		1V8_REG			DNU		DNU		DNU		DNU	DNU	B
C	GND	GND	GND	GND	GND	DNU	DNU	DNU	DNU	FLASH_RZQ	DNU	DNU	DNU	DNU	GND	DNU	DNU	DNU	C
D				REFCLKP	REFCLKN	GND	PERSTN	CLKREQB	PWR_1	PWR_1	GND	XEXTRSTB	DIAG1	DNU	DNU				D
E	GND	GND	GND	GND	GND	GND	GND	DNU	PWR_1	PWR_1	GND	DNU	DIAG0	GND	GND	DNU	DNU	DNU	E
F				PERP0	PERN0	GND								DNU	GND				F
G	GND	GND	GND	GND	GND		PWR_3	PWR_3	GND	GND	PWR_3	PWR_3		GND	GND	DNU	DNU	DNU	G
H				PETP0	PETN0		PWR_3	PWR_3	GND	GND	PWR_3	PWR_3		GND	PLN				H
J	GND	GND	GND	GND	GND		PWR_3	PWR_3	GND	GND	PWR_3	PWR_3		GND	GND	DNU	DNU	DNU	J
K				PERP1	PERN1		GND	GND	GND	GND	GND	GND		DNU	PLA				K
L	GND	GND	GND	GND	GND		DNU	DNU	DNU	DNU	DNU	DNU		GND	GND	DNU	DNU	DNU	L
M				PETP1	PETN1		DNU	DNU	GND	GND	DNU	DNU		DNU	DNU				M
N	GND	GND	GND	GND	GND		DNU	DNU	DNU	DNU	DNU	DNU		GND	GND	DNU	JTAG_TCK	JTAG_TMS	N
P				PERP2	PERN2		GND	GND	GND	GND	GND	GND		DNU	DNU				P
R	GND	GND	GND	GND	GND		PWR_2	PWR_2	GND	GND	PWR_2	PWR_2		GND	GND	DNU	XGPIO0	DNU	R
T				PETP2	PETN2		PWR_2	PWR_2	GND	GND	PWR_2	PWR_2		DNU	DNU				T
U	GND	GND	GND	GND	GND		PWR_2	PWR_2	GND	GND	PWR_2	PWR_2		GND	GND	DNU	SMB_CLK	SMB_DATA	U
V				PERP3	PERN3									DNU	DNU				V
W	GND	GND	GND	GND	GND	GND	LED/DAS	DNU	PWR_1	PWR_1	GND	DNU	DNU	GND	GND	DNU	DNU	DNU	W
Y				PETP3	PETN3	GND	DNU	DNU	PWR_1	PWR_1	GND	DNU	GND	DNU	DNU				Y
AA	GND	GND	GND	GND	GND	DNU	DNU	DNU	DNU	CTL_RZQ	DNU	DNU	DNU	GND	GND	DNU	DNU	DNU	AA
AB	DNU	DNU		DNU		DNU		DNU			DNU		DNU		DNU		DNU	DNU	AB
AC	DNU	DNU		DNU		DNU		DNU			DNU		DNU		DNU		DNU	DNU	AC
	1	2	3	4	5	6	7	8	9	10	11	12	13	14	15	16	17	18	

Figure 2 Pin Assignment/Description

Table 5.1-1 BGA Pin Description

Pin Name	BGA 291	Pin Type	Description	IO Voltage
UART/GPIO				
XGPIO0	R17	I	Debug only	1.8V
DIAG1	D13	I	Debug only	1.8V
DIAG0	E13	O	Debug only	1.8V
SMB_CLK	U17	I/O	Debug only	1.8V
SMB_DATA	U18	I/O	Debug only	1.8V
JTAG_TCK	N17	I/O	Debug only	1.8V
JTAG_TMS	N18	I/O	Debug only	1.8V
XEXTRSTB	D12	-	Debug only	1.8V
1V8_REG	B8	-	Debug only	1.8V
PCIe Interface Signals				
PERP0	F4	I/O	PCIe TX/RX Differential signals defined by the PCI Express Card Electromechanical Specification.	--
PERN0	F5			
PERP1	K4			
PERN1	K5			
PERP2	P4			
PERN2	P5			
PERP3	V4			
PERN3	V5			
PETP0	H4			
PETN0	H5			
PETP1	M4			
PETN1	M5			
PETP2	T4			
PETN2	T5			
PETP3	Y4			
PETN3	Y5			
REFCLKP	D4	I	PCIe Reference Clock signals (100 MHz) defined by the PCI Express Card Electromechanical specification.	--
REFCLKN	D5	I		--

PERSTN	D7	I	PCIe Reset is a functional reset to the card as defined by the PCI Express Mini Card Electromechanical	1.8V
CLKREQB	D8	I/O	Clock Request is a reference clock request signal as defined by the PCI Express Mini Card Electromechanical Specification; Also used by L1 PM Substates.	1.8V

Optional Signals				
FLASH_RZQ	C10	I	Flash Calibration REF RESISTENCE	-
CTL_RZQ	AA10	I	CTL Calibration REF RESISTENCE	-
PLA	K15	O	Power Loss Acknowledge	1.8V
PLN	H15	I	Power Loss Notification	1.8V
SSD Specific Signals				
LED/DAS	W7	O	Open drain, active low signal. This signal is used to allow the Adapter to provide status indication via LED device that will be provided by the system.	3.3V
Power Supply Signals				
PWR_1	D9	I	+2.5 V source	2.5V
	D10			
	E9			
	E10			
	W9			
	W10			
	Y9			
	Y10			
PWR_2	R7	I	+1.2 V source	1.2V
	R8			
	R11			
	R12			
	T7			
	T8			
	T11			

PWR_2	T12 U7 U8 U11 U12	I	+1.2 V source	1.2V
PWR_3	G7 G8 G11 G12 H7 H8 H11 H12 J7 J8 J11 J12	I	+0.85 V source	0.85V
Pin Name	BGA 291	Description		
GND	C1 C2 C3 C4 C5 C15 D6 D11 E1 E2 E3 E4 E5 E6 E7	GND		

Pin Name	BGA 291	Description
GND	E11	GND
	E14	
	E15	
	F6	
	F15	
	G1	
	G2	
	G3	
	G4	
	G5	
	G9	
	G10	
	G14	
	G15	
	H9	
	H10	
	H14	
	J1	
	J2	
	J3	
	GND	
	J4	
	J5	
	J9	
	J10	
	J14	
	J15	
	K7	
	K8	
	K9	
	K10	

Pin Name	BGA 291	Description
GND	K11	GND
	K12	
	L1	
	L2	
	L3	
	L4	
	L5	
	L14	
	L15	
	M9	
	M10	
	N1	
	N2	
	N3	
	N4	
	N5	
	N14	
	N15	
	P7	
	P8	
	P9	
	P10	
	P11	
	P12	
	R1	
	R2	
	R3	
	R4	
	R5	
	R9	
	R10	

Pin Name	BGA 291	Description
GND	R14	GND
	R15	
	T9	
	T10	
	U1	
	U2	
	U3	
	U4	
	U5	
	U9	
	U10	
	U14	
	U15	
	W1	
	W2	
	W3	
	W4	
	W5	
	W6	
	W11	
	W14	
	W15	
	Y6	
	Y11	
	Y13	
	AA1	
	AA2	
	AA3	
	AA4	
	AA5	
	AA14	
	AA15	

Pin Name	BGA 291	Description
DNU	A1	Do not use. Manufacturing purpose only
	A2	
	A4	
	A6	
	A8	
	A11	
	A13	
	A15	
	A17	
	A18	
	B1	
	B2	
	B4	
	B6	
	B11	
	B13	
	B15	
	B17	
	B18	
	C6	
	C7	
	C8	
	C9	
	C11	
	C12	
	C13	
	C14	
	C16	
	C17	
	C18	
	D14	
	D15	

Pin Name	BGA 291	Description
DNU	E8	Do not use. Manufacturing purpose only
	E12	
	E16	
	E17	
	E18	
	F14	
	G16	
	G17	
	G18	
	J16	
	J17	
	J18	
	K14	
	L7	
	L8	
	L9	
	L10	
	L11	
	L12	
	L16	
	L17	
	L18	
	M7	
	M8	
	M11	
	M12	
	M14	
	M15	
	N7	
	N8	
	N9	
	N10	

Pin Name	BGA 291	Description
DNU	N11	Do not use. Manufacturing purpose only
	N12	
	N16	
	P14	
	P15	
	R16	
	R18	
	T14	
	T15	
	U16	
	V14	
	V15	
	W8	
	W12	
	W13	
	W16	
	W17	
	W18	
	Y7	
	Y8	
	Y12	
	Y14	
	Y15	
	AA6	
	AA7	
	AA8	
	AA9	
	AA11	
	AA12	
	AA13	
	AA16	
	AA17	

Pin Name	BGA 291	Description
DNU	AA18	Do not use. Manufacturing purpose only
	AB1	
	AB2	
	AB4	
	AB6	
	AB8	
	AB11	
	AB13	
	AB15	
	AB17	
	AB18	
	AC1	
	AC2	
	AC4	
	AC6	
	AC8	
	AC11	
	AC13	
	AC15	
	AC17	
	AC18	

6. SUPPORTED COMMANDS

6.1. NVME COMMAND LIST

Table 6.1-1 Admin Commands

Opcode	Command Description
00h	Delete I/O Submission Queue
01h	Create I/O Submission Queue
02h	Get Log Page
04h	Delete I/O Completion Queue
05h	Create I/O Completion Queue
06h	Identify
08h	Abort
09h	Set Features
0Ah	Get Features
0Ch	Asynchronous Event Request
0Dh	Namespace Management
10h	Firmware Activate
11h	Firmware Image Download
14h	Device Self-test
15h	Namespace Attachment
18h	Keep Alive

Table 6.1-2 Admin Commands – NVM Command Set Specific

Opcode	Command Description
80h	Format NVM
81h	Security Send
82h	Security Receive
84h	Sanitize

Table 6.1-3 NVM Commands

Opcode	Command Description
00h	Flush
01h	Write
02h	Read
04h	Write Uncorrectable
05h	Compare
08h	Writes Zeros
09h	Dataset Management

6.2. IDENTIFY DEVICE DATA

Table 6.2-1 Identify Controller Data Structure

Bytes	Description	Default Value
01:00	PCI Vendor ID (VID)	0x1E33
03:02	PCI Subsystem Vendor ID (SSVID)	0x1E33
23:04	Serial Number (SN)	SN
63:24	Model Number (MN)	Model Number
71:64	Firmware Revision (FR)	FW Name
72	Recommended Arbitration Burst (RAB)	0x4
75:73	IEEE OUI Identifier (IEEE)	Assigned by IEEE/RAC
76	Controller Multi-Path I/O and Namespace Sharing Capabilities (CMIC)	0x0
77	Maximum Data Transfer Size (MDTS)	0x6
79:78	Controller ID (CNTLID)	0x0000
83:80	Version (VER)	0x10400
87:84	RTD3 Resume Latency (RTD3R)	0x186A0
91:88	RTD3 Entry Latency (RTD3E)	0x4C4B40
95:92	Optional Asynchronous Events Supported (OAES)	0x0
99:96	Controller Attributes (CTRATT)	0x2
101:100	Read Recovery Levels Supported (RRLS)	0x0
110:102	Reserved	0x00
111	Controller Type (CNTRLTYPE)	0x01
127:112	FRU Globally Unique Identifier (FGUID)	0x00
129:128	Command Retry Delay Time 1 (CRDT1)	0x0
131:130	Command Retry Delay Time 2 (CRDT2)	0x0
133:132	Command Retry Delay Time 3 (CRDT3)	0x0
239:134	Reserved	0x00
255:240	Refer to the NVMe Management Interface Specification for Definition	0x00
257:256	Optional Admin Command Support (OACS)	0x17

258	Abort Command Limit (ACL)	0x3
259	Asynchronous Event Request Limit (AERL)	0x3
260	Firmware Updates (FRMW)	0x12
261	Log Page Attributes (LPA)	0x1E
262	Error Log Page Entries (ELPE)	0x3E
263	Number of Power States Support (NPSS)	0x4
264	Admin Vendor Specific Command Configuration (AVSCC)	0x1
265	Autonomous Power State Transition Attributes (APSTA)	0x1
267:266	Warning Composite Temperature Threshold (WCTEMP)	0x16B
269:268	Critical Composite Temperature Threshold (CCTEMP)	0x170
271:270	Maximum Time for Firmware Activation (MTFA)	0x64
275:272	Host Memory Buffer Preferred Size (HMPRE)	0x00000000(HMB off) Depend on Disk Size (HMB on)
279:276	Host Memory Buffer Minimum Size (HMMIN)	0x00000000(HMB off) Depend on Disk Size (HMB on)
295:280	Total NVM Capacity (TNVMCAP)	non-zero
311:296	Unallocated NVM Capacity (UNVMCAP)	0x00
315:312	Replay Protected Memory Block Support (RPMBS)	0x1F1F0002
317:316	Extended Device Self-test Time (EDSTT)	0x1E
318	Device Self-test Options (DSTO)	0x0
319	Firmware Update Granularity (FWUG)	0x4
321:320	Keep Alive Support (KAS)	0x0
323:322	Host Controlled Thermal Management Attributes (HCTMA)	0x1
325:324	Minimum Thermal Management Temperature (MNTMT)	0x111
327:326	Maximum Thermal Management Temperature (MXTMT)	0x170
331:328	Sanitize Capabilities (SANICAP)	0xA0000006
335:332	Host Memory Buffer Minimum Descriptor Entry Size (HMMINDS)	0x0
337:336	Host Memory Maximum Descriptors Entries (HMMAXD)	0x0
339:338	NVM Set Identifier Maximum (NSETIDMAX)	0x0
341:340	Endurance Group Identifier Maximum (ENDGIDMAX)	0x0
342	ANA Transition Time (ANATT)	0x0

343	Asymmetric Namespace Access Capabilities (ANACAP)	0x0
347:344	ANA Group Identifier Maximum (ANAGRPMAX)	0x0
351:348	Number of ANA Group Identifiers (NANAGRPID)	
355:352	Persistent Event Log Size (PELS)	0x60
511:356	Reserved	0x00
512	Submission Queue Entry Size (SQES)	0x66
513	Completion Queue Entry Size (CQES)	0x44
515:514	Maximum Outstanding Commands (MAXCMD)	0x100
519:516	Number of Namespaces (NN)	0x1
521:520	Optional NVM Command Support (ONCS)	0xDF
523:522	Fused Operation Support (FUSES)	0x0
524	Format NVM Attributes (FNA)	0x0
525	Volatile Write Cache (VWC)	0x7
527:526	Atomic Write Unit Normal (AWUN)	0xFF
529:528	Atomic Write Unit Power Fail (AWUPF)	0x0
530	NVM Vendor Specific Command Configuration (NVSCC)	0x1
531	Reserved	0x0
533:532	Atomic Compare & Write Unit (ACWU)	0x0
535:534	Reserved	0x00
539:536	SGL Support (SGLS)	0x0
543:540	Maximum Number of Allowed Namespaces (MNAN)	0x0
767:544	Reserved	0x00
1023:768	NVM Subsystem NVMe Qualified Name (SUBNQN)	nqn.2020-11.com.delkin:nvme:PS5
1791:1024	Reserved	0x00
2047:1792	Refer to the NVMe over Fabrics specification	0x00
2079:2048	Power State 0 Descriptor (PSD0)	
Bit [255:184]	Reserved	0x00
Bit [183:182]	Active Power Scale (APS)	0x0
Bit [181:179]	Reserved	0x0
Bit [178:176]	Active Power Workload (APW)	0x0

Bit [175:160]	Active Power (ACTP)	0x0
Bit [159:152]	Reserved	0x0
Bit [151:150]	Idle Power Scale (IPS)	0x0
Bit [149:144]	Reserved	0x0
Bit [143:128]	Idle Power (IDLP)	0x0
Bit [127:125]	Reserved	0x0
Bit [124:120]	Relative Write Latency (RWL)	0x0
Bit [119:117]	Reserved	0x0
Bit [116:112]	Relative Write Throughput (RWT)	0x0
Bit [111:109]	Reserved	0x0
Bit [108:104]	Relative Read Latency (RRL)	0x0
Bit [103:101]	Reserved	0x0
Bit [100:96]	Relative Read Throughput (RRT)	0x0
Bit [95:64]	Exit Latency (EXLAT)	0x0
Bit [63:32]	Entry Latency (ENLAT)	0x0
Bit [31:26]	Reserved	0x0
Bytes	Description	Default Value
Bit [25]	Non-Operational State (NOPS)	0x0
Bit [24]	Max Power Scale (MPS)	0x0
Bit [23:16]	Reserved	0x0
Bit [15:0]	Maximum Power (MP)	0x1F4
2111:2080	Power State 1 Descriptor (PSD1)	
Bit [255:184]	Reserved	0x00
Bit [183:182]	Active Power Scale (APS)	0x0
Bit [181:179]	Reserved	0x0
Bit [178:176]	Active Power Workload (APW)	0x0
Bit [175:160]	Active Power (ACTP)	0x0
Bit [159:152]	Reserved	0x0
Bit [151:150]	Idle Power Scale (IPS)	0x0
Bit [149:144]	Reserved	0x0
Bit [143:128]	Idle Power (IDLP)	0x0
Bit [127:125]	Reserved	0x0
Bit [124:120]	Relative Write Latency (RWL)	0x1

Bit [119:117]	Reserved	0x0
Bit [116:112]	Relative Write Throughput (RWT)	0x1
Bit [111:109]	Reserved	0x0
Bit [108:104]	Relative Read Latency (RRL)	0x1
Bit [103:101]	Reserved	0x0
Bit [100:96]	Relative Read Throughput (RRT)	0x1
Bit [95:64]	Exit Latency (EXLAT)	0x0
Bit [63:32]	Entry Latency (ENLAT)	0x0
Bit [31:26]	Reserved	0x0
Bit [25]	Non-Operational State (NOPS)	0x0
Bit [24]	Max Power Scale (MPS)	0x0
Bit [23:16]	Reserved	0x0
Bit [15:0]	Maximum Power (MP)	0x1F4
2143:2112	Power State 2 Descriptor (PSD2)	
Bit [255:184]	Reserved	0x00
Bit [183:182]	Active Power Scale (APS)	0x0
Bit [181:179]	Reserved	0x0
Bit [178:176]	Active Power Workload (APW)	0x0
Bit [175:160]	Active Power (ACTP)	0x0
Bit [159:152]	Reserved	0x0
Bit [151:150]	Idle Power Scale (IPS)	0x0
Bit [149:144]	Reserved	0x0
Bytes	Description	Default Value
Bit [143:128]	Idle Power (IDLP)	0x0
Bit [127:125]	Reserved	0x0
Bit [124:120]	Relative Write Latency (RWL)	0x2
Bit [119:117]	Reserved	0x0
Bit [116:112]	Relative Write Throughput (RWT)	0x2
Bit [111:109]	Reserved	0x0
Bit [108:104]	Relative Read Latency (RRL)	0x2
Bit [103:101]	Reserved	0x0
Bit [100:96]	Relative Read Throughput (RRT)	0x2
Bit [95:64]	Exit Latency (EXLAT)	0x0

Bit [63:32]	Entry Latency (ENLAT)	0x0
Bit [31:26]	Reserved	0x0
Bit [25]	Non-Operational State (NOPS)	0x0
Bit [24]	Max Power Scale (MPS)	0x0
Bit [23:16]	Reserved	0x0
Bit [15:0]	Maximum Power (MP)	0x1F4
2175:2144	Power State 3 Descriptor (PSD3)	
Bit [255:184]	Reserved	0x00
Bit [183:182]	Active Power Scale (APS)	0x0
Bit [181:179]	Reserved	0x0
Bit [178:176]	Active Power Workload (APW)	0x0
Bit [175:160]	Active Power (ACTP)	0x0
Bit [159:152]	Reserved	0x0
Bit [151:150]	Idle Power Scale (IPS)	0x0
Bit [149:144]	Reserved	0x0
Bit [143:128]	Idle Power (IDLP)	0x0
Bit [127:125]	Reserved	0x0
Bit [124:120]	Relative Write Latency (RWL)	0x3
Bit [119:117]	Reserved	0x0
Bit [116:112]	Relative Write Throughput (RWT)	0x3
Bit [111:109]	Reserved	0x0
Bit [108:104]	Relative Read Latency (RRL)	0x3
Bit [103:101]	Reserved	0x0
Bit [100:96]	Relative Read Throughput (RRT)	0x3
Bit [95:64]	Exit Latency (EXLAT)	0x7D0
Bit [63:32]	Entry Latency (ENLAT)	0xBB8
Bit [31:26]	Reserved	0x0
Bit [25]	Non-Operational State (NOPS)	0x1
Bytes	Description	Default Value
Bit [24]	Max Power Scale (MPS)	0x0
Bit [23:16]	Reserved	0x0
Bit [15:0]	Maximum Power (MP)	0x1F4
2207:2176	Power State 4 Descriptor (PSD4)	

Bit [255:184]	Reserved	0x00
Bit [183:182]	Active Power Scale (APS)	0x0
Bit [181:179]	Reserved	0x0
Bit [178:176]	Active Power Workload (APW)	0x0
Bit [175:160]	Active Power (ACTP)	0x0
Bit [159:152]	Reserved	0x0
Bit [151:150]	Idle Power Scale (IPS)	0x0
Bit [149:144]	Reserved	0x0
Bit [143:128]	Idle Power (IDLP)	0x0
Bit [127:125]	Reserved	0x0
Bit [124:120]	Relative Write Latency (RWL)	0x4
Bit [119:117]	Reserved	0x0
Bit [116:112]	Relative Write Throughput (RWT)	0x4
Bit [111:109]	Reserved	0x0
Bit [108:104]	Relative Read Latency (RRL)	0x4
Bit [103:101]	Reserved	0x0
Bit [100:96]	Relative Read Throughput (RRT)	0x4
Bit [95:64]	Exit Latency (EXLAT)	0x9C40
Bit [63:32]	Entry Latency (ENLAT)	0x2710
Bit [31:26]	Reserved	0x0
Bit [25]	Non-Operational State (NOPS)	0x1
Bit [24]	Max Power Scale (MPS)	0x0
Bit [23:16]	Reserved	0x0
Bit [15:0]	Maximum Power (MP)	0x1F4
…	(N/A)	0
3071:3040	Power State 31 Descriptor (PSD31)	0
3107:3072	Vendor Specific (VS)	0x00
3109:3108	PLP Supported	0x8001
4095:3110	Vendor Specific (VS)	0x00

7. SMART ATTRIBUTES

Table 7-1 SMART Attributes (Log Identifier 02h)

Bytes Index	Bytes	Description
[0]	1	Critical Warning
[2:1]	2	Composite Temperature
[3]	1	Available Spare
[4]	1	Available Spare Threshold
[5]	1	Percentage Used
[31:6]	26	Reserved
[47:32]	16	Data Units Read
[63:48]	16	Data Units Written
[79:64]	16	Host Read Commands
[95:80]	16	Host Write Commands
[111:96]	16	Controller Busy Time
[127:112]	16	Power Cycles
[143:128]	16	Power On Hours
[159:144]	16	Unsafe Shutdowns
[175:160]	16	Media and Data Integrity Errors
[191:176]	16	Number of Error Information Log Entries
[195:192]	4	Warning Composite Temperature Time
[199:196]	4	Critical Composite Temperature Time
[201:200]	2	Temperature Sensor 1
[203:202]	2	Temperature Sensor 2
[205:204]	2	Temperature Sensor 3
[207:206]	2	Temperature Sensor 4
[209:208]	2	Temperature Sensor 5
[211:210]	2	Temperature Sensor 6
[213:212]	2	Temperature Sensor 7
[215:214]	2	Temperature Sensor 8
[219:216]	4	Thermal Management Temperature 1 Transition Count
[223:220]	4	Thermal Management Temperature 2 Transition Count
[227:224]	4	Total Time for Thermal Management Temperature 1
[231:228]	4	Total Time for Thermal Management Temperature 2
[511:232]	280	Reserved

8. PHYSICAL DIMENSIONS

Table 8-1 BGA SSD Physical Dimensions and Weight

Capacity	Height (mm)	Width (mm)	length (mm)	Weight (gram)
64GB	1.15	16	20	0.67
128GB	1.15	16	20	0.67
256GB	1.15	16	20	0.67
512GB	1.35	16	20	0.84
1TB	1.65	16	20	1

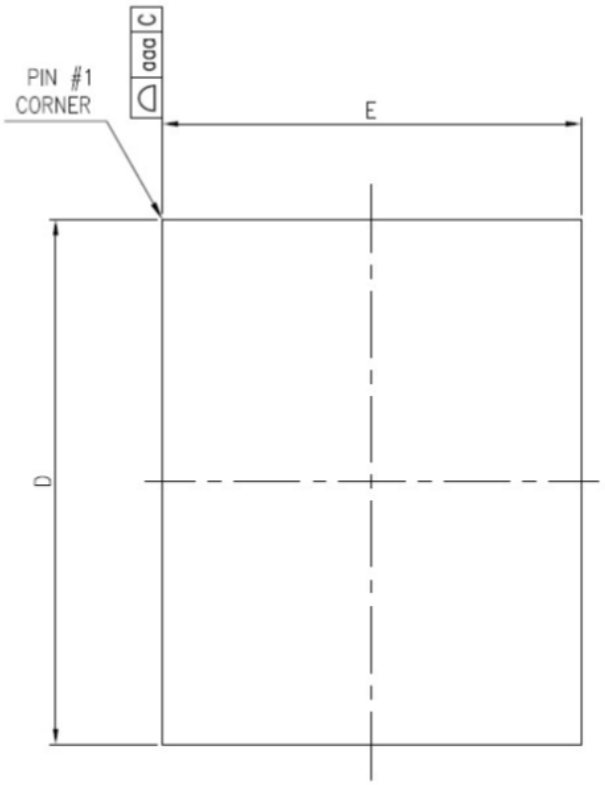

Figure 4 Top Physical View

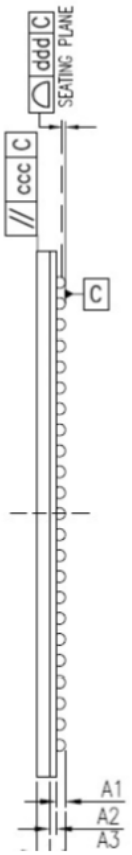

Figure 3 Side Physical View

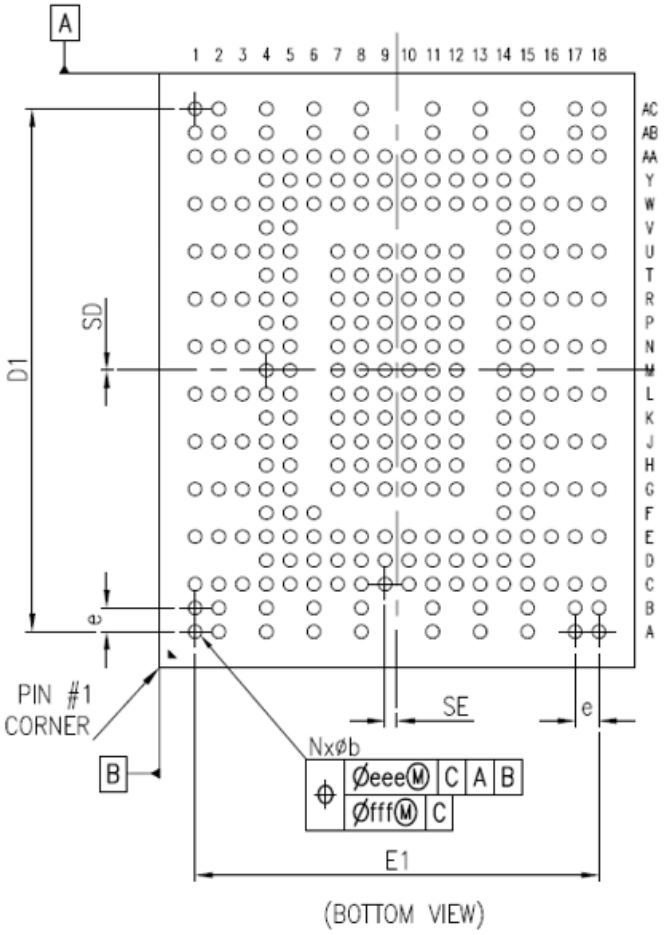

Figure 5 Bottom Physical View

Table 8-2 Package Specification: 64GB-256GB

	Symbol	Dimension in MM		
		Min	Nom	Max
Total Thickness	A	0.95	1.07	1.15
Stand Off	A1	0.30	0.35	0.40
Substrate Thickness	A2		0.22	
Mold Thickness	A3		0.50	
Body Size	D		20	
	E		16	
Ball Diameter			0.45	
Ball Opening			0.40	
Ball Width	B	0.40	0.45	0.50
Ball Pitch	E		0.80	
Ball Count	N		291	
Edge Ball Center to Center	D1		17.60 BSC.	
	E1		13.60 BSC	
Body Center to Contact Ball	SD		0.00 BSC	
	SE		0.40 BSC	
JEDEC (REF)			MO-216 (REF)	
Package Edge Tolerance	aaa		0.15	
Mold Flatness	ccc		0.20	
Coplanarity	ddd		0.20	
Ball Offset (Package)	eee		0.15	
Ball Offset (Ball)	fff		0.08	

© 2025 | Delkin Devices, Inc. | www.delkin.com | ISO 9001:2015

13350 Kirkham Way | Poway, CA 92064-7117 | Toll Free: 800.637.8087

Table 8-3 Package Specification: 512GB

	Symbol	Dimension in MM		
		Min	Nom	Max
Total Thickness	A	1.15	1.27	1.35
Stand Off	A1	0.30	0.35	0.40
Substrate Thickness	A2		0.22	
Mold Thickness	A3		0.70	
Body Size	D		20	
	E		16	
Ball Diameter			0.45	
Ball Opening			0.40	
Ball Width	B	0.40	0.45	0.50
Ball Pitch	E		0.80	
Ball Count	N		291	
Edge Ball Center to Center	D1		17.60 BSC.	
	E1		13.60 BSC	
Body Center to Contact Ball	SD		0.00 BSC	
	SE		0.40 BSC	
JEDEC (REF)			MO-216 (REF)	
Package Edge Tolerance	aaa		0.15	
Mold Flatness	ccc		0.20	
Coplanarity	ddd		0.20	
Ball Offset (Package)	eee		0.15	
Ball Offset (Ball)	fff		0.08	

© 2025 | Delkin Devices, Inc. | www.delkin.com | ISO 9001:2015

13350 Kirkham Way | Poway, CA 92064-7117 | Toll Free: 800.637.8087

Table 8-4 Package Specification: 1TB

	Symbol	Dimension in MM		
		Min	Nom	Max
Total Thickness	A	1.45	1.57	1.65
Stand Off	A1	0.30	0.35	0.40
Substrate Thickness	A2		0.22	
Mold Thickness	A3		1.00	
Body Size	D		20	
	E		16	
Ball Diameter			0.45	
Ball Opening			0.40	
Ball Width	B	0.40	0.45	0.50
Ball Pitch	E		0.80	
Ball Count	N		291	
Edge Ball Center to Center	D1		17.60 BSC.	
	E1		13.60 BSC	
Body Center to Contact Ball	SD		0.00 BSC	
	SE		0.40 BSC	
JEDEC (REF)			MO-216 (REF)	
Package Edge Tolerance	aaa		0.15	
Mold Flatness	ccc		0.20	
Coplanarity	ddd		0.20	
Ball Offset (Package)	eee		0.15	
Ball Offset (Ball)	fff		0.08	

NOTES:
1. All dimensions are in mm.
2. Ball designation is per JEP95, SECTION 3, SPP-010.
3. Fiducial Markings (Missing Fiducial location is A1 Corner Indicator).
4. A1 Triangle (orientation can vary and is non-critical).
5. DIM b is measured at the maximum solder ball diameter, parallel to primary datum Z.

WARNING: This product may contain chemicals known to the State of California to cause cancer, birth defects, or other reproductive harm. For more information go to www.p65warnings.ca.gov.