ESP32-P4

esp-dev-kits Documentation



Release master
Espressif Systems
Nov 02, 2026

Table of contents

Table of contents i

1 ESP32-P4X-Function-EV-Board 3
1.1 ESP32-P4X-Function-EV-Board . . . 3
1.1.1 Getting Started . . . 5
1.1.2 Hardware Reference . . . 13
1.1.3 Hardware Revision Details . . . 15
1.1.4 Related Documents . . . 15
1.1.5 Disclaimer and Copyright Notice . . . 16

2 ESP32-P4X-C5-Function-EV-Board 17
2.1 ESP32-P4X-C5-Function-EV-Board . . . 17
2.1.1 Board Overview . . . 17
2.1.2 Start Application Development . . . 23
2.1.3 Hardware Reference . . . 25
2.1.4 Hardware Revision Details . . . 26
2.1.5 Related Documents . . . 26
2.1.6 Disclaimer and Copyright Notice . . . 27

3 ESP32-P4X-EYE 29
3.1 ESP32-P4X-EYE . . . 29
3.1.1 Getting Started . . . 29
3.1.2 Hardware Reference . . . 36
3.1.3 Hardware Revision Details . . . 43
3.1.4 Related Documents . . . 43
3.1.5 Disclaimer and Copyright Notice . . . 43

4 EOL (End of Life) Boards 45
4.1 ESP32-P4-Function-EV-Board . . . 45
4.1.1 ESP32-P4-Function-EV-Board v1.5.2 . . . 45
4.2 ESP32-P4-EYE . . . 62
4.2.1 ESP32-P4-EYE . . . 62

5 Related Documentation and Resources 79
5.1 Developer Zone . . . 79
5.2 Products . . . 79
5.3 Contact Us . . . 79

6 Disclaimer and Copyright Notice 81
6.1 Terms of Use for Development Board . . . 81

This document provides detailed user guides and examples for ESP32-P4 series development boards.

Note: For the full list of Espressif development boards, please go to ESP DevKits.

Chapter 1

ESP32-P4X-Function-EV-Board

ESP32-P4X-Function-EV-Board is a multimedia development board based on the ESP32-P4 chip. ESP32-P4 chip features a dual-core RISC-V processor and supports up to 32 MB PSRAM. In addition, ESP32-P4 supports USB 2.0 specification, MIPI-CSI/DSI, H264 Encoder, and various other peripherals. With all of its outstanding features, the board is an ideal choice for developing low-cost, high-performance, low-power network-connected audio and video products.

1.1 ESP32-P4X-Function-EV-Board

Note: The ESP32-P4X-Function-EV-Board with the ESP32-P4 chip revision v3.1 does not support Secure Download. Please do not enable Secure Download Mode. For more details, please refer to ESP32-P4 Series SoC Errata > ROM-770.

To identify the embedded chip revision, refer to ESP32-P4 Series SoC Errata > Chip Revision Identification.

This user guide will help you get started with ESP32-P4X-Function-EV-Board and will also provide more in-depth information.

ESP32-P4X-Function-EV-Board is a multimedia development board based on the ESP32-P4 chip. ESP32-P4 chip features a dual-core RISC-V processor and supports up to 32 MB PSRAM. In addition, ESP32-P4 supports USB 2.0 specification, MIPI-CSI/DSI, H264 Encoder, and various other peripherals. With all of its outstanding features, the board is an ideal choice for developing low-cost, high-performance, low-power network-connected audio and video products.

The 2.4 GHz Wi-Fi 6 & Bluetooth 5 (LE) module ESP32-C6-MINI-1 serves as the Wi-Fi and Bluetooth module of the board. The board also includes a 7-inch capacitive touch screen with a resolution of 1024 x 600 and a 2MP camera with MIPI CSI, enriching the user interaction experience. The development board is suitable for prototyping a wide range of products, including visual doorbells, network cameras, smart home central control screens, LCD electronic price tags, two-wheel vehicle dashboards, etc.

Most of the I/O pins are broken out to the pin headers for easy interfacing. Developers can connect peripherals with jumper wires.

The document consists of the following major sections:

- *Getting Started*: Overview of ESP32-P4X-Function-EV-Board and hardware/software setup instructions to get started.
- *Hardware Reference*: More detailed information about the ESP32-P4X-Function-EV-Board' s hardware.
- *Hardware Revision Details*: Revision history, known issues, and links to user guides for previous versions (if any) of ESP32-P4X-Function-EV-Board.

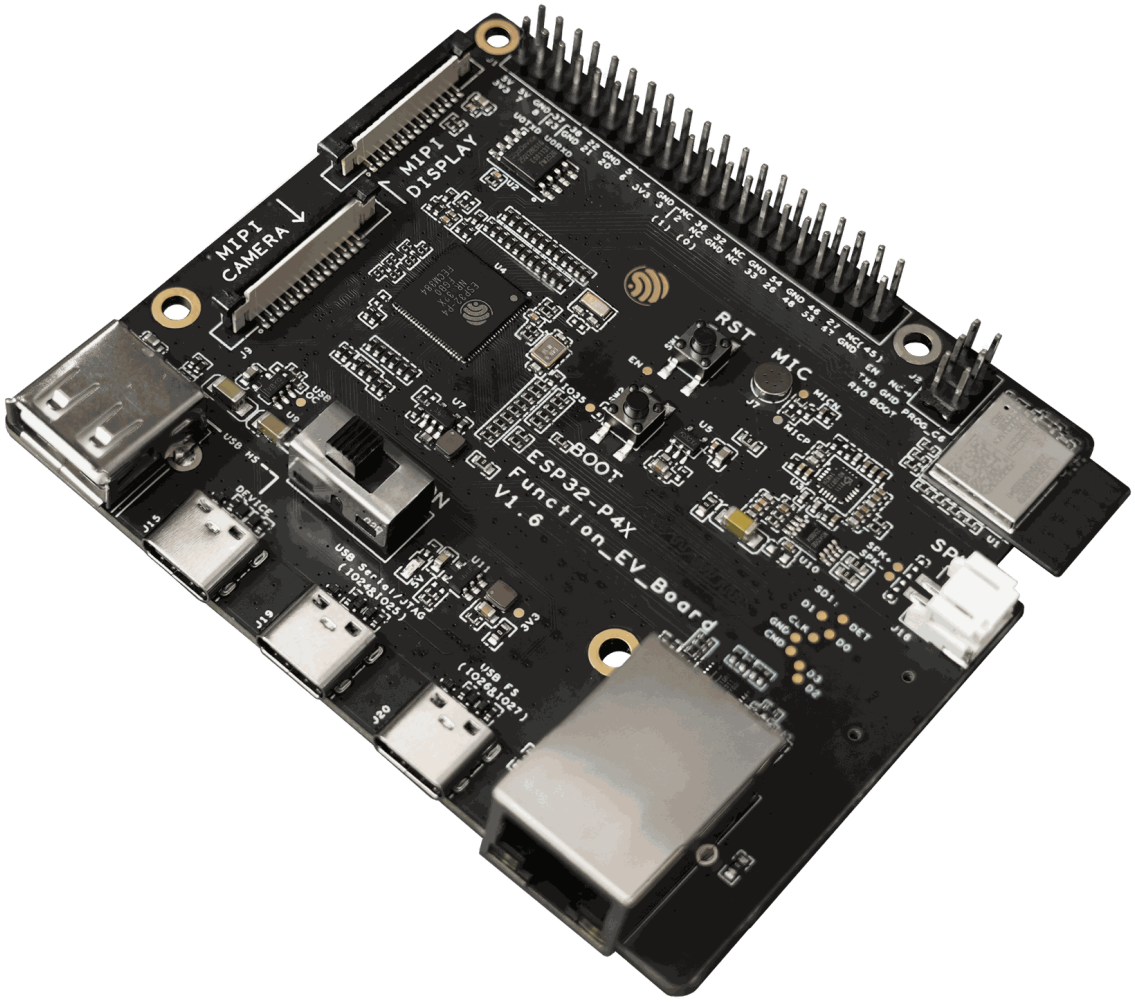

Fig. 1: ESP32-P4X-Function-EV-Board

- *Related Documents*: Links to related documentation.
- *Disclaimer and Copyright Notice*: Link to the disclaimer and copyright notice.

1.1.1 Getting Started

This section provides a brief introduction to ESP32-P4X-Function-EV-Board, instructions on how to do the initial hardware setup and how to flash firmware onto it.

Description of Components

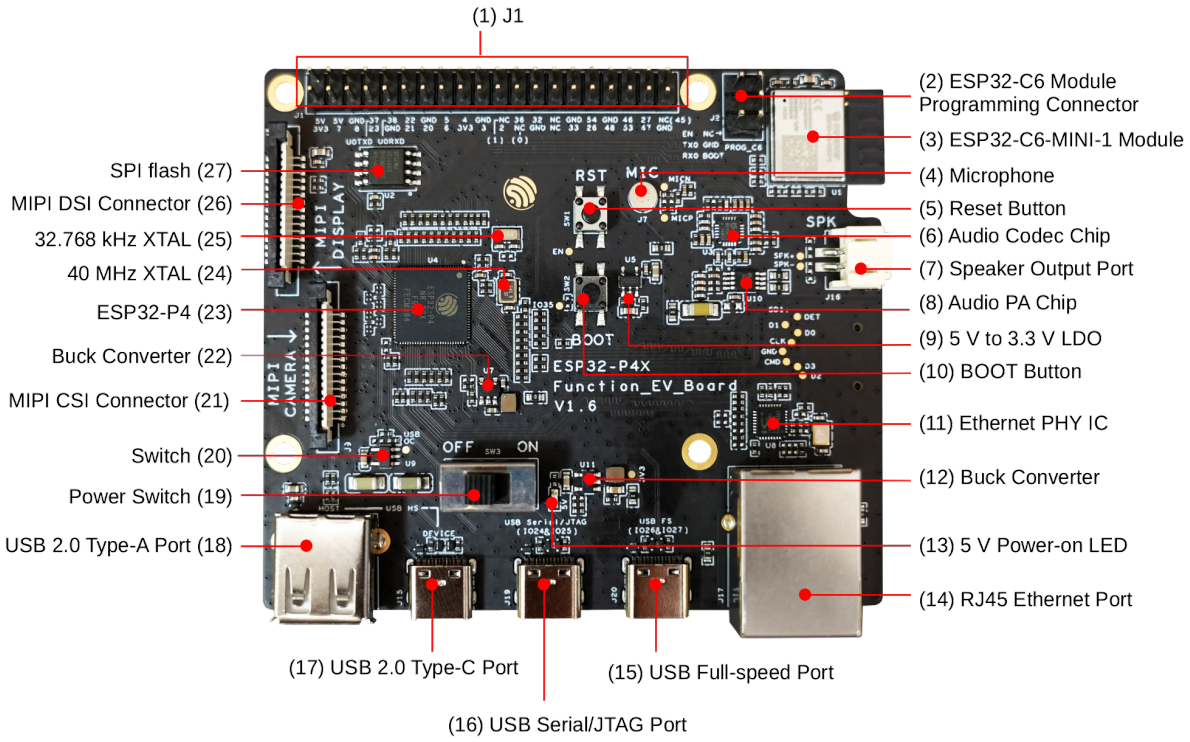

Fig. 2: ESP32-P4X-Function-EV-Board - front (click to enlarge)

The key components on the front and back of the board are described below, starting from J1 and proceeding clockwise.

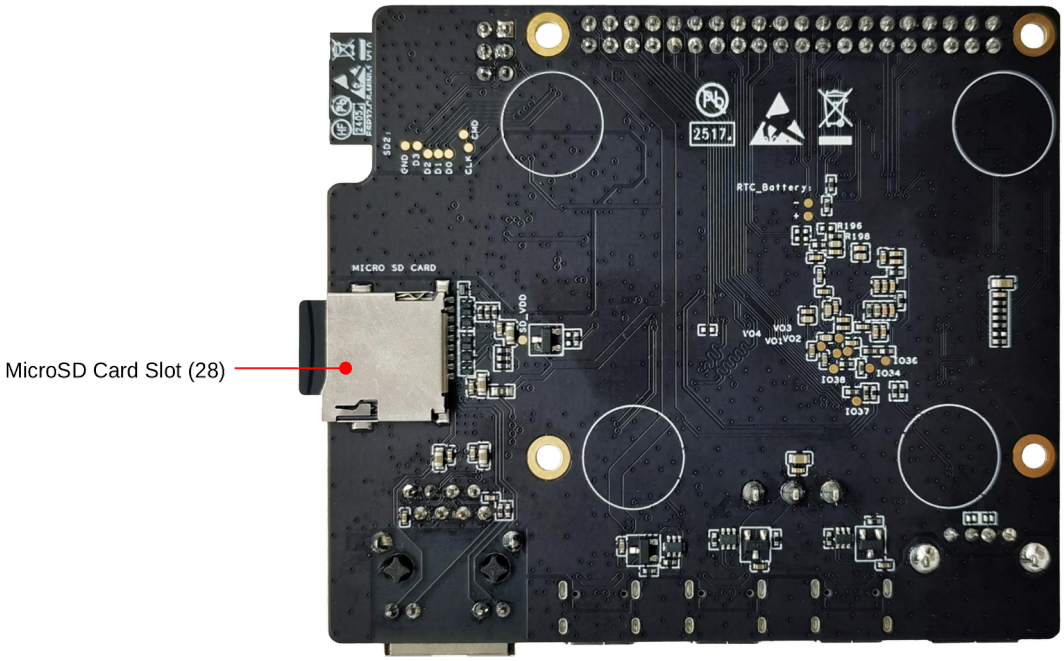

Fig. 3: ESP32-P4X-Function-EV-Board - back (click to enlarge)

No.	Key Component	Description
1	J1	All available GPIO pins are broken out to the header block J1 for easy interfacing. For more details, see *Header Block*.
2	ESP32-C6 Module Programming Connector	The connector can be used with ESP-Prog or other UART tools to flash firmware onto the ESP32-C6 module.
3	ESP32-C6-MINI-1 Module	This module serves as the Wi-Fi and Bluetooth communication module for the board.
4	Microphone	Onboard microphone connected to the Audio Codec Chip.
5	Reset Button	Resets the board.
6	Audio Codec Chip	ES8311 is a low-power mono audio codec chip. It includes a single-channel ADC, a single-channel DAC, a low-noise pre-amplifier, a headphone driver, digital sound effects, analog mixing, and gain functions. It interfaces with the ESP32-P4 chip over I2S and I2C buses to provide hardware audio processing independent of the audio application.
7	Speaker Output Port	This port is used to connect a speaker. The maximum output power can drive a 4 Ω, 3 W speaker. The pin spacing is 2.00 mm (0.08”).
8	Audio PA Chip	NS4150B is an EMI-compliant, 3 W mono Class D audio power amplifier that amplifies audio signals from the audio codec chip to drive speakers.
9	5 V to 3.3 V LDO	A power regulator that converts a 5 V supply to a 3.3 V output.
10	BOOT Button	The boot mode control button. Press the **Reset Button** while holding down the **Boot Button** to reset ESP32-P4 and enter firmware download mode. Firmware can then be downloaded to SPI flash via the USB Serial/JTAG Port.
11	Ethernet PHY IC	Ethernet PHY chip IP101GR connected to the ESP32-P4 EMAC RMII interface and RJ45 Ethernet Port.
12	Buck Converter	A buck DC-DC converter for the 3.3 V power supply.
13	5 V Power-on LED	This LED lights up when the board is powered through any USB Type-C port.
14	RJ45 Ethernet Port	An Ethernet Port supporting 10/100 Mbps adaptive.

No.	Key Component	Description
15	USB Full-speed Port	USB Type-C port that supports USB 2.0 Full-speed data rate. It can be used to power the board and serve as a communication interface.
16	USB Serial/JTAG Port	USB Type-C port that supports USB 2.0 Full-speed data rate. It can be used to flash firmware to the ESP32-P4 chip, communicate with the chip via the USB protocol, and perform JTAG debugging.
17	USB 2.0 Type-C Port	The USB 2.0 Type-C Port is connected to the USB 2.0 OTG High-Speed interface of ESP32-P4, compliant with the USB 2.0 specification. When communicating with other devices via this port, ESP32-P4 acts as a USB device connecting to a USB host. Please note that USB 2.0 Type-C Port and USB 2.0 Type-A Port cannot be used simultaneously. USB 2.0 Type-C Port can also be used for powering the board.
18	USB 2.0 Type-A Port	The USB 2.0 Type-A Port is connected to the USB 2.0 OTG High-Speed interface of ESP32-P4, compliant with the USB 2.0 specification. When communicating with other devices via this port, ESP32-P4 acts as a USB host, providing up to 500 mA of current. Please note that USB 2.0 Type-C Port and USB 2.0 Type-A Port cannot be used simultaneously.
19	Power Switch	Power On/Off Switch. Toggling toward the ON sign powers the board on (5 V), toggling away from the ON sign powers the board off.
20	Switch	TPS2051C is a USB power switch. When the USB 2.0 Type-A port is used for ESP32-P4 as a USB host to connect external USB devices, power must be supplied to those devices. TPS2051C limits the external supply current to within 500 mA, complying with the USB specification and preventing external devices from drawing excessive current. It also protects the development board from damage caused by short circuits or overloads on external devices.
21	MIPI CSI Connector	The FPC connector 1.0K-GT-15PB is used for connecting external camera modules to enable image transmission. For details, please refer to 1.0K-GT-15PB specification in Related Documents. FPC specifications: 1.0 mm pitch, 0.7 mm pin width, 0.3 mm thickness, 15 pins.
22	Buck Converter	A buck DC-DC converter for VDD_HP power supply of ESP32-P4.
23	ESP32-P4	A high-performance MCU with large internal memory and powerful image and voice processing capabilities.
24	40 MHz XTAL	An external precision 40 MHz crystal oscillator that serves as a clock for the system.
25	32.768 kHz XTAL	An external precision 32.768 kHz crystal oscillator that serves as a low-power clock while the chip is in deep-sleep mode.
26	MIPI DSI Connector	The FPC connector 1.0K-GT-15PB is used for connecting displays. For details, please refer to 1.0K-GT-15PB Specification in Related Documents. FPC specifications: 1.0 mm pitch, 0.7 mm pin width, 0.3 mm thickness, 15 pins.
27	SPI flash[1]	The 16 MB flash is connected to the chip via the SPI interface.
28	MicroSD Card Slot	The development board supports a MicroSD card in 4-bit mode and can store or play audio files from the MicroSD card.

Note: Usage notes for LDO_VO3 / LDO_VO4:

On the ESP32-P4X-Function-EV-Board, LDO_VO3 and LDO_VO4 are used to power certain on-board VDD domains. Users must configure the correct output voltage and enable state in software.

In Light-sleep or Deep-sleep mode, if LDO_VO3 / LDO_VO4 remain enabled, the system power consumption will be relatively high. Even when turned off, the total power consumption may still exceed the typical low-power specifications listed in the chip datasheet due to the board-level power architecture.

For applications with strict power consumption requirements, it is recommended to optimize the power architecture

[1] By default, the onboard SPI flash connected to the ESP32-P4 chip operates at a maximum clock frequency of 80 MHz and does not support the auto suspend feature. If you have a requirement for a higher flash clock frequency of 120 MHz or if you need the flash auto suspend feature, please contact us.

in custom hardware designs.

Accessories

Optionally, the following accessories are included in the package:

- LCD and its accessories (optional)
  - 7-inch capacitive touch screen with a resolution of 1024 x 600
  - LCD adapter board
  - Accessories bag, including DuPont wires, ribbon cable for LCD, long brass standoffs (20 mm in length), and short brass standoffs (8 mm in length)
- Camera and its accessories (optional)
  - 2MP camera with MIPI CSI
  - Camera adapter board
  - Ribbon cable for camera

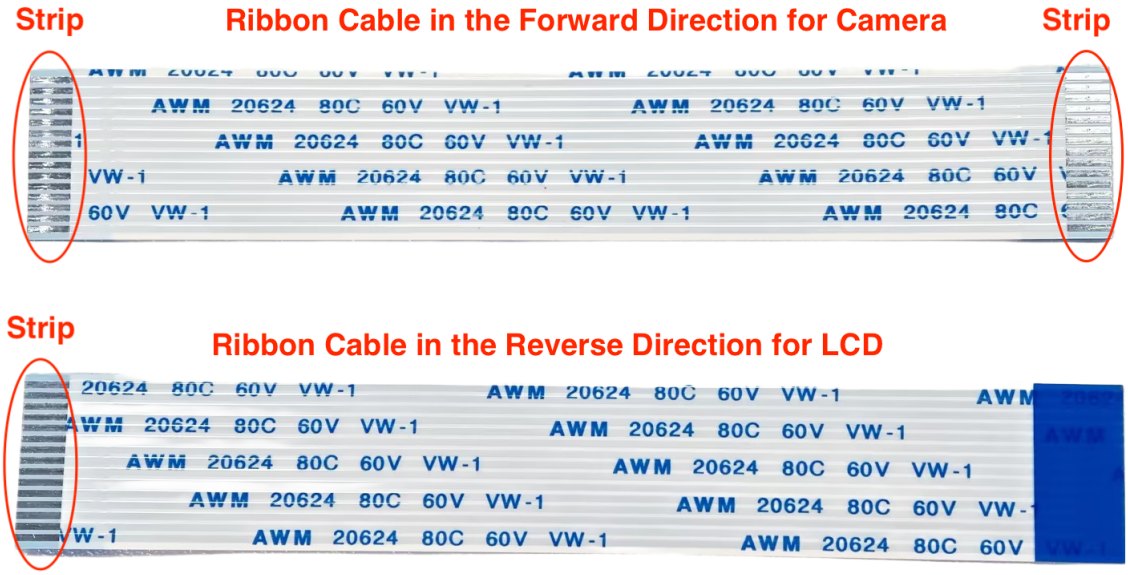

Fig. 4: Ribbon Cables in Forward and Reverse Directions

Note: Please note that the ribbon cable in the **forward direction**, whose strips at the two ends are on the same side, should be used for the **camera**; the ribbon cable in the **reverse direction**, whose strips at the two ends are on different sides, should be used for the **LCD**.

Application Examples

The following application examples are available for ESP32-P4X-Function-EV-Board:

- ESP_Brookesia Phone - Demonstrates an Android-like interface with multiple applications using ESP_Brookesia, utilizing MIPI-DSI, MIPI-CSI, ESP32-C6, SD card, and audio interfaces on a development board, providing a basis for efficient multimedia application development.
- LVGL Demo v8 - Demonstrates how to port LVGL v8 and conduct performance testing using LVGL' s built-in demos on an ESP32-P4X-Function-EV-Board with a 7-inch LCD screen, serving as a foundation for developing applications based on LVGL v8.

- LVGL Demo v9 - Demonstrates how to port LVGL v9 and conduct performance testing using LVGL' s built-in demos on an ESP32-P4X-Function-EV-Board, serving as a basis for developing applications based on LVGL v9.

For more examples and the latest updates, please refer to the examples folder.

Alternatively, you can try the factory demo and other prebuilt examples directly in your web browser using ESP Launchpad. ESP Launchpad provides a convenient way to flash firmware to your board without installing ESP-IDF or compiling the source code.

To explore the application examples or to develop your own, please follow the steps outlined in the *Start Application Development* section.

Start Application Development

Before powering up your ESP32-P4X-Function-EV-Board, please make sure that it is in good condition with no obvious signs of damage.

Required Hardware

- ESP32-P4X-Function-EV-Board
- USB cables
- Computer running Windows, Linux, or macOS

Note: Be sure to use a good quality USB cable. Some cables are for charging only and do not provide the needed data lines nor work for programming the boards.

Optional Hardware

- MicroSD card

Hardware Setup Connect the ESP32-P4X-Function-EV-Board to your computer using a USB cable. The board can be powered through any of the USB Type-C ports. The USB Serial/JTAG Port is recommended for flashing firmware and debugging.

The figure below shows the overall appearance of the development board, LCD adapter board, and camera once fully assembled. The components description is available in *Components Description of Fully Assembled ESP32-P4X-Function-EV-Board*.

To connect the LCD, follow these steps:

1. Secure the development board to the LCD adapter board by attaching the short brass standoffs (8 mm in length) to the four standoff posts at the center of the LCD adapter board.
2. Connect the J3 header of the LCD adapter board to the MIPI DSI connector on the ESP32-P4X-Function-EV-Board using the LCD ribbon cable (**reverse direction**). Note that the LCD adapter board is already connected to the LCD.
3. Use a DuPont wire to connect the GPIO27 pin of the J1 header on the ESP32-P4X-Function-EV-Board to the RST_LCD pin of the J6 header on the LCD adapter board. The GPIO mapped to RST_LCD can be configured via software, with GPIO27 set as the default.
4. Use a DuPont wire to connect the GPIO26 pin of the J1 header on the ESP32-P4X-Function-EV-Board to the PWM pin of the J6 header on the LCD adapter board. The GPIO mapped to PWM can be configured via software, with GPIO26 set as the default.
5. It is recommended to power the LCD by connecting a USB cable to the J1 header of the LCD adapter board. If this is not feasible, use DuPont wires to connect the 5V and GND pins of the J1 header on the ESP32-P4X-Function-EV-Board to the 5V and GND pins of the LCD adapter board, provided that the development board has sufficient power supply.

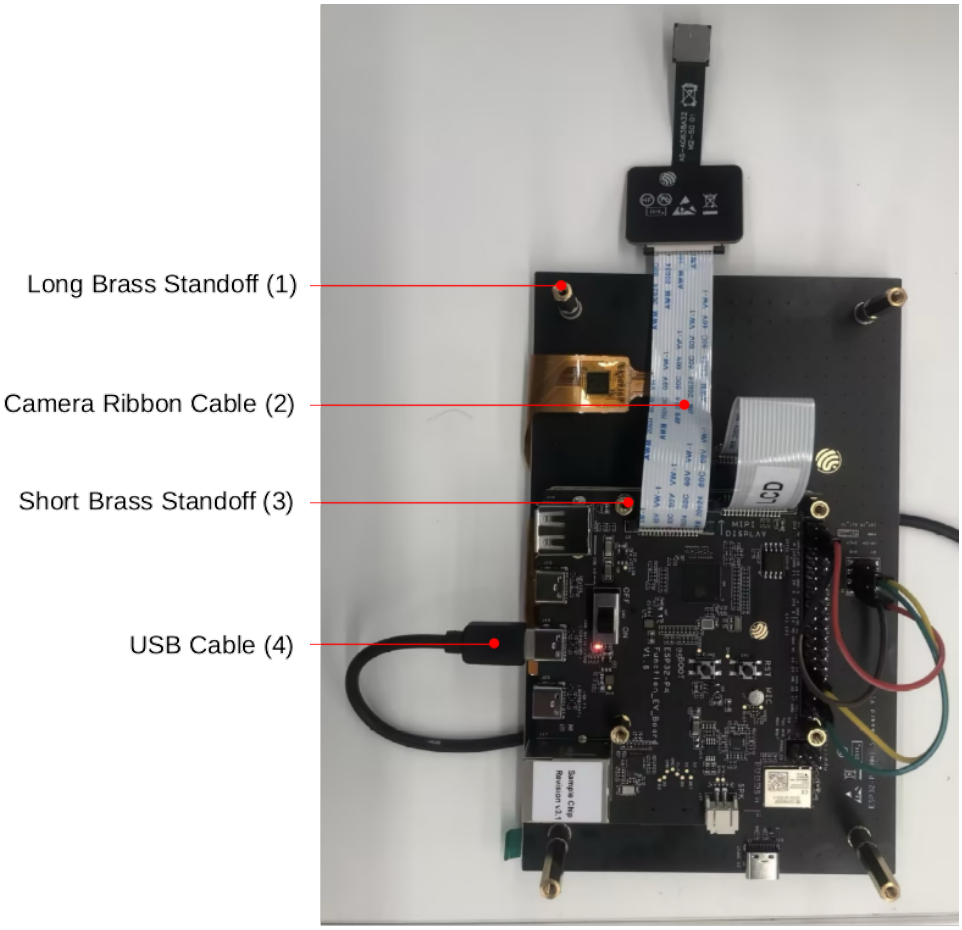

Fig. 5: Fully assembled ESP32-P4X-Function-EV-Board

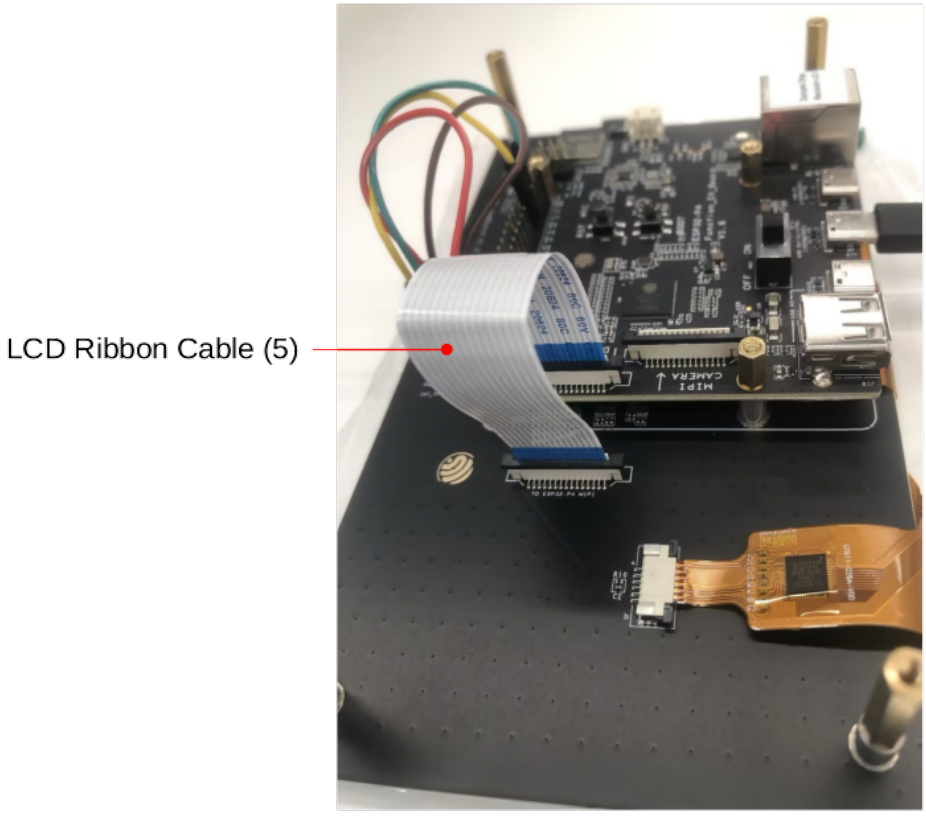

Fig. 6: LCD ribbon cable details

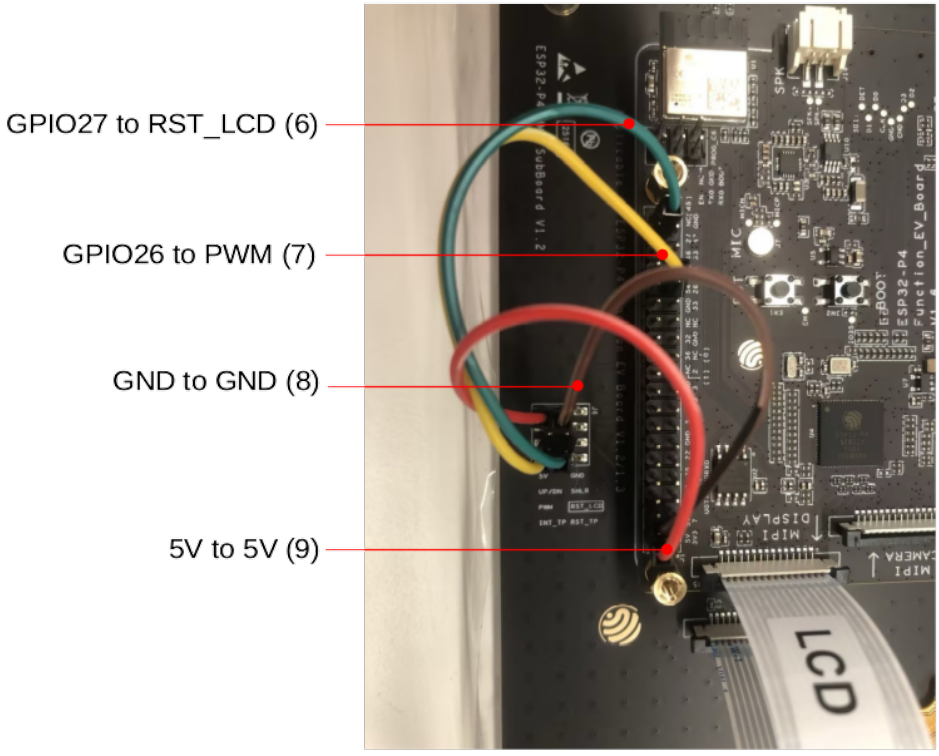

Fig. 7: DuPont wire connections

In summary, the ESP32-P4X-Function-EV-Board and the LCD adapter board are connected via the following pins:

Table 1: DuPont Wire Connections

ESP32-P4X-Function-EV-Board	LCD Adapter Board
MIPI DSI connector	J3 header
GPIO27 pin of J1 header	RST_LCD pin of J6 header
GPIO26 pin of J1 header	PWM pin of J6 header
5V pin of J1 header	5V pin of J6 header
GND pin of J1 header	GND pin of J6 header

6. Attach the long brass standoffs (20 mm in length) to the four standoff posts on the periphery of the LCD adapter board to allow the LCD to stand upright.

Note:

- If you power the LCD adapter board by connecting a USB cable to its J1 header, you do not need to connect its 5V and GND pins to the corresponding pins on the development board.
- To use the camera, connect the camera adapter board to the MIPI CSI connector on the development board using the camera ribbon cable (**forward direction**).

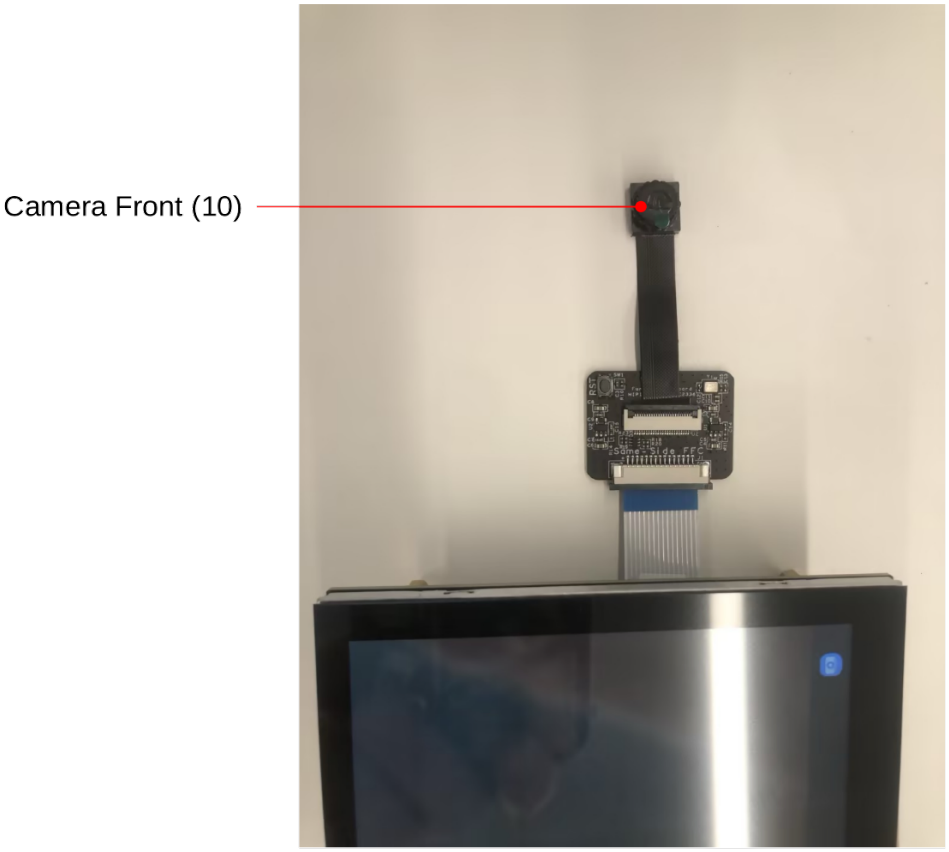

Fig. 8: Camera

Table 2: Components Description of Fully Assembled ESP32-P4X-Function-EV-Board

Component Number	Main Component
1	Long Brass Standoff
2	Camera Ribbon Cable
3	Short Brass Standoff
4	USB Cable
5	LCD Ribbon Cable
6	GPIO27 to RST_LCD
7	GPIO26 to PWM
8	GND to GND
9	5V to 5V
10	Camera Front

Software Setup To set up your development environment and flash an application example onto your board, please follow the instructions in ESP-IDF Get Started.

Contents and Packaging

Ordering Information The development board is available in the variant listed in the table below.

Part Number	On-board Module	Flash	PSRAM	Antenna
ESP32-P4X-Function-EV-Board	ESP32-C6-MINI-1	16 MB	32 MB	PCB on-board antenna

For more information about available variants, visit the ESP Product Selector and select the **Development Board** tab. If you cannot find the variant you need in the table or Product Selector, or if you have special customization requirements, contact Espressif Sales.

Retail Orders If you order a few samples, each board comes in an individual package in either antistatic bag or any packaging depending on your retailer.

For retail orders, please go to https://www.espressif.com/en/company/contact/buy-a-sample.

Wholesale Orders If you order in bulk, the boards come in large cardboard boxes.

For wholesale orders, please go to https://www.espressif.com/en/contact-us/sales-questions.

1.1.2 Hardware Reference

Block Diagram

The block diagram below shows the components of ESP32-P4X-Function-EV-Board and their interconnections.

Power Supply Options

Power can be supplied through any of the following ports:

- USB 2.0 Type-C Port
- USB Full-speed Port
- USB Serial/JTAG Port

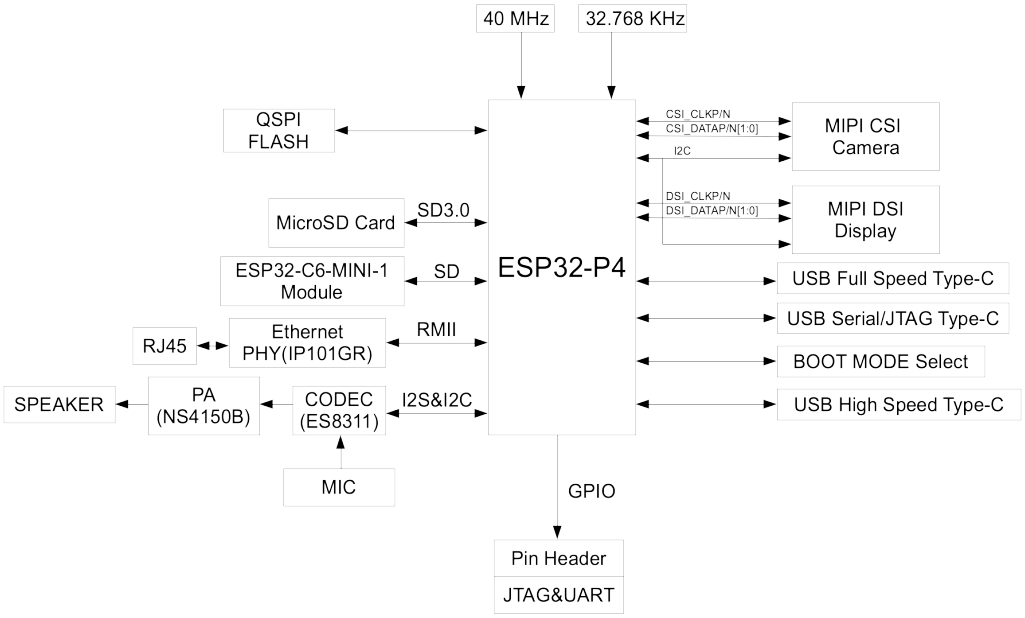

Fig. 9: ESP32-P4X-Function-EV-Board Block Diagram (click to enlarge)

If the USB cable used for debugging cannot provide enough current, you can connect the board to a power adapter via any available USB Type-C port.

Header Block

The table below provides the **Name** and **Function** of the pin header J1 of the board. The pin header names are shown in Figure *ESP32-P4X-Function-EV-Board - front (click to enlarge)*. The numbering is the same as in the schematic of ESP32-P4X-Function-EV-Board Reference Design.

No.	Name	Type[Page 15, 2]	Function
1	3V3	P	3.3 V power supply
2	5V	P	5 V power supply
3	7	I/O/T	GPIO7
4	5V	P	5 V power supply
5	8	I/O/T	GPIO8
6	GND	GND	Ground
7	23	I/O/T	GPIO23
8	37	I/O/T	U0TXD, GPIO37
9	GND	GND	Ground
10	38	I/O/T	U0RXD, GPIO38
11	21	I/O/T	GPIO21
12	22	I/O/T	GPIO22
13	20	I/O/T	GPIO20
14	GND	GND	Ground

continues on next page

Table 3 – continued from previous page

No.	Name	Type[Page 15, 2]	Function
15	6	I/O/T	GPIO6
16	5	I/O/T	GPIO5
17	3V3	P	3.3 V power supply
18	4	I/O/T	GPIO4
19	3	I/O/T	GPIO3
20	GND	GND	Ground
21	2	I/O/T	GPIO2
22	NC(1)	I/O/T	GPIO1[3]
23	NC(0)	I/O/T	GPIO0[3]
24	36	I/O/T	GPIO36
25	GND	GND	Ground
26	32	I/O/T	GPIO32
27	NC	–	No connection
28	NC	–	No connection
29	33	I/O/T	GPIO33
30	GND	GND	Ground
31	26	I/O/T	GPIO26
32	54	I/O/T	GPIO54
33	48	I/O/T	GPIO48
34	GND	GND	Ground
35	53	I/O/T	GPIO53
36	46	I/O/T	GPIO46
37	47	I/O/T	GPIO47
38	27	I/O/T	GPIO27
39	GND	GND	Ground
40	NC(45)	I/O/T	GPIO45[4]

J1

1.1.3 Hardware Revision Details

The difference between the ESP32-P4X-Function-EV-Board and the *ESP32-P4-Function-EV-Board* is that the main chip on the former has been upgraded to the ESP32-P4 chip revision v3.1 or later version.

1.1.4 Related Documents

Please download the following documents from the HTML version of esp-dev-kits Documentation.

- ESP32-P4X-Function-EV-Board Reference Design (ZIP)
- ESP32-P4 Series SoC Errata
- 1.0K-GT-15PB Specification (PDF)
- Camera Datasheet (PDF)
- Display Datasheet (PDF)
- Datasheet of display driver chip EK73217BCGA (PDF)
- Datasheet of display driver chip EK79007AD (PDF)
- LCD Adapter Board Schematic (PDF)
- LCD Adapter Board PCB Layout (PDF)
- Camera Adapter Board Schematic (PDF)
- Camera Adapter Board PCB Layout (PDF)
- LCD Adapter Board Reference Design (ZIP)

[2] P: Power supply; I: Input; O: Output; T: High impedance.

[3] GPIO0 and GPIO1 can be enabled by disabling the XTAL_32K function, which can be achieved by moving R61 and R59 to R199 and R197, respectively.

[4] GPIO45 can be enabled by disabling the SD_PWRn function, which can be achieved by moving R231 to R100.

- Camera Adapter Board Reference Design (ZIP)

For further design documentation for the board, please contact us at sales@espressif.com.

1.1.5 Disclaimer and Copyright Notice

See *Disclaimer and Copyright Notice*.

Chapter 2

ESP32-P4X-C5-Function-EV-Board

ESP32-P4X-C5-Function-EV-Board is a multimedia development board based on the ESP32-P4 chip. ESP32-P4 chip features a dual-core RISC-V processor and supports up to 32 MB PSRAM. In addition, ESP32-P4 supports USB 2.0 specification, MIPI-CSI/DSI, H264 Encoder, and various other peripherals. The board is equipped with the ESP32-C5-MINI-1 module, which supports 2.4 GHz & 5 GHz dual-band Wi-Fi 6 and Bluetooth 5 (LE), for Wi-Fi and Bluetooth communication. With all of its outstanding features, the board is an ideal choice for developing low-cost, high-performance, low-power network-connected audio and video products.

2.1 ESP32-P4X-C5-Function-EV-Board

This user guide will help you get started with ESP32-P4X-C5-Function-EV-Board and will also provide more in-depth information.

The document consists of the following major sections:

- *Board Overview*: A brief introduction to the board' s software and hardware
- *Start Application Development*: Hardware and software setup for application development
- *Hardware Reference*: Detailed information about the board' s hardware
- *Hardware Revision Details*: Hardware revision history and known issues, with links to user guides for previous board versions (if any)
- *Related Documents*: Links to related documentation
- *Disclaimer and Copyright Notice*: Link to the disclaimer and copyright notice.

2.1.1 Board Overview

ESP32-P4X-C5-Function-EV-Board is a multimedia development board based on the ESP32-P4 chip. ESP32-P4 features a dual-core RISC-V processor and supports up to 32 MB PSRAM. In addition, ESP32-P4 supports USB 2.0 specification, MIPI-CSI/DSI, H264 Encoder, and various other peripherals, meeting the development needs of low-cost, high-performance, low-power multimedia products.

The board is equipped with the ESP32-C5-MINI-1 module, which supports 2.4 GHz & 5 GHz dual-band Wi-Fi 6 and Bluetooth 5 (LE) for Wi-Fi and Bluetooth communication. The board also includes a 7-inch capacitive touch screen with a resolution of 1024 x 600 and a 2MP camera with MIPI CSI, enriching the user interaction experience. The development board is suitable for prototyping a wide range of products, including visual doorbells, network cameras, smart home central control screens, LCD electronic price tags, two-wheel vehicle dashboards, etc.

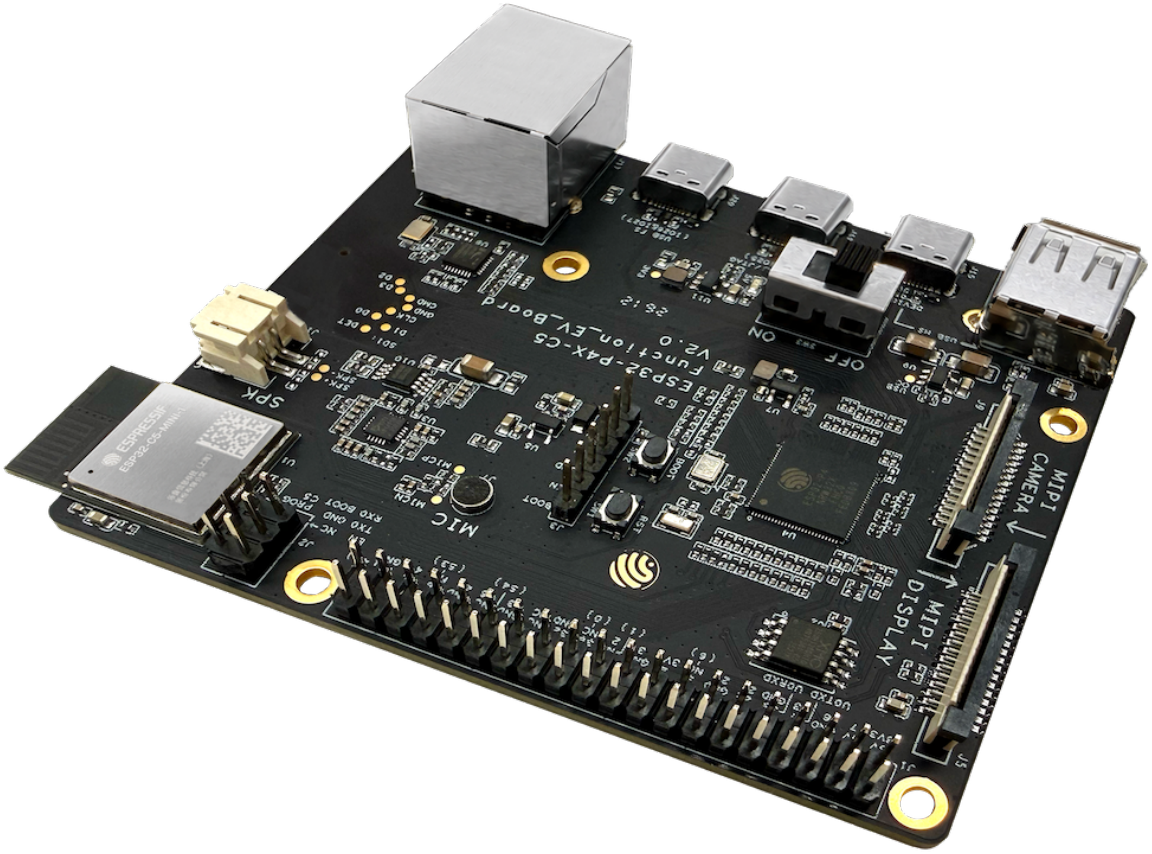

Fig. 1: ESP32-P4X-C5-Function-EV-Board (with ESP32-C5-MINI-1 module)

Feature List

The board has the following features:

- **Main SoC**: ESP32-P4, a dual-core RISC-V processor with 16 MB SPI flash and 32 MB PSRAM on board
- **On-board Module**: ESP32-C5-MINI-1, supports 2.4 GHz & 5 GHz dual-band Wi-Fi 6, Bluetooth 5 (LE), and IEEE 802.15.4
- **Display**: MIPI DSI interface, can connect a 7-inch capacitive touch screen (1024 × 600)
- **Camera**: MIPI CSI interface, can connect a 2MP camera
- **Audio**: ES8311 audio codec chip, NS4150B audio power amplifier, onboard microphone, speaker output port
- **Storage**: MicroSD card slot (4-bit mode)
- **USB**: USB 2.0 OTG Type-C port, USB 2.0 Type-A port, USB Full-Speed port, USB Serial/JTAG port
- **Network**: RJ45 Ethernet port (10/100 Mbps adaptive)
- **Expansion**: J1 header with available GPIO pins broken out
- **Buttons**: BOOT button and Reset button

Block Diagram

The block diagram below shows the components of ESP32-P4X-C5-Function-EV-Board and their interconnections.

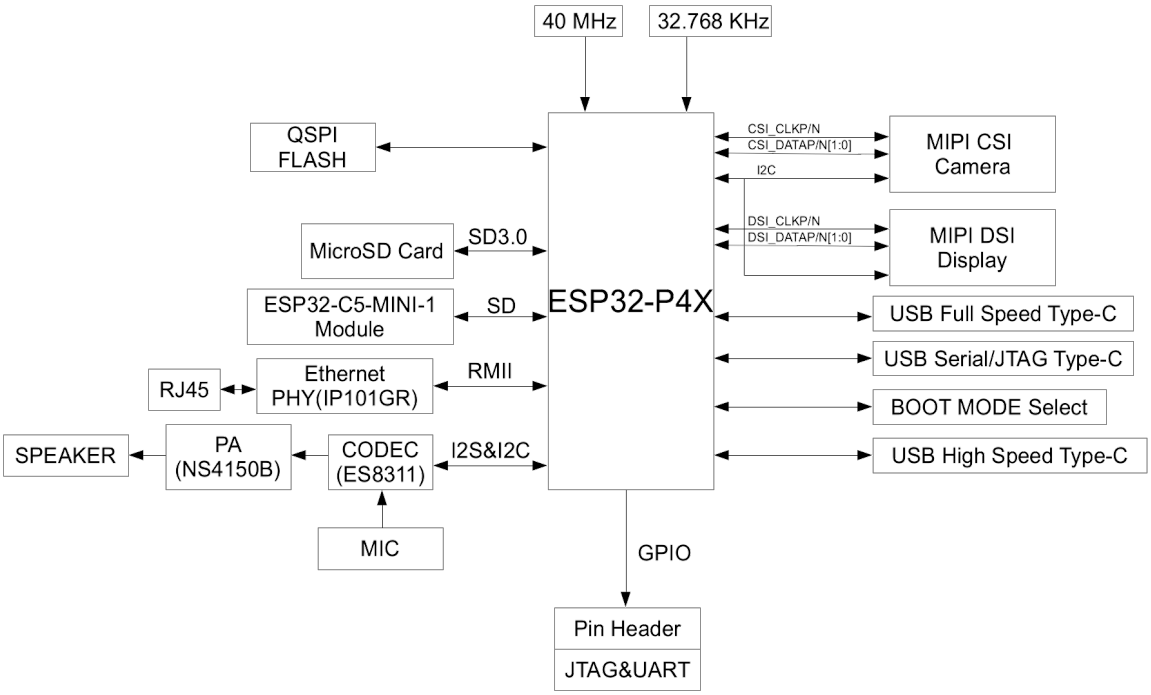

Fig. 2: ESP32-P4X-C5-Function-EV-Board block diagram

Description of Components

The key components on the front and back of the board are described below, starting from J1 and proceeding clockwise.

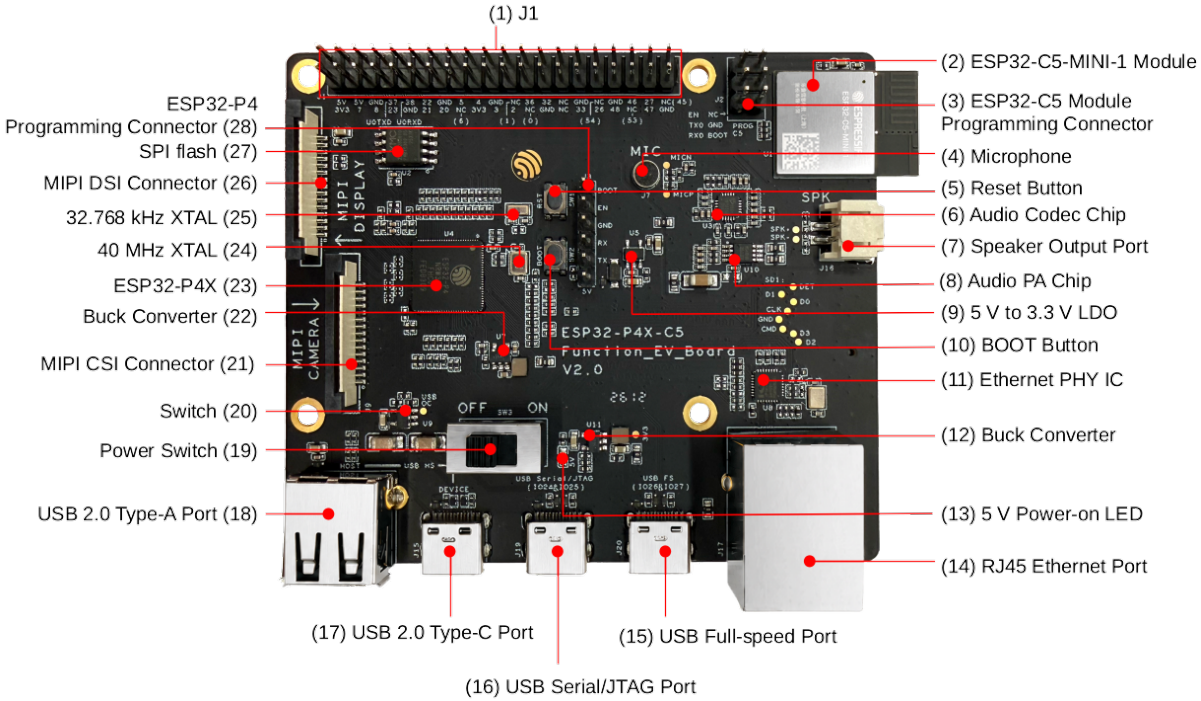

Fig. 3: ESP32-P4X-C5-Function-EV-Board - front

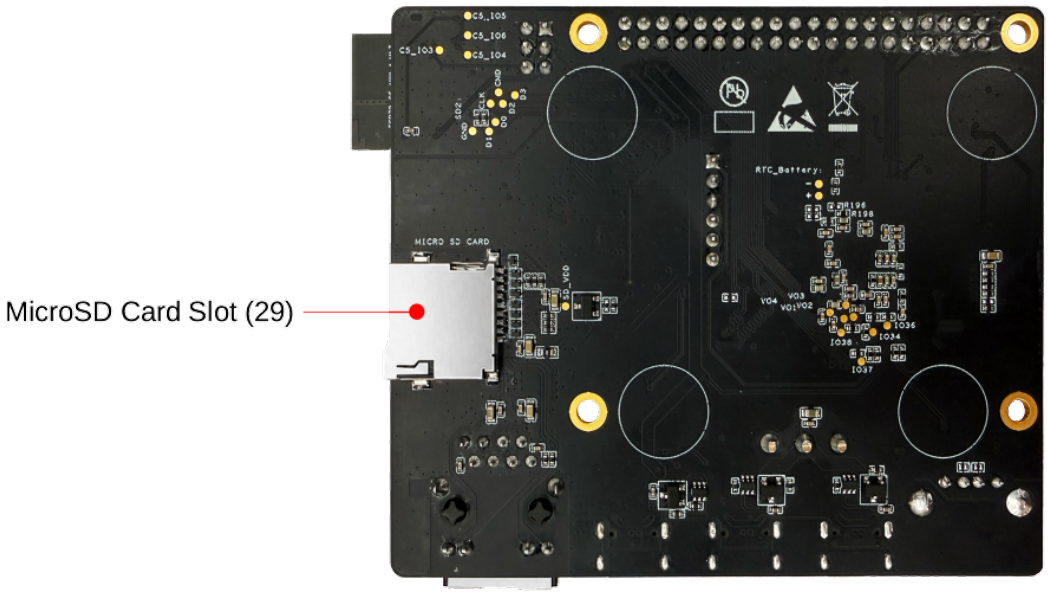

Fig. 4: ESP32-P4X-C5-Function-EV-Board - back

No.	Key Component	Description
1	J1	All available GPIO pins are broken out to the header block J1 for easy interfacing. For more details, see *Header Block*.
2	ESP32-C5-MINI-1 Module	This module serves as the Wi-Fi and Bluetooth communication module for the board.
3	ESP32-C5 Module Programming Connector	The connector can be used with ESP-Prog or other UART tools to flash firmware onto the ESP32-C5 module.
4	Microphone	Onboard microphone connected to the Audio Codec Chip.
5	Reset Button	Resets the board.
6	Audio Codec Chip	ES8311 is a low-power mono audio codec chip. It includes a single-channel ADC, a single-channel DAC, a low-noise pre-amplifier, a headphone driver, digital sound effects, analog mixing, and gain functions. It interfaces with the ESP32-P4 chip over I2S and I2C buses to provide hardware audio processing independent of the audio application.
7	Speaker Output Port	This port is used to connect a speaker. The maximum output power can drive a 4 Ω, 3 W speaker. The pin spacing is 2.00 mm (0.08”).
8	Audio PA Chip	NS4150B is a low EMI, 3 W mono Class D audio power amplifier that amplifies audio signals from the audio codec chip to drive speakers.
9	5 V to 3.3 V LDO	A power regulator that converts a 5 V supply to a 3.3 V output.
10	BOOT Button	The boot mode control button. Press the **Reset Button** while holding down the **BOOT Button** to reset ESP32-P4 and enter firmware download mode. Firmware can then be downloaded to onboard SPI flash via the USB Serial/JTAG Port.
11	Ethernet PHY IC	Ethernet PHY chip IP101GR connected to the ESP32-P4 EMAC RMII interface and RJ45 Ethernet Port.
12	Buck Converter	A buck DC-DC converter for the 3.3 V power supply.
13	5 V Power-on LED	This LED lights up when the board is powered through any USB Type-C port.
14	RJ45 Ethernet Port	Ethernet port supporting 10/100 Mbps adaptive.
15	USB Full-speed Port	USB Type-C port that supports USB 2.0 Full-speed data rate. It can be used to power the board and serve as a communication interface.
16	USB Serial/JTAG Port	USB Type-C port that supports USB 2.0 Full-speed data rate. It can be used to flash firmware to the ESP32-P4 chip, communicate with the chip via the USB protocol, and perform JTAG debugging.
17	USB 2.0 Type-C Port	The USB 2.0 Type-C Port is connected to the USB 2.0 OTG High-Speed interface of ESP32-P4, compliant with the USB 2.0 specification. When communicating with other devices via this port, ESP32-P4 acts as a USB device connecting to a USB host. Please note that the USB 2.0 Type-C Port and USB 2.0 Type-A Port cannot be used simultaneously. This port can also be used for powering the board.
18	USB 2.0 Type-A Port	The USB 2.0 Type-A Port is connected to the USB 2.0 OTG High-Speed interface of ESP32-P4, compliant with the USB 2.0 specification. When communicating with other devices via this port, ESP32-P4 acts as a USB host, providing up to 500 mA of current. Please note that the USB 2.0 Type-C Port and USB 2.0 Type-A Port cannot be used simultaneously.

No.	Key Component	Description
19	Power Switch	Power On/Off Switch. Toggling toward the ON sign powers the board on (5 V); toggling away from the ON sign powers the board off.
20	Switch	TPS2051C is a USB power switch. When the USB 2.0 Type-A port is used for ESP32-P4 as a USB host to connect external USB devices, power must be supplied to those devices. TPS2051C limits the external supply current to within 500 mA, complying with the USB specification and preventing external devices from drawing excessive current. It also protects the development board from damage caused by short circuits or overloads on external devices.
21	MIPI CSI Connector	The FPC connector 1.0K-GT-15PB is used for connecting external camera modules to enable image transmission. For details, please refer to the 1.0K-GT-15PB specification in Related Documents. FPC specifications: 1.0 mm pitch, 0.7 mm pin width, 0.3 mm thickness, 15 pins.
22	Buck Converter	A buck DC-DC converter for the VDD_HP power supply of ESP32-P4.
23	ESP32-P4	A high-performance MCU with large internal memory and powerful image and voice processing capabilities.
24	40 MHz XTAL	40 MHz crystal oscillator that provides the system clock.
25	32.768 kHz XTAL	32.768 kHz crystal oscillator that provides a low-power clock for Deep-sleep mode.
26	MIPI DSI Connector	The FPC connector 1.0K-GT-15PB is used for connecting the LCD adapter board. For details, please refer to the 1.0K-GT-15PB specification in Related Documents. FPC specifications: 1.0 mm pitch, 0.7 mm pin width, 0.3 mm thickness, 15 pins.
27	SPI flash[1]	16 MB flash connected to the ESP32-P4 chip via the SPI interface.
28	ESP32-P4 Programming Connector	The connector can be used with ESP-Prog or other UART tools to flash firmware onto the ESP32-P4 chip revision v3.x and later.
29	MicroSD Card Slot	The development board supports a MicroSD card in 4-bit mode and can store or play audio files from the MicroSD card.

Note: Usage notes for LDO_VO3 / LDO_VO4:

On the ESP32-P4X-C5-Function-EV-Board, LDO_VO3 and LDO_VO4 are used to power certain on-board VDD domains. Users must configure the correct output voltage and enable state in software.

In Light-sleep or Deep-sleep mode, if LDO_VO3 / LDO_VO4 remain enabled, the system power consumption will be relatively high. Even when turned off, the total power consumption may still exceed the typical low-power specifications listed in the chip datasheet due to the board-level power architecture.

For applications with strict power consumption requirements, it is recommended to optimize the power architecture in custom hardware designs.

Accessories

Optionally, the following accessories are included in the package:

- LCD and its accessories (optional)
  - 7-inch capacitive touch screen with a resolution of 1024 x 600
  - LCD adapter board
  - Accessories bag, including DuPont wires, ribbon cable for LCD, long brass standoffs (20 mm in length), and short brass standoffs (8 mm in length)
- Camera and its accessories (optional)

[1] By default, the onboard SPI flash connected to the ESP32-P4 chip operates at a maximum clock frequency of 80 MHz and does not support the auto suspend feature. If you have a requirement for a higher flash clock frequency of 120 MHz or if you need the flash auto suspend feature, please contact us.

  - 2MP camera with MIPI CSI
  - Camera adapter board
  - Ribbon cable for camera

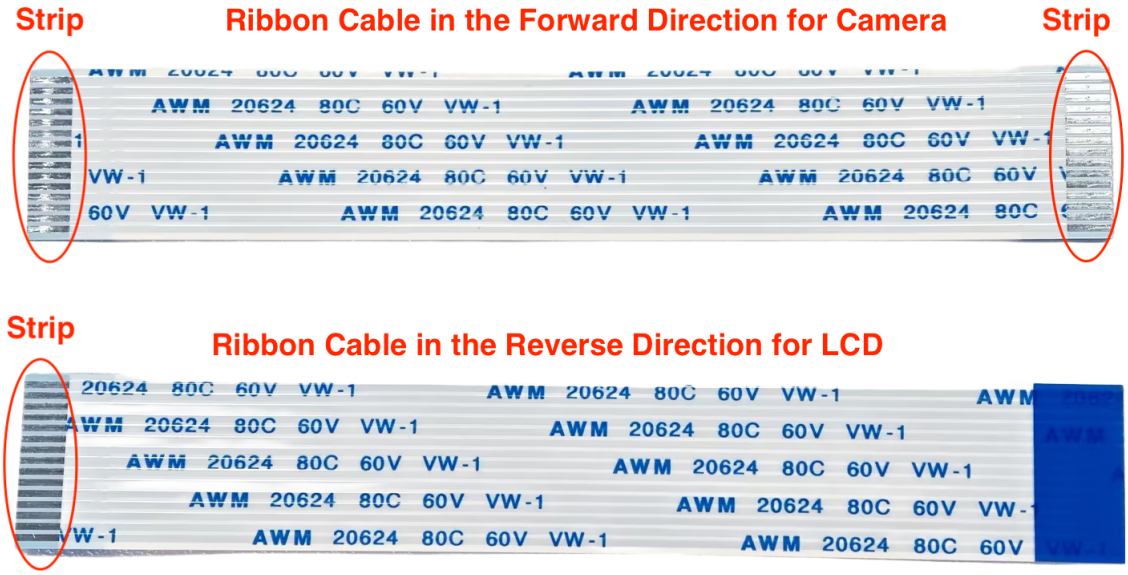

Fig. 5: Ribbon Cables in Forward and Reverse Directions

Note: Please note that the ribbon cable in the **forward direction**, whose strips at the two ends are on the same side, should be used for the **camera**; the ribbon cable in the **reverse direction**, whose strips at the two ends are on different sides, should be used for the **LCD**.

Application Examples

The following application examples are available for ESP32-P4X-C5-Function-EV-Board:

- ESP_Brookesia Phone - Demonstrates an Android-like interface with multiple applications using ESP_Brookesia, utilizing MIPI-DSI, MIPI-CSI, ESP32-C5, SD card, and audio interfaces on the development board, providing a basis for efficient multimedia application development.

Alternatively, you can try the factory demo and other prebuilt examples directly in your web browser using ESP Launchpad. ESP Launchpad provides a convenient way to flash firmware to your board without installing ESP-IDF or compiling the source code.

To explore the application examples or to develop your own, please follow the steps outlined in the *Start Application Development* section.

2.1.2 Start Application Development

This section describes how to set up the hardware and software, and how to flash firmware onto the development board for application development.

Required Hardware

- ESP32-P4X-C5-Function-EV-Board
- USB cable
- Computer running Windows, Linux, or macOS

Note: Be sure to use a USB cable that supports data transfer. Some cables are for charging only and cannot be used for data transfer or programming.

Optional Hardware

- MicroSD card

Power Supply Options

The board can be powered in any of the following three ways:

- Via the **USB 2.0 Type-C Port**
- Via the **USB Full-speed Port**
- Via the **USB Serial/JTAG Port**

If the USB cable used for debugging cannot provide enough current, you can connect the board to a power adapter via any USB Type-C port.

Hardware Setup

Connect the ESP32-P4X-C5-Function-EV-Board to your computer using a USB cable. The board can be powered through any of the USB Type-C ports. The USB Serial/JTAG Port is recommended for flashing firmware and debugging.

To connect the LCD, follow these steps:

1. Secure the development board to the LCD adapter board by attaching the short brass standoffs to the four standoff posts at the center of the LCD adapter board.
2. Connect the J3 header of the LCD adapter board to the MIPI DSI connector on the ESP32-P4X-C5-Function-EV-Board using the LCD ribbon cable (**reverse direction**). Note that the LCD adapter board is already connected to the LCD.
3. Use a DuPont wire to connect the GPIO27 pin of the J1 header on the ESP32-P4X-C5-Function-EV-Board to the RST_LCD pin of the J6 header on the LCD adapter board. The GPIO mapped to RST_LCD can be configured via software, with GPIO27 set as the default.
4. Use a DuPont wire to connect the GPIO26 pin of the J1 header on the ESP32-P4X-C5-Function-EV-Board to the PWM pin of the J6 header on the LCD adapter board. The GPIO mapped to PWM can be configured via software, with GPIO26 set as the default.
5. It is recommended to power the LCD by connecting a USB cable to the J1 header of the LCD adapter board. If this is not feasible, use DuPont wires to connect the 5V and GND pins of the J1 header on the ESP32-P4X-C5-Function-EV-Board to the 5V and GND pins of the LCD adapter board, provided that the development board has sufficient power supply.

In summary, the ESP32-P4X-C5-Function-EV-Board and the LCD adapter board are connected via the following pins:

Table 1: DuPont Wire Connections

ESP32-P4X-C5-Function-EV-Board	LCD Adapter Board
MIPI DSI connector	J3 header
GPIO27 pin of J1 header	RST_LCD pin of J6 header
GPIO26 pin of J1 header	PWM pin of J6 header
5V pin of J1 header	5V pin of J6 header
GND pin of J1 header	GND pin of J6 header

6. Attach the long brass standoffs to the four standoff posts on the periphery of the LCD adapter board to allow the LCD to stand upright.

Note:

- If you power the LCD adapter board by connecting a USB cable to its J1 header, you do not need to connect its 5V and GND pins to the corresponding pins on the development board.
- To use the camera, connect the camera adapter board to the MIPI CSI connector on the development board using the camera ribbon cable (**forward direction**).

Software Setup

After completing the hardware setup, please follow ESP-IDF Get Started to set up your development environment and flash an application onto your board.

Contents and Packaging

Ordering Information The development board is available in the variant listed in the table below.

Part Number	On-board Module	Flash	PSRAM	Antenna
ESP32-P4X-C5-Function-EV-Board	ESP32-C5-MINI-1	16 MB	32 MB	PCB on-board antenna

For more information about available variants, visit the ESP Product Selector and select the **Development Board** tab. If you cannot find the variant you need in the table or Product Selector, or if you have special customization requirements, contact Espressif Sales.

Retail Orders If you order a few samples, each board comes in an individual package in either antistatic bag or any packaging depending on your retailer.

For retail orders, please go to https://www.espressif.com/en/company/contact/buy-a-sample.

Wholesale Orders If you order in bulk, the boards come in large cardboard boxes.

For wholesale orders, please go to https://www.espressif.com/en/contact-us/sales-questions.

2.1.3 Hardware Reference

Header Block

The table below provides the **Name** and **Function** of the pin header J1 of the board. The pin header names are shown in Figure *ESP32-P4X-C5-Function-EV-Board - front*. The numbering is the same as in the ESP32-P4X-C5-Function-EV-Board Schematics.

No.	Name	Type[Page 26, 2]	Function
1	3V3	P	3.3 V power supply
2	5V	P	5 V power supply
3	7	I/O/T	GPIO7
4	5V	P	5 V power supply
5	8	I/O/T	GPIO8
6	GND	GND	Ground
7	23	I/O/T	GPIO23

continues on next page

Table 2 – continued from previous page

No.	Name	Type[Page 26, 2]	Function
8	37	I/O/T	U0TXD, GPIO37
9	GND	GND	Ground
10	38	I/O/T	U0RXD, GPIO38
11	21	I/O/T	GPIO21
12	22	I/O/T	GPIO22
13	20	I/O/T	GPIO20
14	GND	GND	Ground
15	NC(6)	I/O/T	GPIO6[3]
16	5	I/O/T	GPIO5
17	3V3	P	3.3 V power supply
18	4	I/O/T	GPIO4
19	3	I/O/T	GPIO3
20	GND	GND	Ground
21	2	I/O/T	GPIO2
22	NC(1)	I/O/T	GPIO1[4]
23	NC(0)	I/O/T	GPIO0[4]
24	36	I/O/T	GPIO36
25	GND	GND	Ground
26	32	I/O/T	GPIO32
27	NC	–	No connection
28	NC	–	No connection
29	33	I/O/T	GPIO33
30	GND	GND	Ground
31	26	I/O/T	GPIO26
32	NC(54)	I/O/T	GPIO54[5]
33	48	I/O/T	GPIO48
34	GND	GND	Ground
35	NC(53)	I/O/T	GPIO53[6]
36	46	I/O/T	GPIO46
37	47	I/O/T	GPIO47
38	27	I/O/T	GPIO27
39	GND	GND	Ground
40	NC(45)	I/O/T	GPIO45[7]

J1

2.1.4 Hardware Revision Details

No previous revisions.

2.1.5 Related Documents

Please download the following documents from the HTML version of esp-dev-kits Documentation.

- ESP32-P4X-C5-Function-EV-Board Schematics (PDF)
- ESP32-P4X-C5-Function-EV-Board PCB Layout (PDF)
- ESP32-P4X-C5-Function-EV-Board Dimensions (PDF)
- ESP32-P4X-C5-Function-EV-Board Dimensions Source File (DXF) - Can be viewed using Autodesk Viewer

[2] P: Power supply; I: Input; O: Output; T: High impedance.
[3] To enable GPIO6 on the connector, move R30 to R29 to disable the P4_WAKEUP_C5 function.
[4] To enable GPIO0 and GPIO1 on the connector, move R61 and R59 to R199 and R197, respectively, to disable the XTAL_32K function.
[5] To enable GPIO54 on the connector, move R76 to R80 to disable the ESP32-P4 control of the ESP32-C5 enable function.
[6] To enable GPIO53 on the connector, move R79 to R85 to disable the ESP32-P4 control of the PA enable function.
[7] To enable GPIO45 on the connector, move R231 to R100 to disable the ESP32-P4 control of the SD card enable function.

- ESP32-P4 Series SoC Errata
- 1.0K-GT-15PB Specification (PDF)
- Camera Datasheet (PDF)
- Display Datasheet (PDF)
- Datasheet of display driver chip EK73217BCGA (PDF)
- Datasheet of display driver chip EK79007AD (PDF)
- LCD Adapter Board Schematic (PDF)
- LCD Adapter Board PCB Layout (PDF)
- Camera Adapter Board Schematic (PDF)
- Camera Adapter Board PCB Layout (PDF)
- LCD Adapter Board Reference Design (ZIP)
- Camera Adapter Board Reference Design (ZIP)

For further design documentation for the board, please contact us at sales@espressif.com.

2.1.6 Disclaimer and Copyright Notice

See *Disclaimer and Copyright Notice*.

Chapter 3

ESP32-P4X-EYE

ESP32-P4X-EYE is a vision development board based on the ESP32-P4 chip, mainly targeting camera applications.

You can find examples for ESP32-P4X-EYE by accessing Examples .

3.1 ESP32-P4X-EYE

This user guide will help you get started with ESP32-P4X-EYE and will also provide more in-depth information.

ESP32-P4X-EYE is a vision development board based on the ESP32-P4 chip, mainly targeting camera applications. ESP32-P4 features a dual-core RISC-V processor and supports up to 32 MB of PSRAM. In addition, ESP32-P4 supports USB 2.0 standard, MIPI-CSI/DSI, H264 Encoder, and various other peripherals. With all of its outstanding features, the board is an ideal choice for developing low-cost, high-performance, low-power network-connected audio and video products.

The board integrates the ESP32-C6-MINI-1U module for Wi-Fi and Bluetooth communication. It supports MIPI-CSI camera interface and USB 2.0 High-Speed device mode. Rich onboard features include a camera, display, microphone, and MicroSD card, enabling real-time monitoring of the environment and collection of image and audio data. It is suitable for applications such as smart surveillance cameras, vision model detection, and edge computing in IoT that require real-time image processing and wireless communication.

Most of the I/O pins are broken out to the pin header for easy interfacing. Developers can connect peripherals with jumper wires.

This guide includes the following sections:

- *Getting Started*: Overview of ESP32-P4X-EYE and hardware/software setup instructions to get started.
- *Hardware Reference*: More detailed information about the ESP32-P4X-EYE' s hardware.
- *Hardware Revision Details*: Revision history, known issues, and links to user guides for previous versions (if any) of ESP32-P4X-EYE.
- *Related Documents*: Links to related documentation.
- *Disclaimer and Copyright Notice*: Link to the disclaimer and copyright notice.

3.1.1 Getting Started

This section provides a brief introduction to ESP32-P4X-EYE, instructions on how to do the initial hardware setup and how to flash firmware onto it.



Fig. 1: ESP32-P4X-EYE Front View (click to enlarge)



Fig. 2: ESP32-P4X-EYE Back View (click to enlarge)

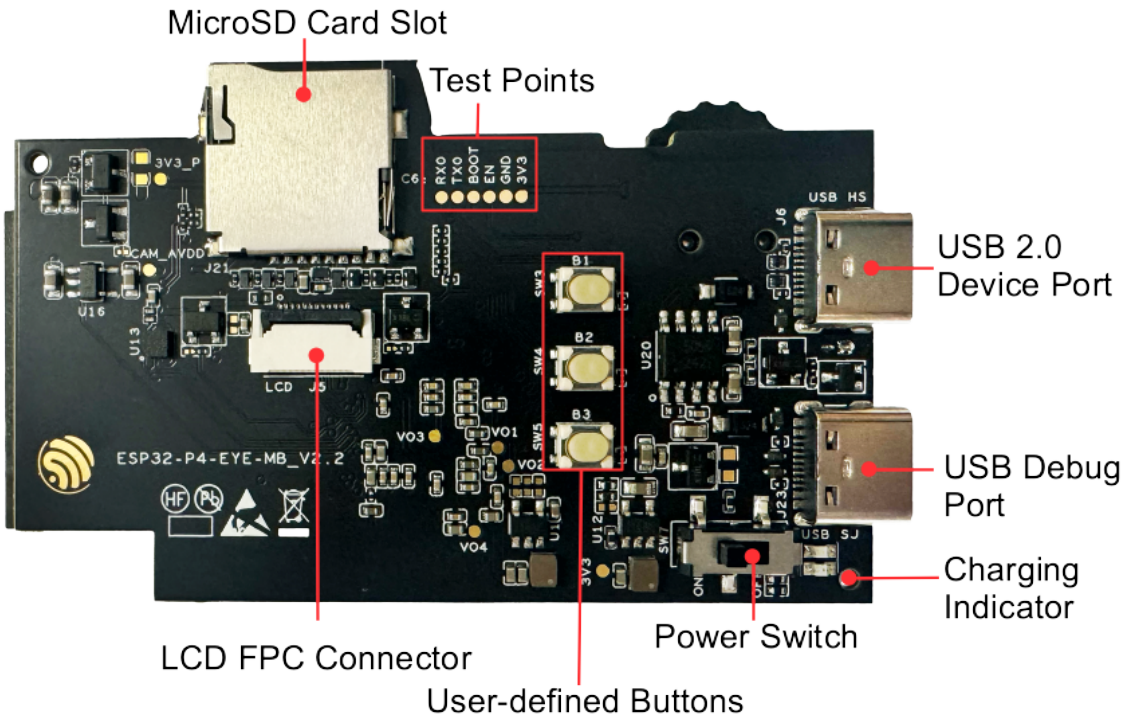

Fig. 3: ESP32-P4X-EYE PCB Top View (click to enlarge)

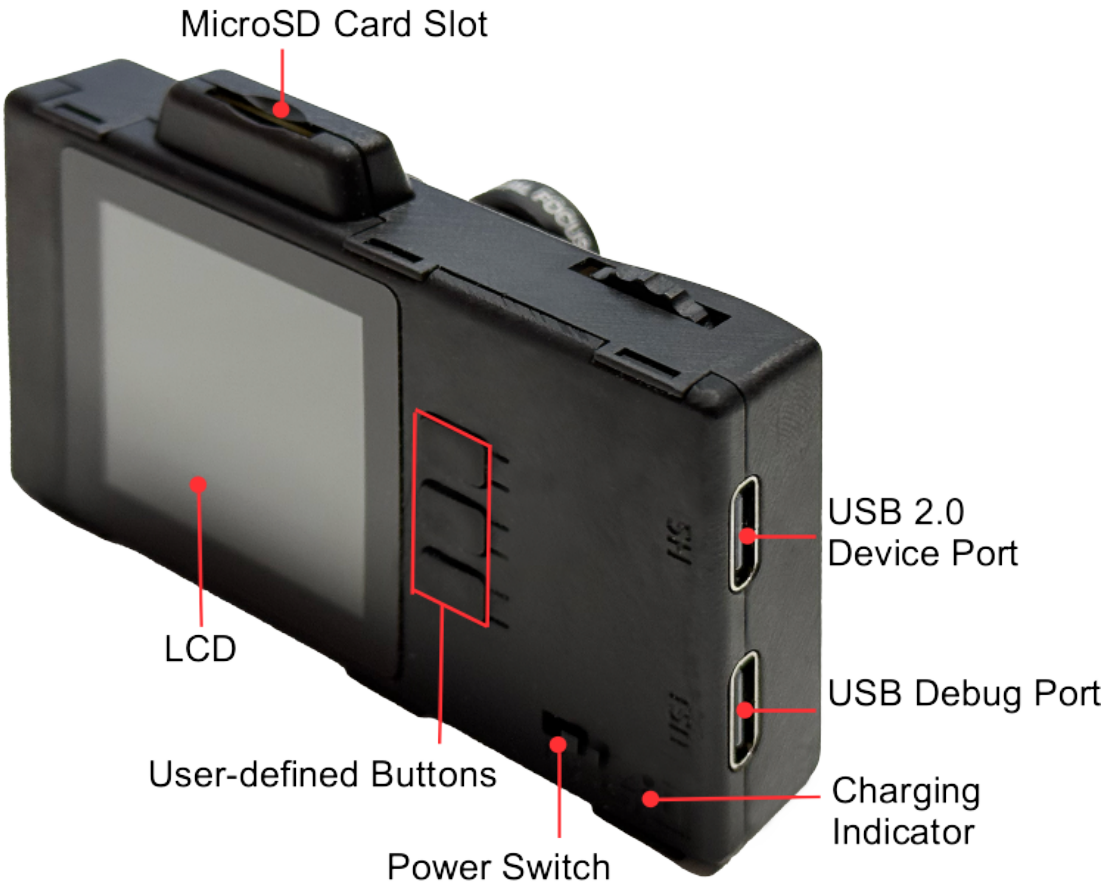

Fig. 4: ESP32-P4X-EYE Front View (click to enlarge)

Description of Components

The key components of the top PCB are described in a clockwise direction. To facilitate use, these components or interfaces are also marked on the ESP32-P4X-EYE enclosure.

Key Component	Description
MicroSD Card Slot	Supports a MicroSD card through 4-line SD bus with SDIO protocol or SPI protocol.
Test Points	Provides access points for programming and testing the ESP32-C6-MINI-1U; can be connected via Dupont wires.
USB 2.0 Device Port	Connected to the USB 2.0 OTG High-Speed interface of ESP32-P4, compliant with the USB 2.0 specification. When communicating with other devices via this port, ESP32-P4 acts as a USB device connecting to a USB host. USB 2.0 Device Port can also be used for powering the board. Marked with `USB 2.0` on the enclosure.
USB Debug Port	Used for board power, firmware flashing, and connecting to USB-Serial-JTAG interface of ESP32-P4. Marked with `Debug` on the enclosure.
Power Switch	Flip to "I" to power on the board with 5 V input; flip to "O" to power off.
User-defined Buttons	Customizable by user application.
LCD FPC Connector	Connects to a 1.54-inch LCD screen.
LCD	1.54-inch LCD with 240 × 240 resolution and SPI interface, capable of displaying real-time images from the camera. For details, refer to Display Datasheet.
Charging Indicator	When the battery is charging, the indicator light is red; once charging is complete, the light turns green.

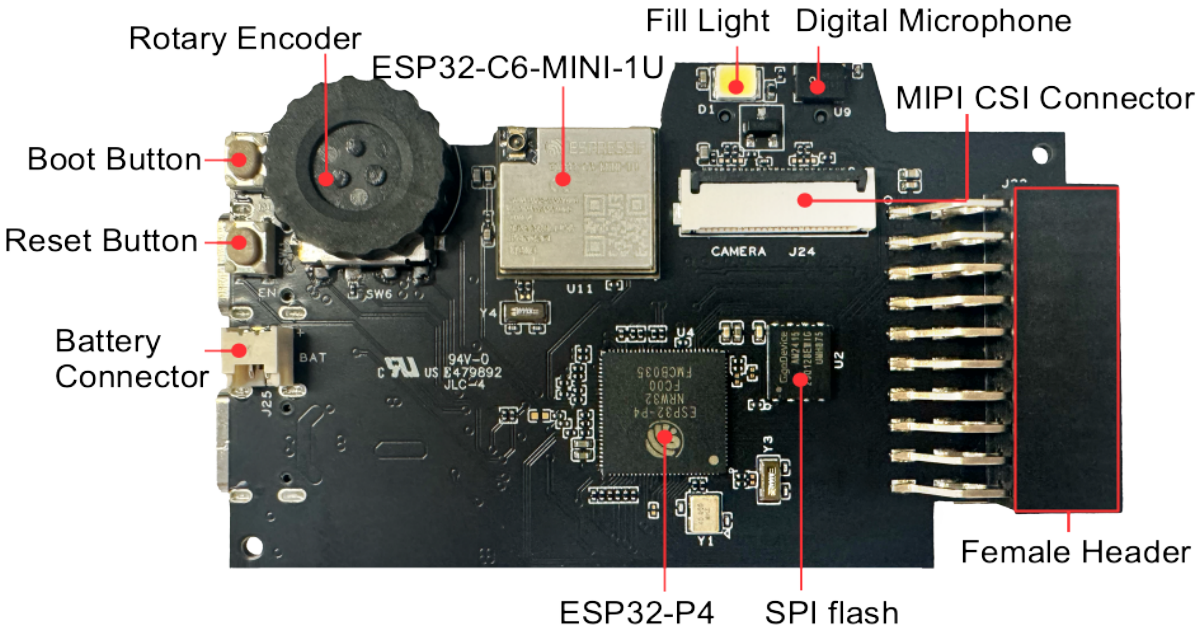

Fig. 5: ESP32-P4X-EYE PCB Bottom View (click to enlarge)

The key components of the back PCB are described in a clockwise direction. To facilitate use, these components or interfaces are also marked on the ESP32-P4X-EYE enclosure.

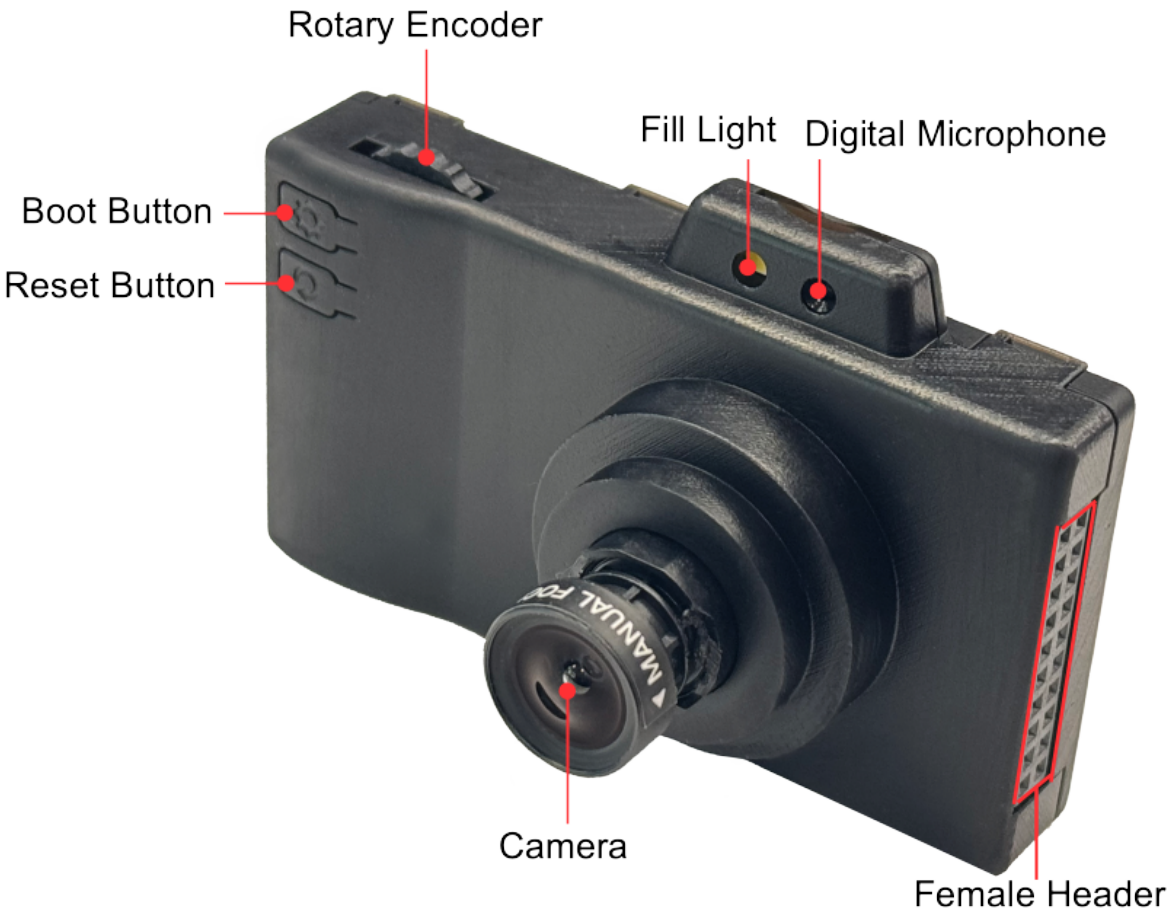

Fig. 6: ESP32-P4X-EYE Back View (click to enlarge)

Key Component	Description
Rotary Encoder	You can customize functions based on your application, such as using it to control LCD interface or adjust camera zoom levels.
ESP32-C6-MINI-1U	Serves as the Wi-Fi and Bluetooth communication module.
Fill Light	Provides illumination for image capture and video recording.
Digital Microphone	Used for voice recognition or audio recording.
MIPI CSI Connector	Connects to the camera module.
Female Header	2 x 10P header, customizable based on application.
SPI flash	16 MB flash connected via the SPI interface.
ESP32-P4	High-performance MCU with large internal memory; supports advanced image and voice processing.
Battery Connector	Connects to a lithium battery.
Reset Button	Resets the board. Marked with ↻ on the enclosure.
Boot Button	Controls boot mode. Marked with ⍰ on the enclosure. Press the **Reset Button** while holding down the **Boot Button** to reset ESP32-P4 and enter firmware download mode. Firmware can then be downloaded to SPI flash via the USB Debug Port. In general applications, it can act as a confirmation button.
Camera	2 MP resolution with manually adjustable focal length. For details, refer to Camera Datasheet.

Application Examples

The following application examples are available for ESP32-P4X-EYE:

- Factory Demo - Demonstrates a comprehensive mini camera application for ESP32-P4X-EYE that supports photo capture, timed capture, video recording, album preview, USB SD card mounting, image parameter configuration, and AI features including face detection, pedestrian detection, and YOLOv11-nano-based object detection.

For more examples and the latest updates, please refer to the examples folder.

To explore the application examples or to develop your own, please follow the steps outlined in the *Application Development* section.

Application Development

Before powering up your ESP32-P4X-EYE, please make sure that it is in good condition with no obvious signs of damage.

Required Hardware

- ESP32-P4X-EYE
- USB cables
- Computer running Windows, Linux, or macOS

Note: Be sure to use a good quality USB cable. Some cables are for charging only and do not provide the needed data lines nor work for programming the boards.

Optional Hardware

- MicroSD card
- Lithium battery

Hardware Setup Connect ESP32-P4X-EYE to your computer using a USB cable. The board can be powered through the `USB 2.0 Device Port` or `USB Debug Port`. The `USB Debug Port` is recommended for flashing firmware and debugging.

Software Setup To set up your development environment and flash an application example onto your board, please follow the installation instructions in ESP-IDF Get Started.

Contents and Packaging

Ordering Information The development board is available in the variant listed in the table below.

Part Number	On-board Module	Flash	PSRAM	Antenna
ESP32-P4X-EYE	ESP32-C6-MINI-1U	16 MB	32 MB	External antenna connector

For more information about available variants, visit the ESP Product Selector and select the **Development Board** tab. If you cannot find the variant you need in the table or Product Selector, or if you have special customization requirements, contact Espressif Sales.

Retail Orders If you order a few samples, each board comes in an individual package in either antistatic bag or any packaging depending on your retailer.

For retail orders, please go to https://www.espressif.com/en/company/contact/buy-a-sample.

Wholesale Orders If you order in bulk, the boards come in large cardboard boxes.

For wholesale orders, please go to https://www.espressif.com/en/contact-us/sales-questions.

3.1.2 Hardware Reference

Functional Block Diagram

The block diagram below shows the components of ESP32-P4X-EYE and their interconnections.

Power Supply Options

ESP32-P4X-EYE can be powered using the following methods:

1. Via the `USB 2.0 Device Port` or `USB Debug Port`

   Connect ESP32-P4X-EYE to a power source using a USB Type-C cable through either of the two ports. If a lithium battery is already installed, it will be charged simultaneously.

2. Via the `Battery Connector`

   To use this method, first open the enclosure, then connect the battery to the Battery Connector. The lithium battery must not exceed 4 mm × 25 mm × 45 mm in size. It should use a 1.25 mm pitch connector, and the polarity must match the markings on the PCB.

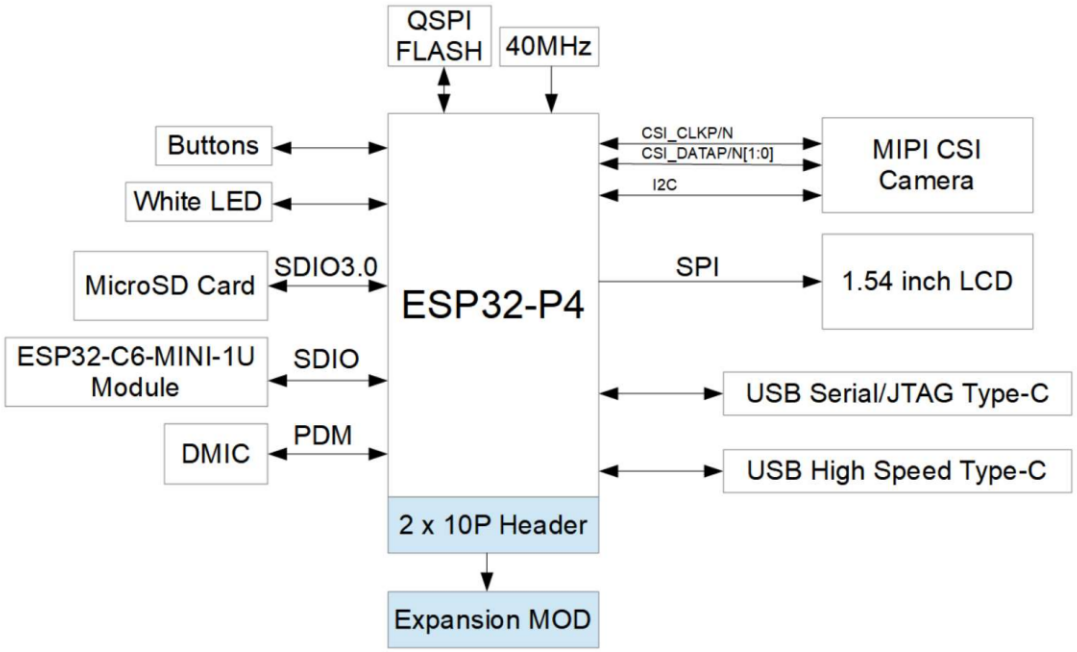

Fig. 7: ESP32-P4X-EYE Functional Block Diagram (click to enlarge)

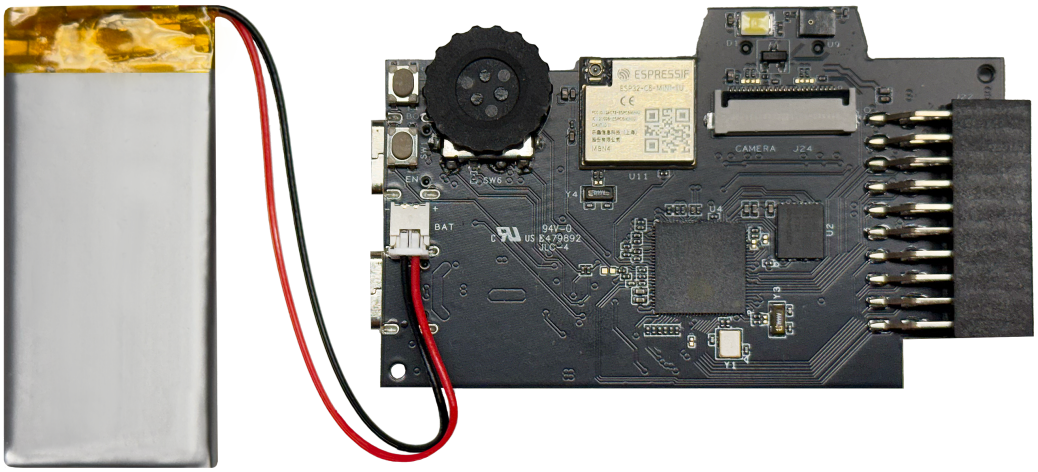

Fig. 8: Battery Connection (click to enlarge)



Fig. 9: Female Header (click to enlarge)

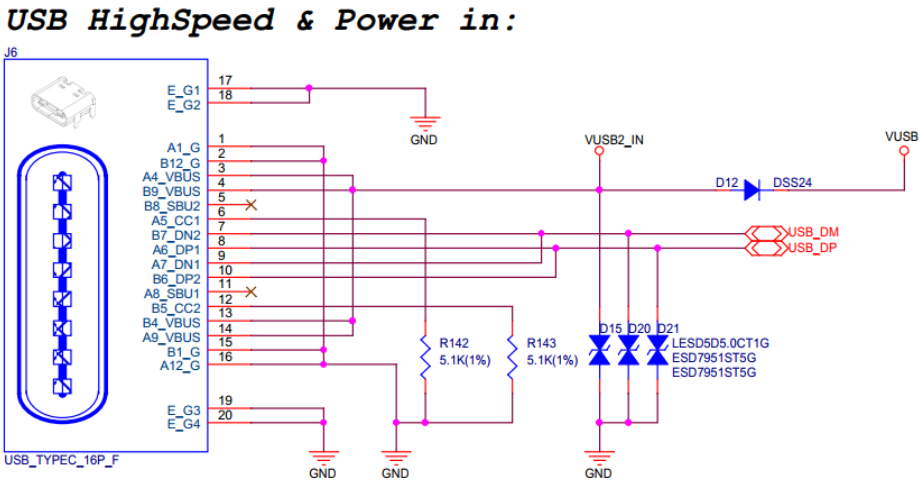

Fig. 10: USB 2.0 Device Port Circuit (click to enlarge)

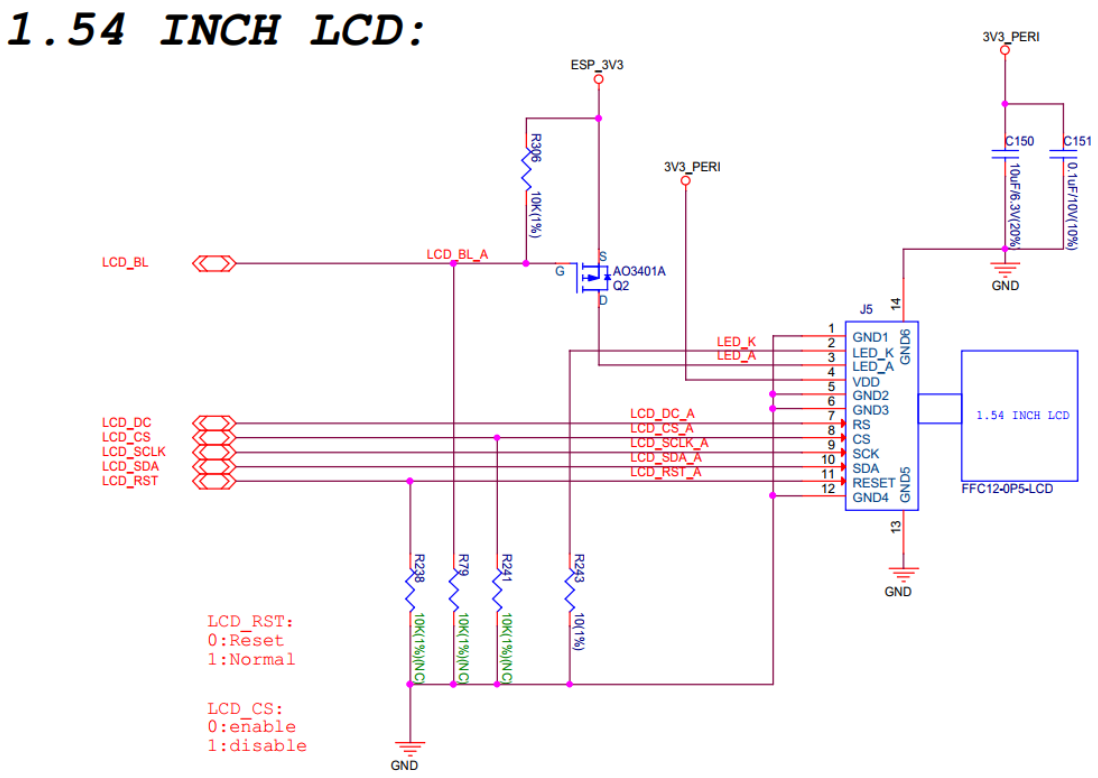

Fig. 11: LCD Circuit (click to enlarge)

Female Header

USB 2.0 Device Port Circuit

LCD Circuit

Please note that this interface supports SPI displays. ESP32-P4X-EYE features the ST7789, which uses the `LCD_BL` pin (GPIO20) to control the backlight.

MicroSD Card Slot Interface Circuit

Please note that the MicroSD card interface supports:

- 1-bit and 4-bit SD bus configurations
- Communication via SDIO protocol or SPI protocol

Charging Circuit

Microphone Circuit

Camera Circuit

Rotary Encoder Circuit

ESP32-C6-MINI-1U Module Circuit

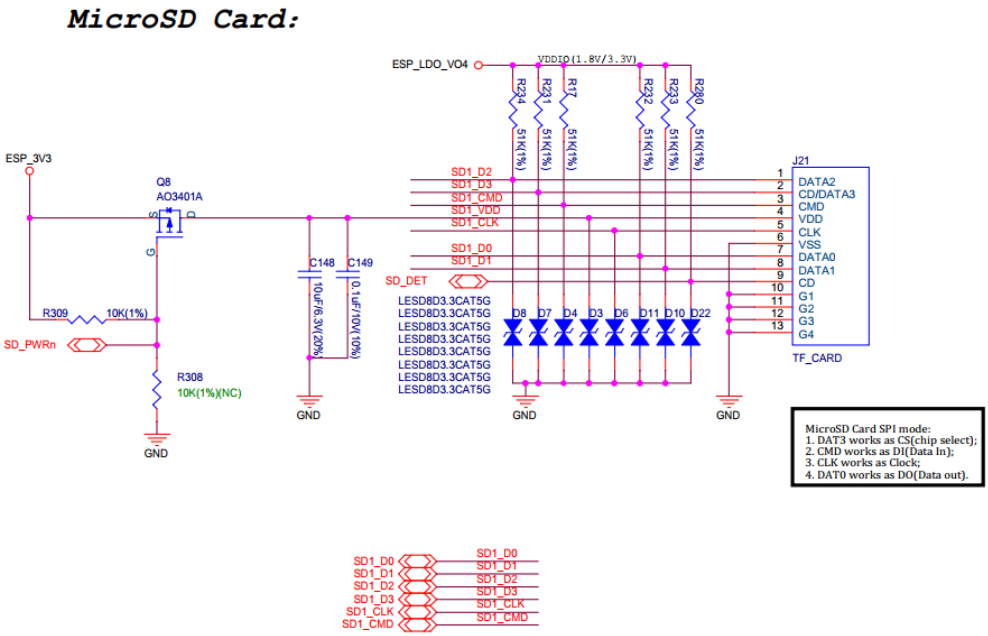

Fig. 12: MicroSD Card Slot Interface Circuit (click to enlarge)

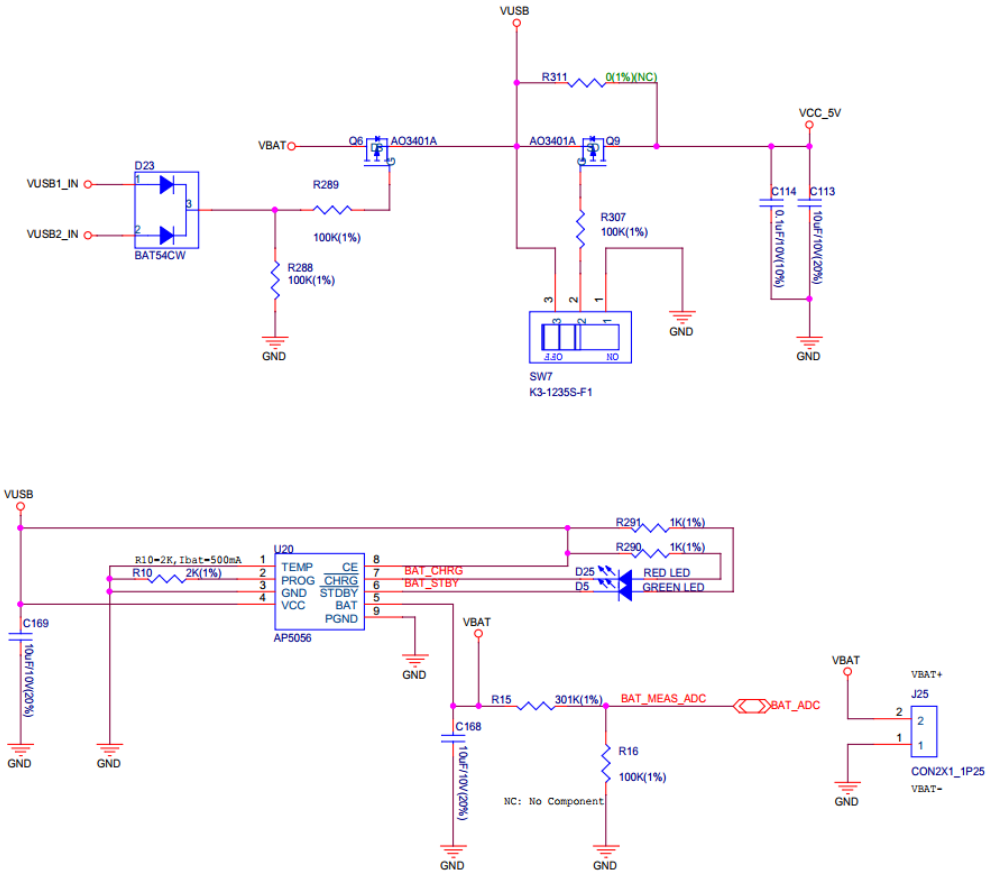

Fig. 13: Charging Circuit (click to enlarge)

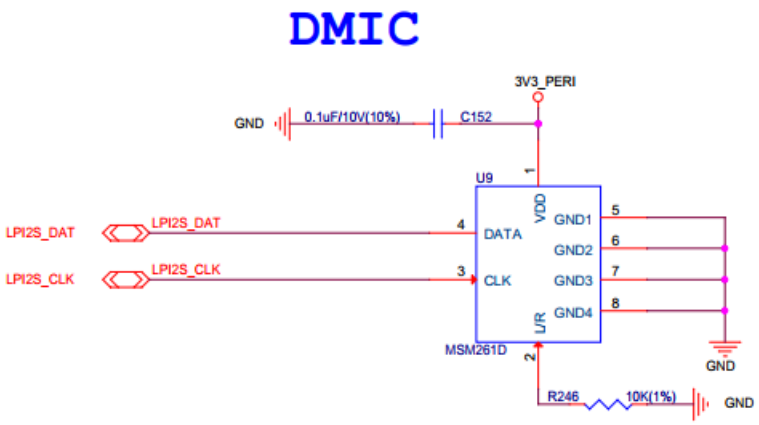

Fig. 14: Microphone Circuit (click to enlarge)

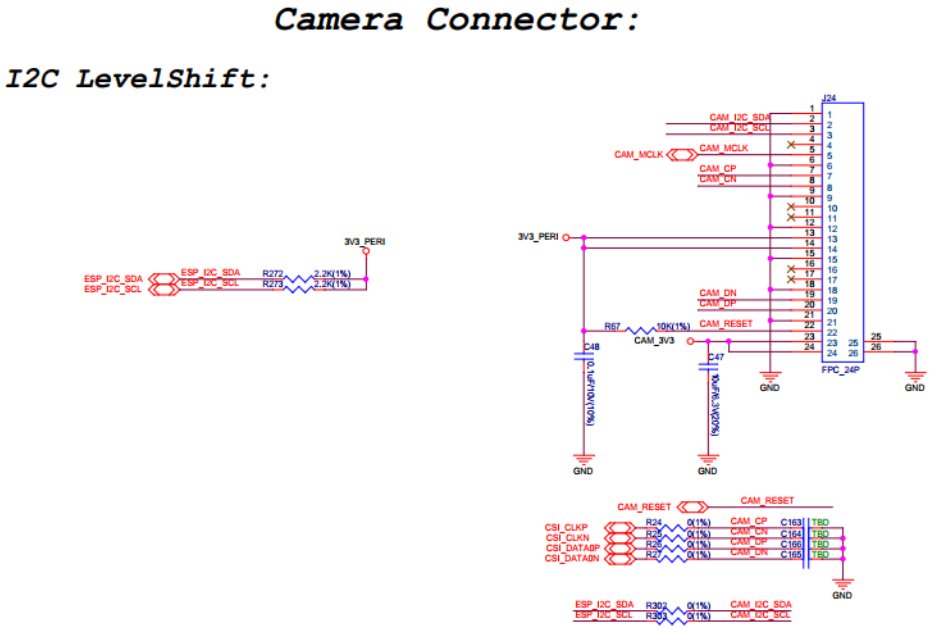

Fig. 15: Camera Circuit (click to enlarge)

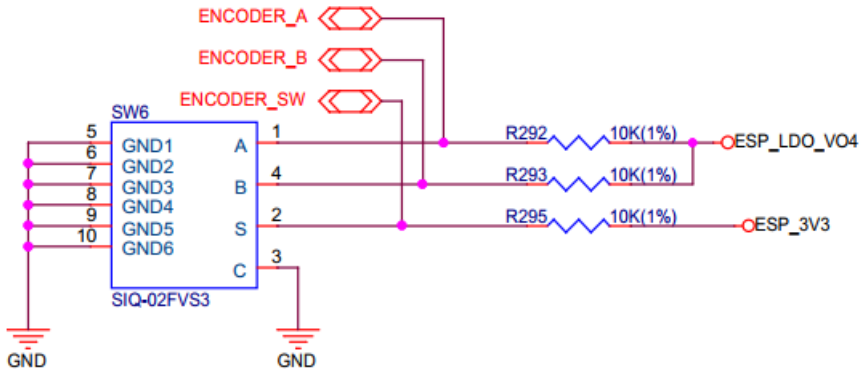

Fig. 16: Rotary Encoder Circuit (click to enlarge)

WiFi & BT Module:

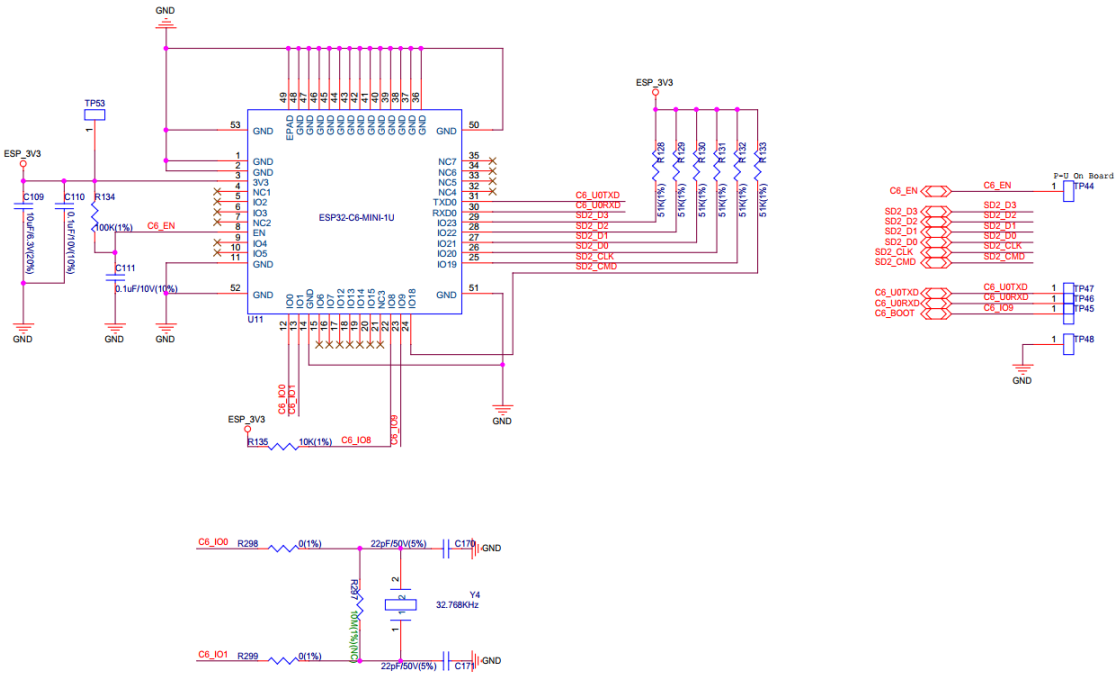

Fig. 17: ESP32-C6-MINI-1U Module Circuit (click to enlarge)

3.1.3 Hardware Revision Details

The difference between the ESP32-P4X-EYE and the *ESP32-P4-EYE* is that the main chip on the former has been upgraded to the ESP32-P4 chip revision v3.1 or later version.

3.1.4 Related Documents

Please download the following documents from the HTML version of esp-dev-kits Documentation.

- ESP32-P4X-EYE Reference Design (ZIP)
- Camera Datasheet (PDF)
- Display Datasheet (PDF)
- ST7789VW Datasheet (PDF)
- OV2710 Overview (PDF)

3.1.5 Disclaimer and Copyright Notice

See *Disclaimer and Copyright Notice*.

Chapter 4

EOL (End of Life) Boards

This section contains user guides for the ESP32-P4 end-of-life development boards and is provided for reference only. While these boards may still be available on the market or used in legacy systems, they no longer receive updates, bug fixes, or official support. It is recommended to switch to newer development boards for better performance and more features.

4.1 ESP32-P4-Function-EV-Board

ESP32-P4-Function-EV-Board is a multimedia development board based on the ESP32-P4 chip. ESP32-P4 chip features a dual-core RISC-V processor and supports up to 32 MB PSRAM. In addition, ESP32-P4 supports USB 2.0 specification, MIPI-CSI/DSI, H264 Encoder, and various other peripherals. With all of its outstanding features, the board is an ideal choice for developing low-cost, high-performance, low-power network-connected audio and video products.

4.1.1 ESP32-P4-Function-EV-Board v1.5.2

The older version: *ESP32-P4-Function-EV-Board v1.4*

Note: If you are using ESP32-P4X-Function-EV-Board with chip revision v3.x, please refer to this *user guide*.

The version number v1.5.2 refers to the board hardware version. To identify the embedded chip revision, refer to ESP32-P4 Series SoC Errata > Chip Revision Identification.

This user guide will help you get started with ESP32-P4-Function-EV-Board and will also provide more in-depth information.

ESP32-P4-Function-EV-Board is a multimedia development board based on the ESP32-P4 chip. ESP32-P4 chip features a dual-core RISC-V processor and supports up to 32 MB PSRAM. In addition, ESP32-P4 supports USB 2.0 specification, MIPI-CSI/DSI, H264 Encoder, and various other peripherals. With all of its outstanding features, the board is an ideal choice for developing low-cost, high-performance, low-power network-connected audio and video products.

The 2.4 GHz Wi-Fi 6 & Bluetooth 5 (LE) module ESP32-C6-MINI-1 serves as the Wi-Fi and Bluetooth module of the board. The board also includes a 7-inch capacitive touch screen with a resolution of 1024 x 600 and a 2MP camera with MIPI CSI, enriching the user interaction experience. The development board is suitable for prototyping

a wide range of products, including visual doorbells, network cameras, smart home central control screens, LCD electronic price tags, two-wheel vehicle dashboards, etc.

Most of the I/O pins are broken out to the pin headers for easy interfacing. Developers can connect peripherals with jumper wires.

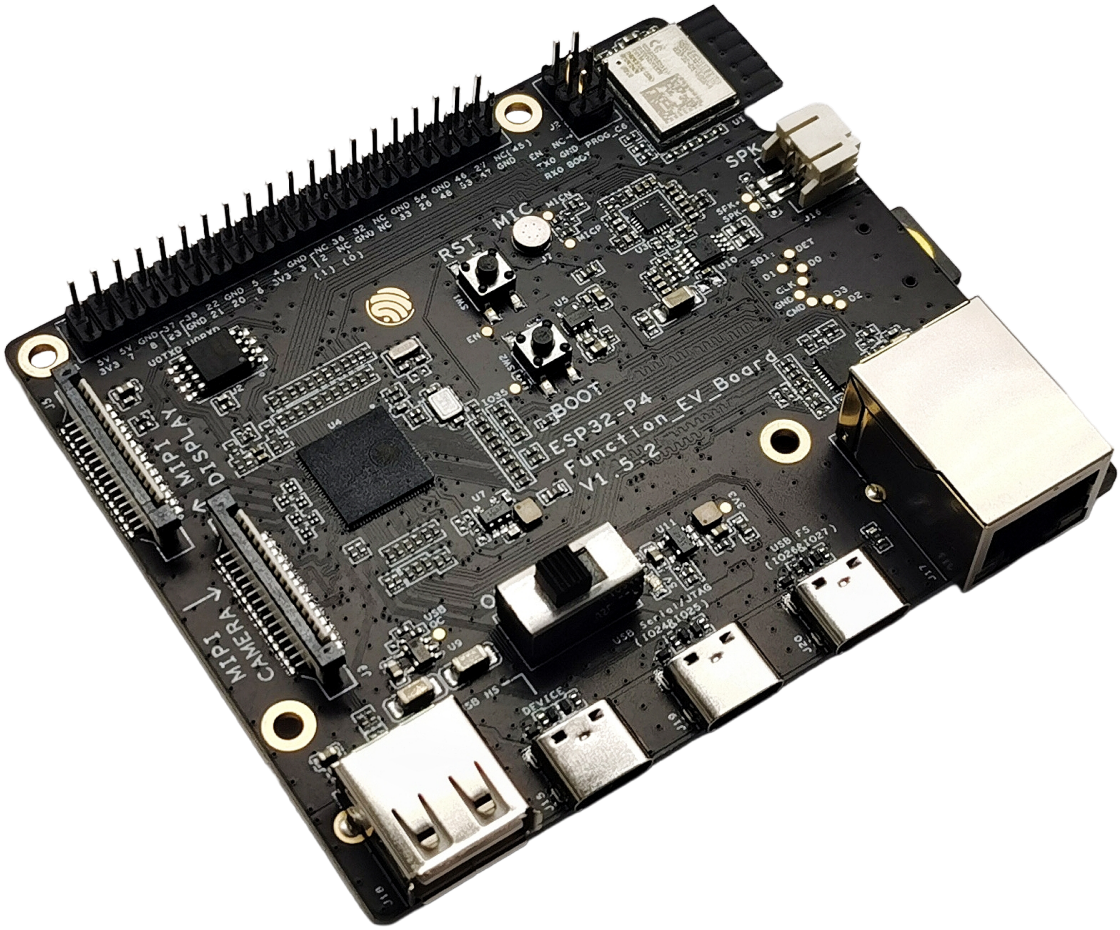

Fig. 1: ESP32-P4-Function-EV-Board

The document consists of the following major sections:

- *Getting Started*: Overview of ESP32-P4-Function-EV-Board and hardware/software setup instructions to get started.
- *Hardware Reference*: More detailed information about the ESP32-P4-Function-EV-Board' s hardware.
- *Hardware Revision Details*: Revision history, known issues, and links to user guides for previous versions (if any) of ESP32-P4-Function-EV-Board.
- *Related Documents*: Links to related documentation.
- *Disclaimer and Copyright Notice*: Link to the disclaimer and copyright notice.

Getting Started

This section provides a brief introduction to ESP32-P4-Function-EV-Board, instructions on how to do the initial hardware setup and how to flash firmware onto it.

Description of Components The key components of the board are described from front view to back view, starting from the J1, in a clockwise direction.

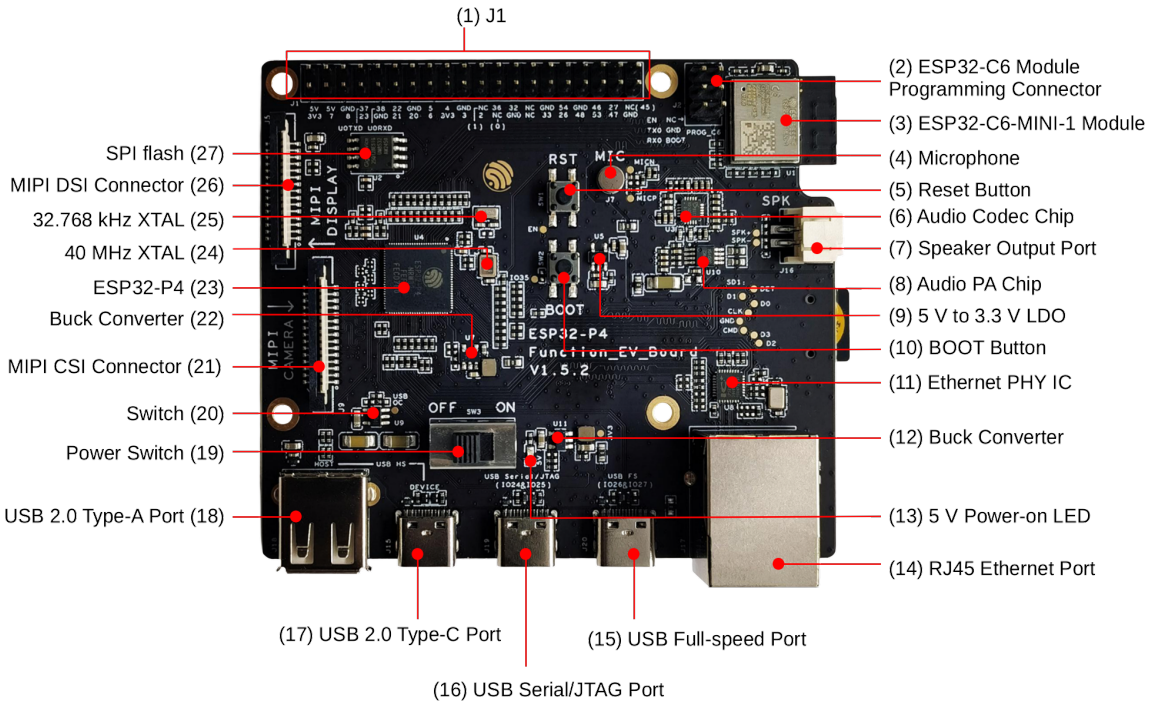

Fig. 2: ESP32-P4-Function-EV-Board - front (click to enlarge)

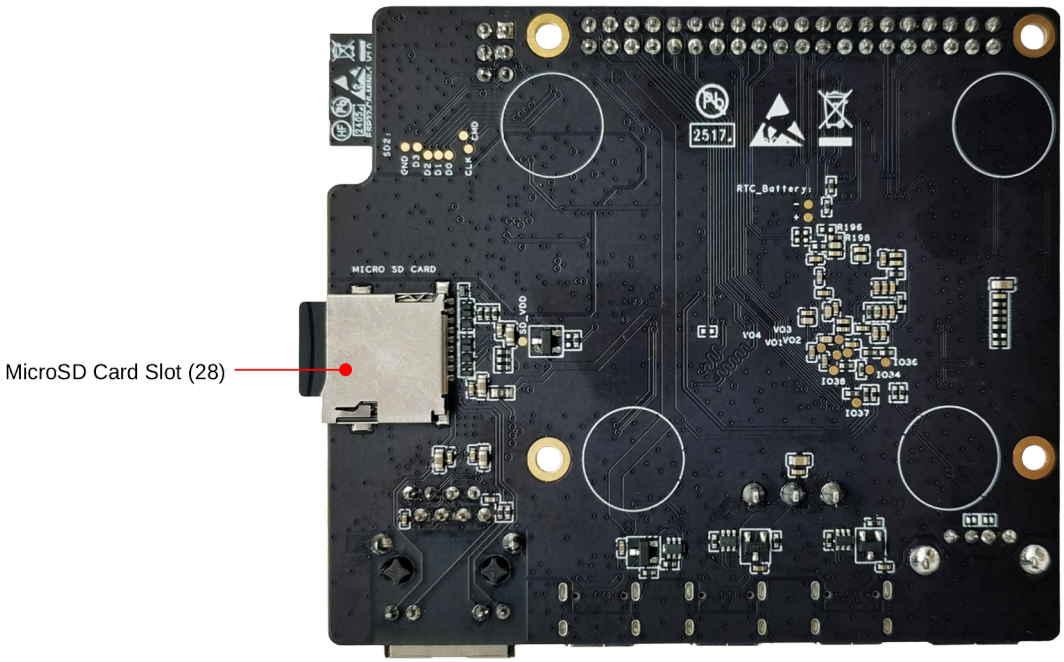

Fig. 3: ESP32-P4-Function-EV-Board - back (click to enlarge)

No.	Key Component	Description
1	J1	All available GPIO pins are broken out to the header block J1 for easy interfacing. For more details, see *Header Block*.
2	ESP32-C6 Module Programming Connector	The connector can be used with ESP-Prog or other UART tools to flash firmware onto the ESP32-C6 module.
3	ESP32-C6-MINI-1 Module	This module serves as the Wi-Fi and Bluetooth communication module for the board.
4	Microphone	Onboard microphone connected to the interface of Audio Codec Chip.
5	Reset Button	Resets the board.
6	Audio Codec Chip	ES8311 is a low-power mono audio codec chip. It includes a single-channel ADC, a single-channel DAC, a low-noise pre-amplifier, a headphone driver, digital sound effects, analog mixing, and gain functions. It interfaces with the ESP32-P4 chip over I2S and I2C buses to provide hardware audio processing independent of the audio application.
7	Speaker Output Port	This port is used to connect a speaker. The maximum output power can drive a 4 Ω, 3 W speaker. The pin spacing is 2.00 mm (0.08”).
8	Audio PA Chip	NS4150B is an EMI-compliant, 3 W mono Class D audio power amplifier that amplifies audio signals from the audio codec chip to drive speakers.
9	5 V to 3.3 V LDO	A power regulator that converts a 5 V supply to a 3.3 V output.
10	BOOT Button	The boot mode control button. Press the **Reset Button** while holding down the **Boot Button** to reset ESP32-P4 and enter firmware download mode. Firmware can then be downloaded to SPI flash via the USB Serial/JTAG Port.
11	Ethernet PHY IC	Ethernet PHY chip connected to the ESP32-P4 EMAC RMII interface and RJ45 Ethernet Port.
12	Buck Converter	A buck DC-DC converter for the 3.3 V power supply.
13	5 V Power-on LED	This LED lights up when the board is powered through any USB Type-C port.
14	RJ45 Ethernet Port	An Ethernet Port supporting 10/100 Mbps adaptive.

No.	Key Component	Description
15	USB Full-speed Port	USB Type-C port that supports USB 2.0 Full-speed data rate. It can be used as the power supply interface for the development board and as a communication interface.
16	USB Serial/JTAG Port	USB Type-C port that supports USB 2.0 Full-speed data rate. It can be used to flash firmware to the ESP32-P4 chip, communicate with the chip via the USB protocol, and perform JTAG debugging.
17	USB 2.0 Type-C Port	The USB 2.0 Type-C Port is connected to the USB 2.0 OTG High-Speed interface of ESP32-P4, compliant with the USB 2.0 specification. When communicating with other devices via this port, ESP32-P4 acts as a USB device connecting to a USB host. Please note that USB 2.0 Type-C Port and USB 2.0 Type-A Port cannot be used simultaneously. USB 2.0 Type-C Port can also be used for powering the board.
18	USB 2.0 Type-A Port	The USB 2.0 Type-A Port is connected to the USB 2.0 OTG High-Speed interface of ESP32-P4, compliant with the USB 2.0 specification. When communicating with other devices via this port, ESP32-P4 acts as a USB host, providing up to 500 mA of current. Please note that USB 2.0 Type-C Port and USB 2.0 Type-A Port cannot be used simultaneously.
19	Power Switch	Power On/Off Switch. Toggling toward the ON sign powers the board on (5 V), toggling away from the ON sign powers the board off.
20	Switch	TPS2051C is a USB power switch that provides a 500 mA output current limit.
21	MIPI CSI Connector	The FPC connector 1.0K-GT-15PB is used for connecting external camera modules to enable image transmission. For details, please refer to 1.0K-GT-15PB specification in Related Documents. FPC specifications: 1.0 mm pitch, 0.7 mm pin width, 0.3 mm thickness, 15 pins.
22	Buck Converter	A buck DC-DC converter for VDD_HP power supply of ESP32-P4.
23	ESP32-P4	A high-performance MCU with large internal memory and powerful image and voice processing capabilities.
24	40 MHz XTAL	An external precision 40 MHz crystal oscillator that serves as a clock for the system.
25	32.768 kHz XTAL	An external precision 32.768 kHz crystal oscillator that serves as a low-power clock while the chip is in deep-sleep mode.
26	MIPI DSI Connector	The FPC connector 1.0K-GT-15PB is used for connecting displays. For details, please refer to 1.0K-GT-15PB Specification in Related Documents. FPC specifications: 1.0 mm pitch, 0.7 mm pin width, 0.3 mm thickness, 15 pins.
27	SPI flash	The 16 MB flash is connected to the chip via the SPI interface.
28	MicroSD Card Slot	The development board supports a MicroSD card in 4-bit mode and can store or play audio files from the MicroSD card.

Accessories Optionally, the following accessories are included in the package:

- LCD and its accessories (optional)
  - 7-inch capacitive touch screen with a resolution of 1024 x 600
  - LCD adapter board
  - Accessories bag, including DuPont wires, ribbon cable for LCD, long standoffs (20 mm in length), and short standoffs (8 mm in length)
- Camera and its accessories (optional)
  - 2MP camera with MIPI CSI
  - Camera adapter board
  - Ribbon cable for camera

Note: Please note that the ribbon cable in the **forward direction**, whose strips at the two ends are on the same side, should be used for the **camera**; the ribbon cable in the **reverse direction**, whose strips at the two ends are on different sides, should be used for the **LCD**.

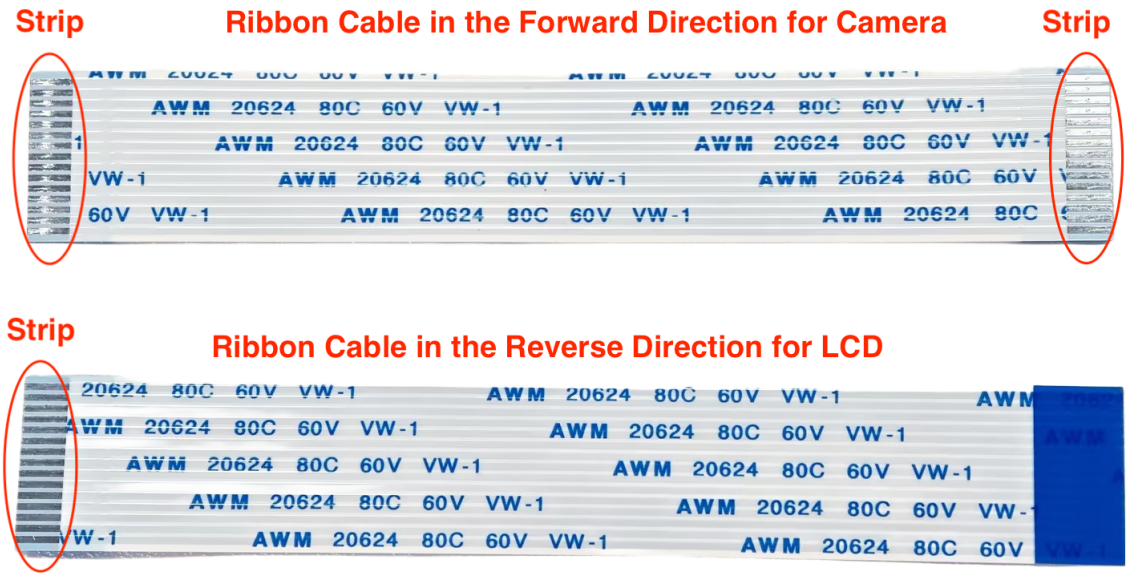

Fig. 4: Ribbon Cables in Forward and Reverse Directions

Application Examples The following application examples are available for ESP32-P4-Function-EV-Board v1.5.2:

- ESP_Brookesia Phone - Demonstrates an Android-like interface with multiple applications using ESP_Brookesia, utilizing MIPI-DSI, MIPI-CSI, ESP32-C6, SD card, and audio interfaces on a development board, providing a basis for efficient multimedia application development.
- LVGL Demo v8 - Demonstrates how to port LVGL v8 and conduct performance testing using LVGL' s built-in demos on an ESP32-P4-Function-EV-Board with a 7-inch LCD screen, serving as a foundation for developing applications based on LVGL v8.
- LVGL Demo v9 - Demonstrates how to port LVGL v9 and conduct performance testing using LVGL' s built-in demos on an ESP32-P4-Function-EV-Board, serving as a basis for developing applications based on LVGL v9.

For more examples and the latest updates, please refer to the examples folder.

To explore the application examples or to develop your own, please follow the steps outlined in the *Start Application Development* section.

Start Application Development Before powering up your ESP32-P4-Function-EV-Board, please make sure that it is in good condition with no obvious signs of damage.

Required Hardware

- ESP32-P4-Function-EV-Board
- USB cables
- Computer running Windows, Linux, or macOS

Note: Be sure to use a good quality USB cable. Some cables are for charging only and do not provide the needed data lines nor work for programming the boards.

Optional Hardware

- MicroSD card

Hardware Setup Connect the ESP32-P4-Function-EV-Board to your computer using a USB cable. The board can be powered through any of the USB Type-C ports. The USB Serial/JTAG Port is recommended for flashing firmware and debugging.

To connect the LCD, follow these steps:

1. Secure the development board to the LCD adapter board by attaching the short brass standoffs (8 mm in length) to the four standoff posts at the center of the LCD adapter board.
2. Connect the J3 header of the LCD adapter board to the MIPI DSI connector on the ESP32-P4-Function-EV-Board using the LCD ribbon cable (**reverse direction**). Note that the LCD adapter board is already connected to the LCD.
3. Use a DuPont wire to connect the RST_LCD pin of the J6 header of the LCD adapter board to the GPIO27 pin of the J1 header on the ESP32-P4-Function-EV-Board. The RST_LCD pin can be configured via software, with GPIO27 set as the default.
4. Use a DuPont wire to connect the PWM pin of the J6 header of the LCD adapter board to the GPIO26 pin of the J1 header on the ESP32-P4-Function-EV-Board. The PWM pin can be configured via software, with GPIO26 set as the default.
5. It is recommended to power the LCD by connecting a USB cable to the J1 header of the LCD adapter board. If this is not feasible, connect the 5V and GND pins of the LCD adapter board to corresponding pins on the J1 header of the ESP32-P4-Function-EV-Board, provided that the development board has sufficient power supply.
6. Attach the long brass standoffs (20 mm in length) to the four standoff posts on the periphery of the LCD adapter board to allow the LCD to stand upright.

In summary, the LCD adapter board and ESP32-P4-Function-EV-Board are connected via the following pins:

LCD Adapter Board	ESP32-P4-Function-EV
J3 header	MIPI DSI connector
RST_LCD pin of J6 header	GPIO27 pin of J1 header
PWM pin of J6 header	GPIO26 pin of J1 header
5V pin of J6 header	5V pin of J1 header
GND pin of J6 header	GND pin of J1 header

Note:

- If you power the LCD adapter board by connecting a USB cable to its J1 header, you do not need to connect its 5V and GND pins to the corresponding pins on the development board.
- To use the camera, connect the camera adapter board to the MIPI CSI connector on the development board using the camera ribbon cable (**forward direction**).

Software Setup To set up your development environment and flash an application example onto your board, please follow the instructions in ESP-IDF Get Started.

Hardware Reference

Block Diagram The block diagram below shows the components of ESP32-P4-Function-EV-Board and their interconnections.

Power Supply Options Power can be supplied through any of the following ports:

- USB 2.0 Type-C Port
- USB Full-speed Port
- USB Serial/JTAG Port

If the USB cable used for debugging cannot provide enough current, you can connect the board to a power adapter via any available USB Type-C port.

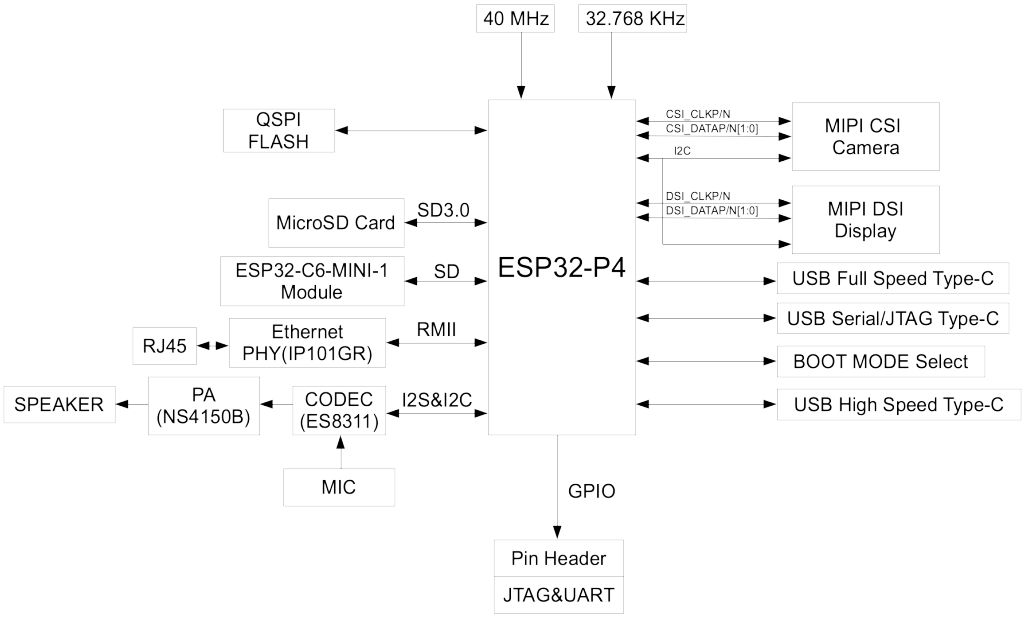

Fig. 5: ESP32-P4-Function-EV-Board Block Diagram (click to enlarge)

Header Block The tables below provide the **Name** and **Function** of the pin header J1 of the board. The pin header names are shown in Figure *ESP32-P4-Function-EV-Board - front (click to enlarge)*. The numbering is the same as in the ESP32-P4-Function-EV-Board Schematic.

No.	Name	Type[Page 53, 1]	Function
1	3V3	P	3.3 V power supply
2	5V	P	5 V power supply
3	7	I/O/T	GPIO7
4	5V	P	5 V power supply
5	8	I/O/T	GPIO8
6	GND	GND	Ground
7	23	I/O/T	GPIO23
8	37	I/O/T	U0TXD, GPIO37
9	GND	GND	Ground
10	38	I/O/T	U0RXD, GPIO38
11	21	I/O/T	GPIO21
12	22	I/O/T	GPIO22
13	20	I/O/T	GPIO20
14	GND	GND	Ground
15	6	I/O/T	GPIO6
16	5	I/O/T	GPIO5
17	3V3	P	3.3 V power supply
18	4	I/O/T	GPIO4
19	3	I/O/T	GPIO3
20	GND	GND	Ground

continues on next page

Table 1 – continued from previous page

No.	Name	Type[Page 53, 1]	Function
21	2	I/O/T	GPIO2
22	NC(1)	I/O/T	GPIO1[2]
23	NC(0)	I/O/T	GPIO0[2]
24	36	I/O/T	GPIO36
25	GND	GND	Ground
26	32	I/O/T	GPIO32
27	NC	–	No connection
28	NC	–	No connection
29	33	I/O/T	GPIO33
30	GND	GND	Ground
31	26	I/O/T	GPIO26
32	54	I/O/T	GPIO54
33	48	I/O/T	GPIO48
34	GND	GND	Ground
35	53	I/O/T	GPIO53
36	46	I/O/T	GPIO46
37	47	I/O/T	GPIO47
38	27	I/O/T	GPIO27
39	GND	GND	Ground
40	NC(45)	I/O/T	GPIO45[3]

J1

Hardware Revision Details

Initial release

Note: The main improvements in development board version v1.52 compared to v1.4 include: replacing the USB-to-UART Type-C port used for debugging with the ESP32-P4 chip's built-in USB Serial/JTAG port, adding a Full-speed USB OTG breakout to a Type-C port, and removing IO24 and IO25 from the pin headers.

Related Documents

Please download the following documents from the HTML version of esp-dev-kits Documentation.

- ESP32-P4-Function-EV-Board Schematic (PDF)
- ESP32-P4-Function-EV-Board PCB Layout (PDF)
- ESP32-P4-Function-EV-Board Assembly (PDF)
- ESP32-P4-Function-EV-Board Dimensions (PDF)
- ESP32-P4-Function-EV-Board Dimensions source file (DXF) - You can view it with Autodesk Viewer online
- 1.0K-GT-15PB Specification (PDF)
- Camera Datasheet (PDF)
- Display Datasheet (PDF)
- Datasheet of display driver chip EK73217BCGA (PDF)
- Datasheet of display driver chip EK79007AD (PDF)
- LCD Adapter Board Schematic (PDF)
- LCD Adapter Board PCB Layout (PDF)
- Camera Adapter Board Schematic (PDF)
- Camera Adapter Board PCB Layout (PDF)

[1] P: Power supply; I: Input; O: Output; T: High impedance.

[2] GPIO0 and GPIO1 can be enabled by disabling the XTAL_32K function, which can be achieved by moving R61 and R59 to R199 and R197, respectively.

[3] GPIO45 can be enabled by disabling the SD_PWRn function, which can be achieved by moving R231 to R100.

For further design documentation for the board, please contact us at sales@espressif.com.

ESP32-P4-Function-EV-Board v1.4

New version available: *ESP32-P4-Function-EV-Board v1.5.2*

Note: If you are using ESP32-P4X-Function-EV-Board with chip revision v3.x, please refer to this *user guide*.

The version number v1.4 refers to the board hardware version. To identify the embedded chip revision, refer to ESP32-P4 Series SoC Errata > Chip Revision Identification.

This user guide will help you get started with ESP32-P4-Function-EV-Board and will also provide more in-depth information.

ESP32-P4-Function-EV-Board is a multimedia development board based on the ESP32-P4 chip. ESP32-P4 chip features a dual-core RISC-V processor and supports up to 32 MB PSRAM. In addition, ESP32-P4 supports USB 2.0 specification, MIPI-CSI/DSI, H264 Encoder, and various other peripherals. With all of its outstanding features, the board is an ideal choice for developing low-cost, high-performance, low-power network-connected audio and video products.

The 2.4 GHz Wi-Fi 6 & Bluetooth 5 (LE) module ESP32-C6-MINI-1 serves as the Wi-Fi and Bluetooth module of the board. The board also includes a 7-inch capacitive touch screen with a resolution of 1024 x 600 and a 2MP camera with MIPI CSI, enriching the user interaction experience. The development board is suitable for prototyping a wide range of products, including visual doorbells, network cameras, smart home central control screens, LCD electronic price tags, two-wheel vehicle dashboards, etc.

Most of the I/O pins are broken out to the pin headers for easy interfacing. Developers can connect peripherals with jumper wires.

The document consists of the following major sections:

- *Getting Started*: Overview of ESP32-P4-Function-EV-Board and hardware/software setup instructions to get started.
- *Hardware Reference*: More detailed information about the ESP32-P4-Function-EV-Board' s hardware.
- *Hardware Revision Details*: Revision history, known issues, and links to user guides for previous versions (if any) of ESP32-P4-Function-EV-Board.
- *Related Documents*: Links to related documentation.
- *Disclaimer and Copyright Notice*: Link to the disclaimer and copyright notice.

Getting Started This section provides a brief introduction to ESP32-P4-Function-EV-Board, instructions on how to do the initial hardware setup and how to flash firmware onto it.

Description of Components The key components of the board are described in a clockwise direction.

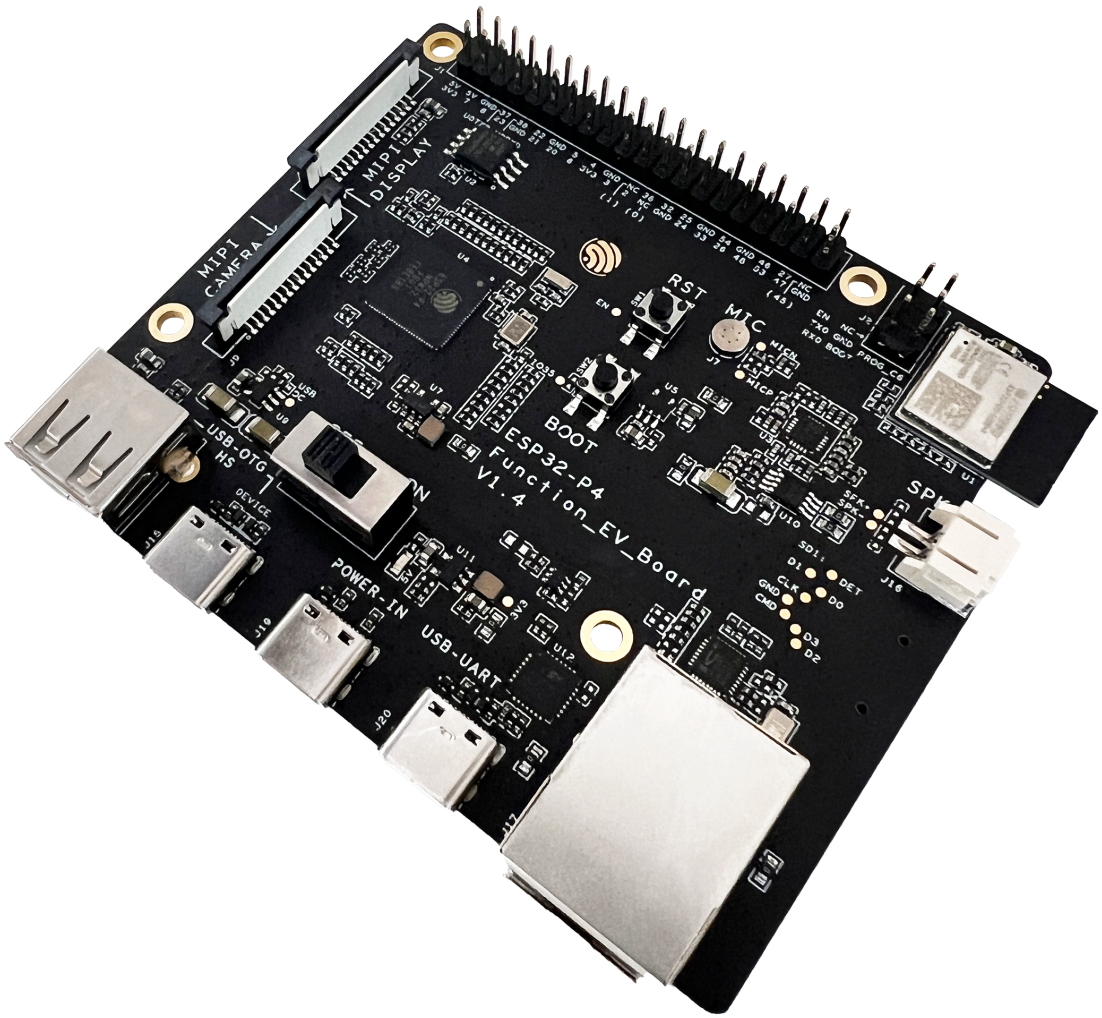

Fig. 6: ESP32-P4-Function-EV-Board

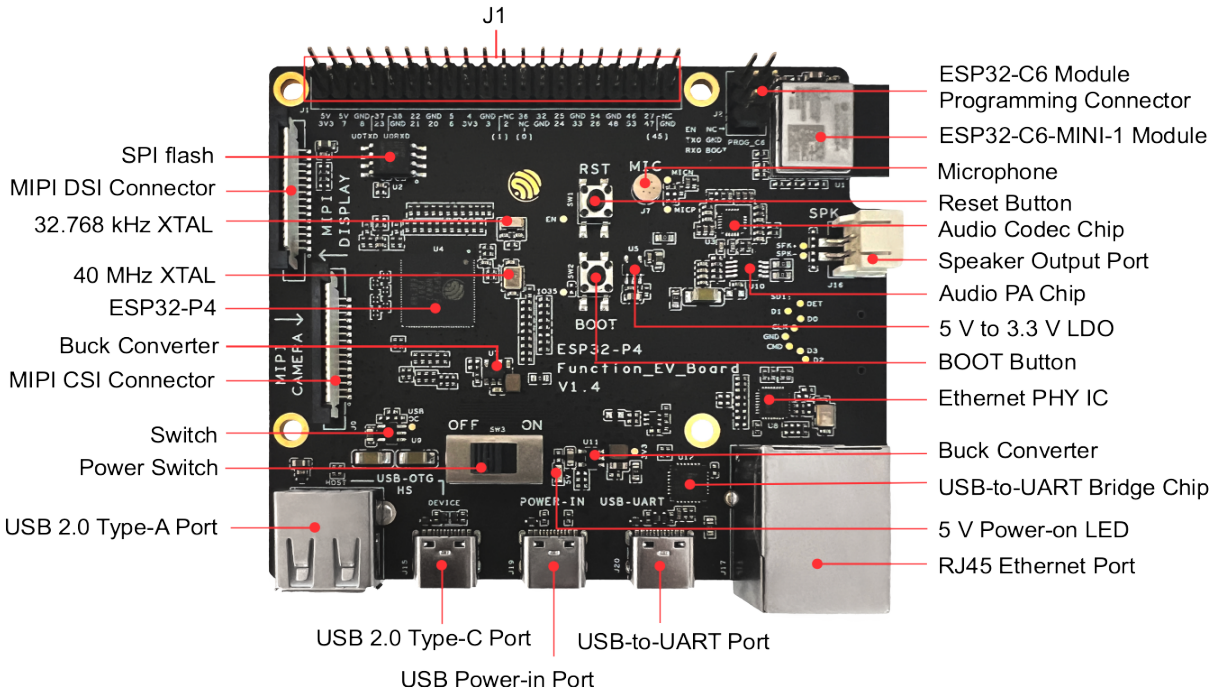

Fig. 7: ESP32-P4-Function-EV-Board - front (click to enlarge)

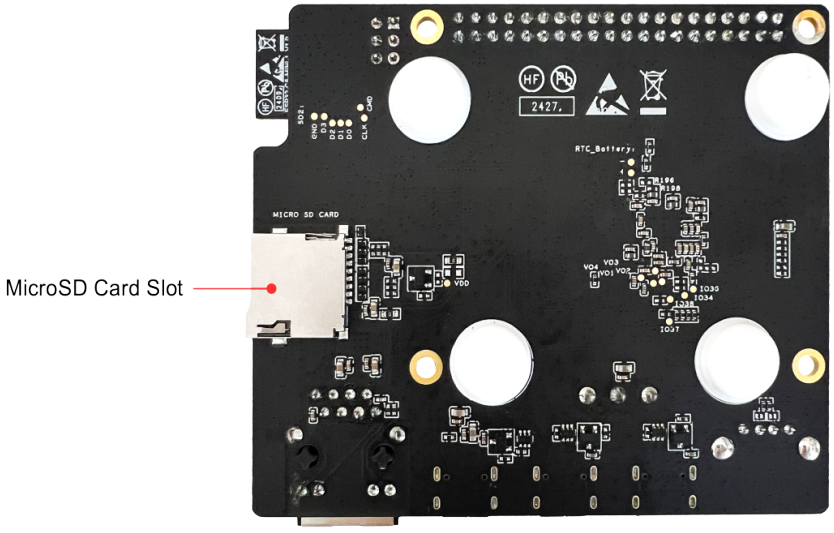

Fig. 8: ESP32-P4-Function-EV-Board - back (click to enlarge)

Key Component	Description
J1	All available GPIO pins are broken out to the header block J1 for easy interfacing. For more details, see *Header Block*.
ESP32-C6 Module Programming Connector	The connector can be used with ESP-Prog or other UART tools to flash firmware onto the ESP32-C6 module.
ESP32-C6-MINI-1 Module	This module serves as the Wi-Fi and Bluetooth communication module for the board.
Microphone	Onboard microphone connected to the interface of Audio Codec Chip.
Reset Button	Resets the board.
Audio Codec Chip	ES8311 is a low-power mono audio codec chip. It includes a single-channel ADC, a single-channel DAC, a low-noise pre-amplifier, a headphone driver, digital sound effects, analog mixing, and gain functions. It interfaces with the ESP32-P4 chip over I2S and I2C buses to provide hardware audio processing independent of the audio application.
Speaker Output Port	This port is used to connect a speaker. The maximum output power can drive a 4 Ω, 3 W speaker. The pin spacing is 2.00 mm (0.08”).
Audio PA Chip	NS4150B is an EMI-compliant, 3 W mono Class D audio power amplifier that amplifies audio signals from the audio codec chip to drive speakers.
5 V to 3.3 V LDO	A power regulator that converts a 5 V supply to a 3.3 V output.
BOOT Button	The boot mode control button. Press the **Reset Button** while holding down the **Boot Button** to reset ESP32-P4 and enter firmware download mode. Firmware can then be downloaded to SPI flash via the USB-to-UART Port.
Ethernet PHY IC	Ethernet PHY chip connected to the ESP32-P4 EMAC RMII interface and RJ45 Ethernet Port.
Buck Converter	A buck DC-DC converter for the 3.3 V power supply.
USB-to-UART Bridge Chip	CP2102N is a single USB-to-UART bridge chip connected to the ESP32-P4 UART0 interface, CHIP_PU, and GPIO35 (strapping pin). It provides transfer rates up to 3 Mbps for firmware downloading and debugging, supporting the automatic download functionality.
5 V Power-on LED	This LED lights up when the board is powered through any USB Type-C port.
RJ45 Ethernet Port	An Ethernet Port supporting 10/100 Mbps adaptive.
USB-to-UART Port	The USB Type-C port can be used to power the board, flash firmware to the chip, and communicate with the ESP32-P4 chip via the USB-to-UART Bridge Chip.
USB Power-in Port	The USB Type-C port used to power the board.
USB 2.0 Type-C Port	The USB 2.0 Type-C Port is connected to the USB 2.0 OTG High-Speed interface of ESP32-P4, compliant with the USB 2.0 specification. When communicating with other devices via this port, ESP32-P4 acts as a USB device connecting to a USB host. Please note that USB 2.0 Type-C Port and USB 2.0 Type-A Port cannot be used simultaneously. USB 2.0 Type-C Port can also be used for powering the board.
USB 2.0 Type-A Port	The USB 2.0 Type-A Port is connected to the USB 2.0 OTG High-Speed interface of ESP32-P4, compliant with the USB 2.0 specification. When communicating with other devices via this port, ESP32-P4 acts as a USB host, providing up to 500 mA of current. Please note that USB 2.0 Type-C Port and USB 2.0 Type-A Port cannot be used simultaneously.

Key Component	Description
Power Switch	Power On/Off Switch. Toggling toward the ON sign powers the board on (5 V), toggling away from the ON sign powers the board off.
Switch	TPS2051C is a USB power switch that provides a 500 mA output current limit.
MIPI CSI Connector	The FPC connector 1.0K-GT-15PB is used for connecting external camera modules to enable image transmission. For details, please refer to 1.0K-GT-15PB specification in Related Documents. FPC specifications: 1.0 mm pitch, 0.7 mm pin width, 0.3 mm thickness, 15 pins.
Buck Converter	A buck DC-DC converter for VDD_HP power supply of ESP32-P4.
ESP32-P4	A high-performance MCU with large internal memory and powerful image and voice processing capabilities.
40 MHz XTAL	An external precision 40 MHz crystal oscillator that serves as a clock for the system.
32.768 kHz XTAL	An external precision 32.768 kHz crystal oscillator that serves as a low-power clock while the chip is in deep-sleep mode.
MIPI DSI Connector	The FPC connector 1.0K-GT-15PB is used for connecting displays. For details, please refer to 1.0K-GT-15PB Specification in Related Documents. FPC specifications: 1.0 mm pitch, 0.7 mm pin width, 0.3 mm thickness, 15 pins.
SPI flash	The 16 MB flash is connected to the chip via the SPI interface.
MicroSD Card Slot	The development board supports a MicroSD card in 4-bit mode and can store or play audio files from the MicroSD card.

Accessories Optionally, the following accessories are included in the package:

- LCD and its accessories (optional)
  - 7-inch capacitive touch screen with a resolution of 1024 x 600
  - LCD adapter board
  - Accessories bag, including DuPont wires, ribbon cable for LCD, long standoffs (20 mm in length), and short standoffs (8 mm in length)
- Camera and its accessories (optional)
  - 2MP camera with MIPI CSI
  - Camera adapter board
  - Ribbon cable for camera

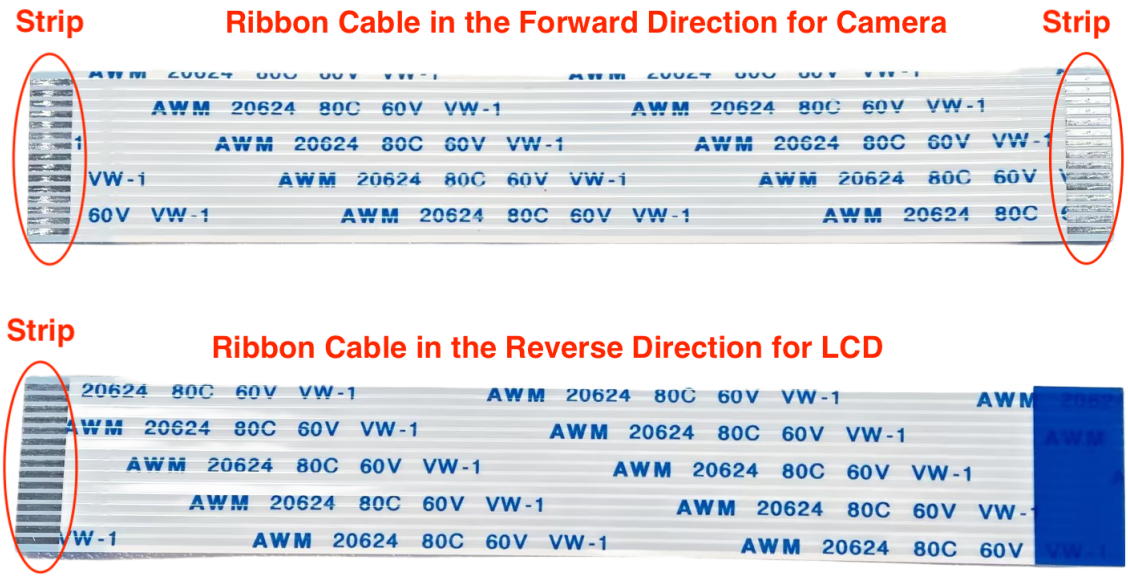

Fig. 9: Ribbon Cables in Forward and Reverse Directions

Note: Please note that the ribbon cable in the **forward direction**, whose strips at the two ends are on the same side, should be used for the **camera**; the ribbon cable in the **reverse direction**, whose strips at the two ends are on different sides, should be used for the **LCD**.

Application Examples The following application examples are available for ESP32-P4-Function-EV-Board v1.4:

- ESP_Brookesia Phone - Demonstrates an Android-like interface with multiple applications using ESP_Brookesia, utilizing MIPI-DSI, MIPI-CSI, ESP32-C6, SD card, and audio interfaces on a development board, providing a basis for efficient multimedia application development.
- LVGL Demo v8 - Demonstrates how to port LVGL v8 and conduct performance testing using LVGL' s built-in demos on an ESP32-P4-Function-EV-Board with a 7-inch LCD screen, serving as a foundation for developing applications based on LVGL v8.
- LVGL Demo v9 - Demonstrates how to port LVGL v9 and conduct performance testing using LVGL' s built-in demos on an ESP32-P4-Function-EV-Board, serving as a basis for developing applications based on LVGL v9.

For more examples and the latest updates, please refer to the examples folder.

To explore the application examples or to develop your own, please follow the steps outlined in the *Start Application Development* section.

Start Application Development Before powering up your ESP32-P4-Function-EV-Board, please make sure that it is in good condition with no obvious signs of damage.

Required Hardware

- ESP32-P4-Function-EV-Board
- USB cables
- Computer running Windows, Linux, or macOS

Note: Be sure to use a good quality USB cable. Some cables are for charging only and do not provide the needed data lines nor work for programming the boards.

Optional Hardware

- MicroSD card

Hardware Setup Connect the ESP32-P4-Function-EV-Board to your computer using a USB cable. The board can be powered through any of the USB Type-C ports. The USB-to-UART Port is recommended for flashing firmware and debugging.

To connect the LCD, follow these steps:

1. Secure the development board to the LCD adapter board by attaching the short brass standoffs (8 mm in length) to the four standoff posts at the center of the LCD adapter board.
2. Connect the J3 header of the LCD adapter board to the MIPI DSI connector on the ESP32-P4-Function-EV-Board using the LCD ribbon cable (**reverse direction**). Note that the LCD adapter board is already connected to the LCD.
3. Use a DuPont wire to connect the RST_LCD pin of the J6 header of the LCD adapter board to the GPIO27 pin of the J1 header on the ESP32-P4-Function-EV-Board. The RST_LCD pin can be configured via software, with GPIO27 set as the default.
4. Use a DuPont wire to connect the PWM pin of the J6 header of the LCD adapter board to the GPIO26 pin of the J1 header on the ESP32-P4-Function-EV-Board. The PWM pin can be configured via software, with GPIO26 set as the default.

5. It is recommended to power the LCD by connecting a USB cable to the J1 header of the LCD adapter board. If this is not feasible, connect the 5V and GND pins of the LCD adapter board to corresponding pins on the J1 header of the ESP32-P4-Function-EV-Board, provided that the development board has sufficient power supply.
6. Attach the long brass standoffs (20 mm in length) to the four standoff posts on the periphery of the LCD adapter board to allow the LCD to stand upright.

In summary, the LCD adapter board and ESP32-P4-Function-EV-Board are connected via the following pins:

LCD Adapter Board	ESP32-P4-Function-EV
J3 header	MIPI DSI connector
RST_LCD pin of J6 header	GPIO27 pin of J1 header
PWM pin of J6 header	GPIO26 pin of J1 header
5V pin of J6 header	5V pin of J1 header
GND pin of J6 header	GND pin of J1 header

Note:

- If you power the LCD adapter board by connecting a USB cable to its J1 header, you do not need to connect its 5V and GND pins to the corresponding pins on the development board.
- To use the camera, connect the camera adapter board to the MIPI CSI connector on the development board using the camera ribbon cable (**forward direction**).

Software Setup To set up your development environment and flash an application example onto your board, please follow the instructions in ESP-IDF Get Started.

Hardware Reference

Block Diagram The block diagram below shows the components of ESP32-P4-Function-EV-Board and their interconnections.

Power Supply Options Power can be supplied through any of the following ports:

- USB 2.0 Type-C Port
- USB Power-in Port
- USB-to-UART Port

If the USB cable used for debugging cannot provide enough current, you can connect the board to a power adapter via any available USB Type-C port.

Header Block The tables below provide the **Name** and **Function** of the pin header J1 of the board. The pin header names are shown in Figure *ESP32-P4-Function-EV-Board - front (click to enlarge)*. The numbering is the same as in the ESP32-P4-Function-EV-Board v1.4 Schematic.

No.	Name	Type[Page 61, 1]	Function
1	3V3	P	3.3 V power supply
2	5V	P	5 V power supply
3	7	I/O/T	GPIO7
4	5V	P	5 V power supply
5	8	I/O/T	GPIO8

continues on next page

Table 2 – continued from previous page

No.	Name	Type[Page 61, 1]	Function
6	GND	GND	Ground
7	23	I/O/T	GPIO23
8	37	I/O/T	U0TXD, GPIO37
9	GND	GND	Ground
10	38	I/O/T	U0RXD, GPIO38
11	21	I/O/T	GPIO21
12	22	I/O/T	GPIO22
13	20	I/O/T	GPIO20
14	GND	GND	Ground
15	6	I/O/T	GPIO6
16	5	I/O/T	GPIO5
17	3V3	P	3.3 V power supply
18	4	I/O/T	GPIO4
19	3	I/O/T	GPIO3
20	GND	GND	Ground
21	2	I/O/T	GPIO2
22	NC(1)	I/O/T	GPIO1[2]
23	NC(0)	I/O/T	GPIO0[2]
24	36	I/O/T	GPIO36
25	GND	GND	Ground
26	32	I/O/T	GPIO32
27	24	I/O/T	GPIO24
28	25	I/O/T	GPIO25
29	33	I/O/T	GPIO33
30	GND	GND	Ground
31	26	I/O/T	GPIO26
32	54	I/O/T	GPIO54
33	48	I/O/T	GPIO48
34	GND	GND	Ground
35	53	I/O/T	GPIO53
36	46	I/O/T	GPIO46
37	47	I/O/T	GPIO47
38	27	I/O/T	GPIO27
39	GND	GND	Ground
40	NC(45)	I/O/T	GPIO45[3]

J1

Hardware Revision Details No previous versions available.

Related Documents Please download the following documents from the HTML version of esp-dev-kits Documentation.

- ESP32-P4-Function-EV-Board v1.4 Schematic (PDF)
- ESP32-P4-Function-EV-Board v1.4 PCB Layout (PDF)
- ESP32-P4-Function-EV-Board v1.4 Dimensions (PDF)
- ESP32-P4-Function-EV-Board v1.4 Dimensions source file (DXF) - You can view it with Autodesk Viewer online
- 1.0K-GT-15PB Specification (PDF)
- Camera Datasheet (PDF)

[1] P: Power supply; I: Input; O: Output; T: High impedance.
[2] GPIO0 and GPIO1 can be enabled by disabling the XTAL_32K function, which can be achieved by moving R61 and R59 to R199 and R197, respectively.
[3] GPIO45 can be enabled by disabling the SD_PWRn function, which can be achieved by moving R231 to R100.

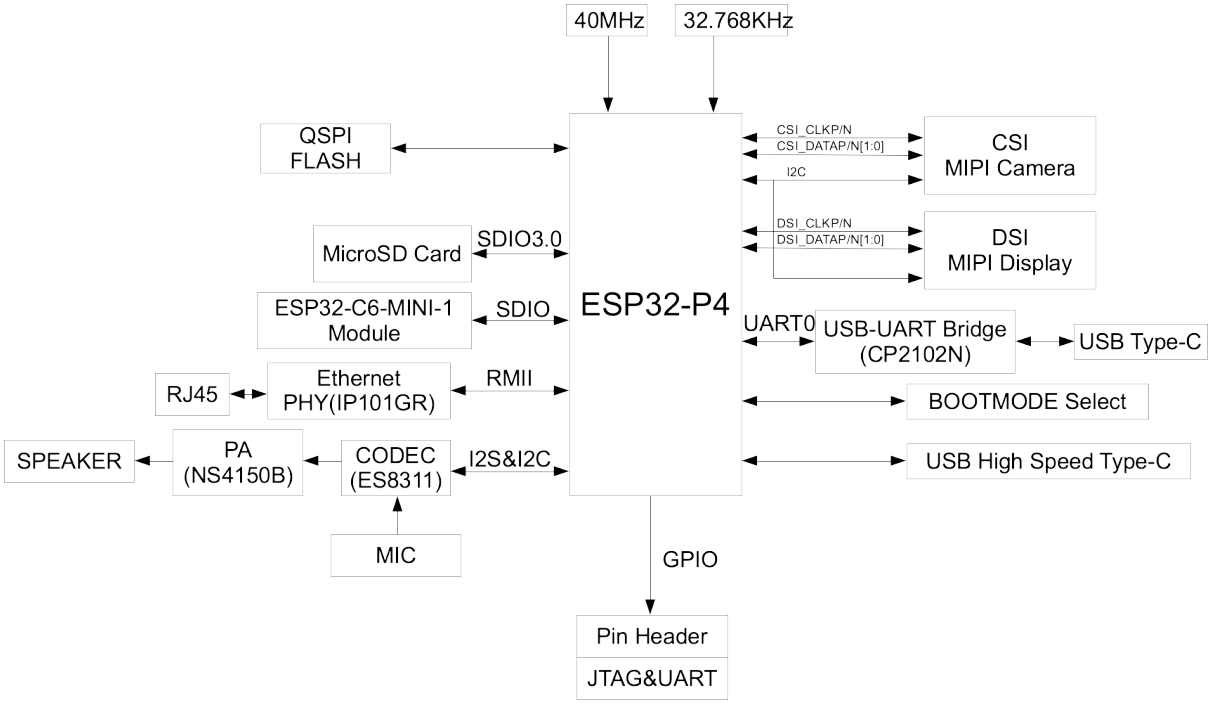

Fig. 10: ESP32-P4-Function-EV-Board v1.4 (click to enlarge)

- Display Datasheet (PDF)
- Datasheet of display driver chip EK73217BCGA (PDF)
- Datasheet of display driver chip EK79007AD (PDF)
- LCD Adapter Board Schematic (PDF)
- LCD Adapter Board PCB Layout (PDF)
- Camera Adapter Board Schematic (PDF)
- Camera Adapter Board PCB Layout (PDF)

For further design documentation for the board, please contact us at sales@espressif.com.

Disclaimer and Copyright Notice See *Disclaimer and Copyright Notice*.

Disclaimer and Copyright Notice

See *Disclaimer and Copyright Notice*.

4.2 ESP32-P4-EYE

ESP32-P4-EYE is a vision development board based on the ESP32-P4 chip, mainly targeting camera applications.

You can find examples for ESP32-P4-EYE by accessing Examples .

4.2.1 ESP32-P4-EYE

Note: If you are using ESP32-P4X-EYE with chip revision v3.x, please refer to this *user guide*.

To identify the embedded chip revision, refer to ESP32-P4 Series SoC Errata > Chip Revision Identification.

This user guide will help you get started with ESP32-P4-EYE and will also provide more in-depth information.

ESP32-P4-EYE is a vision development board based on the ESP32-P4 chip, mainly targeting camera applications. ESP32-P4 features a dual-core RISC-V processor and supports up to 32 MB of PSRAM. In addition, ESP32-P4 supports USB 2.0 standard, MIPI-CSI/DSI, H264 Encoder, and various other peripherals. With all of its outstanding features, the board is an ideal choice for developing low-cost, high-performance, low-power network-connected audio and video products.

The board integrates the ESP32-C6-MINI-1U module for Wi-Fi and Bluetooth communication. It supports MIPI-CSI camera interface and USB 2.0 High-Speed device mode. Rich onboard features include a camera, display, microphone, and MicroSD card, enabling real-time monitoring of the environment and collection of image and audio data. It is suitable for applications such as smart surveillance cameras, vision model detection, and edge computing in IoT that require real-time image processing and wireless communication.

Most of the I/O pins are broken out to the pin header for easy interfacing. Developers can connect peripherals with jumper wires.



Fig. 11: ESP32-P4-EYE Front View (click to enlarge)

This guide includes the following sections:

- *Getting Started*: Overview of ESP32-P4-EYE and hardware/software setup instructions to get started.
- *Hardware Reference*: More detailed information about the ESP32-P4-EYE's hardware.
- *Hardware Revision Details*: Revision history, known issues, and links to user guides for previous versions (if any) of ESP32-P4-EYE.



Fig. 12: ESP32-P4-EYE Back View (click to enlarge)

- *Related Documents*: Links to related documentation.
- *Disclaimer and Copyright Notice*: Link to the disclaimer and copyright notice.

Getting Started

This section provides a brief introduction to ESP32-P4-EYE, instructions on how to do the initial hardware setup and how to flash firmware onto it.

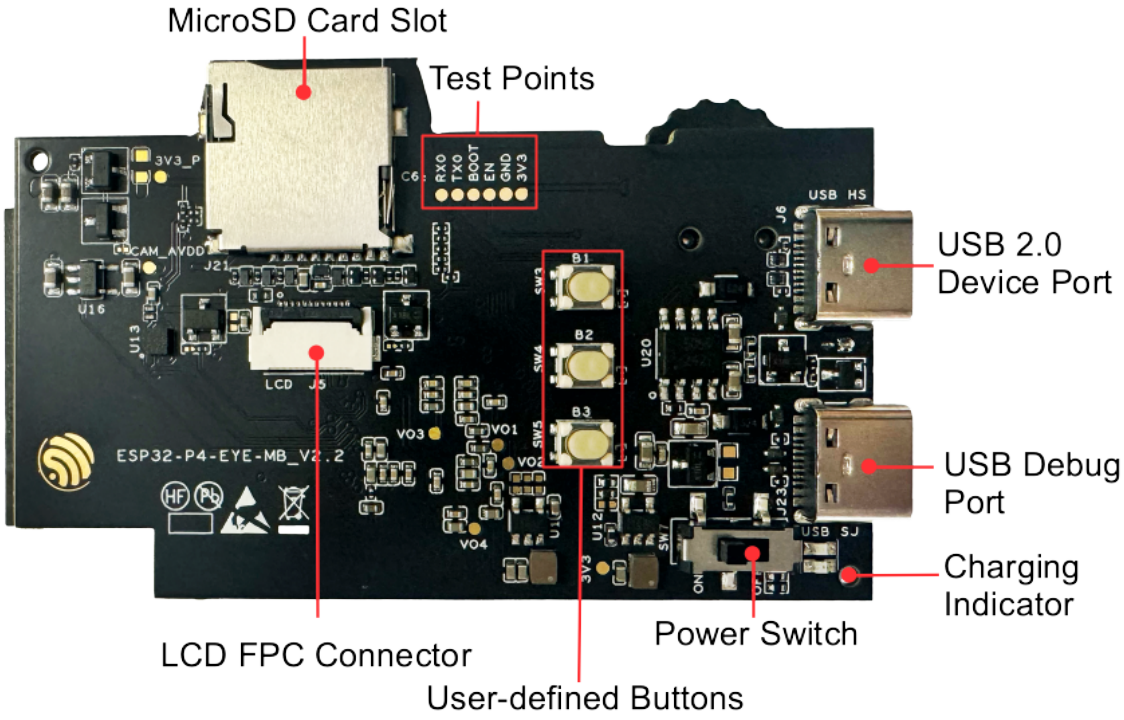

Fig. 13: ESP32-P4-EYE PCB Top View (click to enlarge)

Description of Components The key components of the top PCB are described in a clockwise direction. To facilitate use, these components or interfaces are also marked on the ESP32-P4-EYE enclosure.

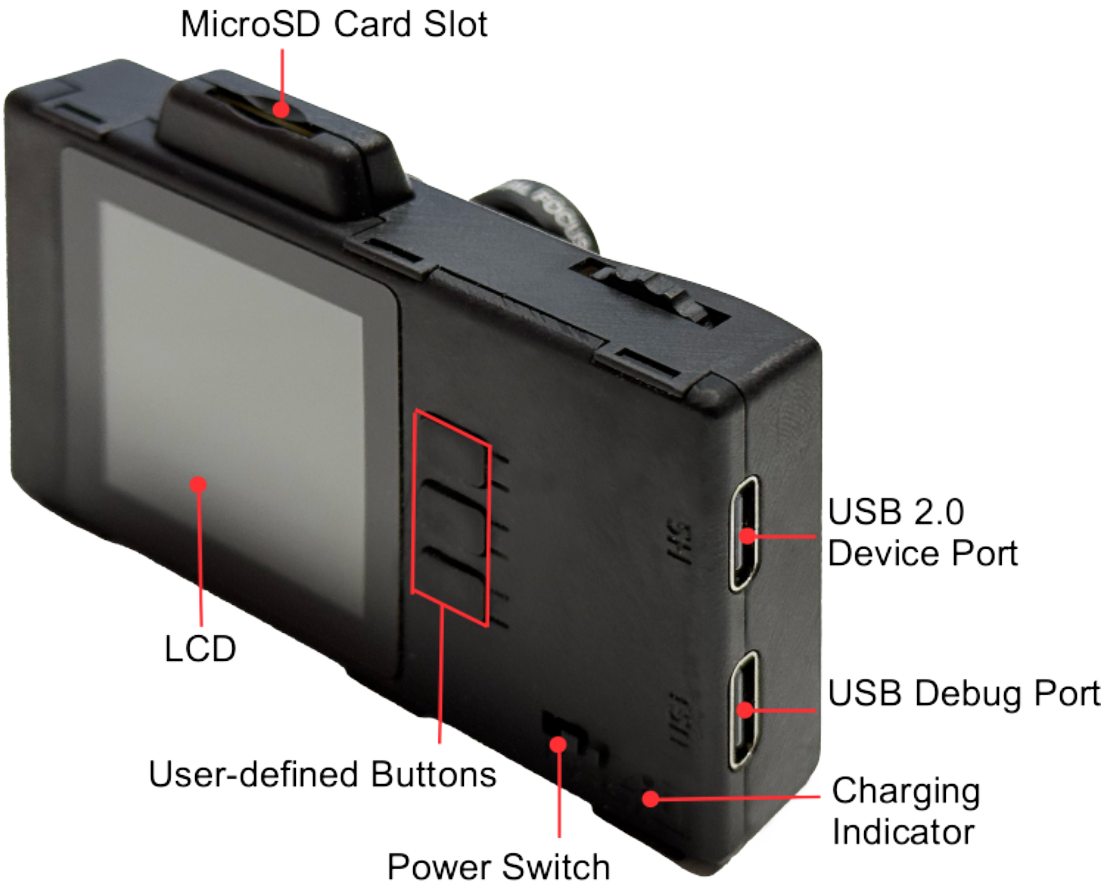

Fig. 14: ESP32-P4-EYE Front View (click to enlarge)

Key Component	Description
MicroSD Card Slot	Supports a MicroSD card through 4-line SD bus with SDIO protocol or SPI protocol.
Test Points	Provides access points for programming and testing the ESP32-C6-MINI-1U; can be connected via Dupont wires.
USB 2.0 Device Port	Connected to the USB 2.0 OTG High-Speed interface of ESP32-P4, compliant with the USB 2.0 specification. When communicating with other devices via this port, ESP32-P4 acts as a USB device connecting to a USB host. USB 2.0 Device Port can also be used for powering the board. Marked with `USB 2.0` on the enclosure.
USB Debug Port	Used for board power, firmware flashing, and connecting to USB-Serial-JTAG interface of ESP32-P4. Marked with `Debug` on the enclosure.
Power Switch	Flip to "I" to power on the board with 5 V input; flip to "O" to power off.
User-defined Buttons	Customizable by user application.
LCD FPC Connector	Connects to a 1.54-inch LCD screen.
LCD	1.54-inch LCD with 240 × 240 resolution and SPI interface, capable of displaying real-time images from the camera. For details, refer to Display Datasheet.
Charging Indicator	When the battery is charging, the indicator light is red; once charging is complete, the light turns green.

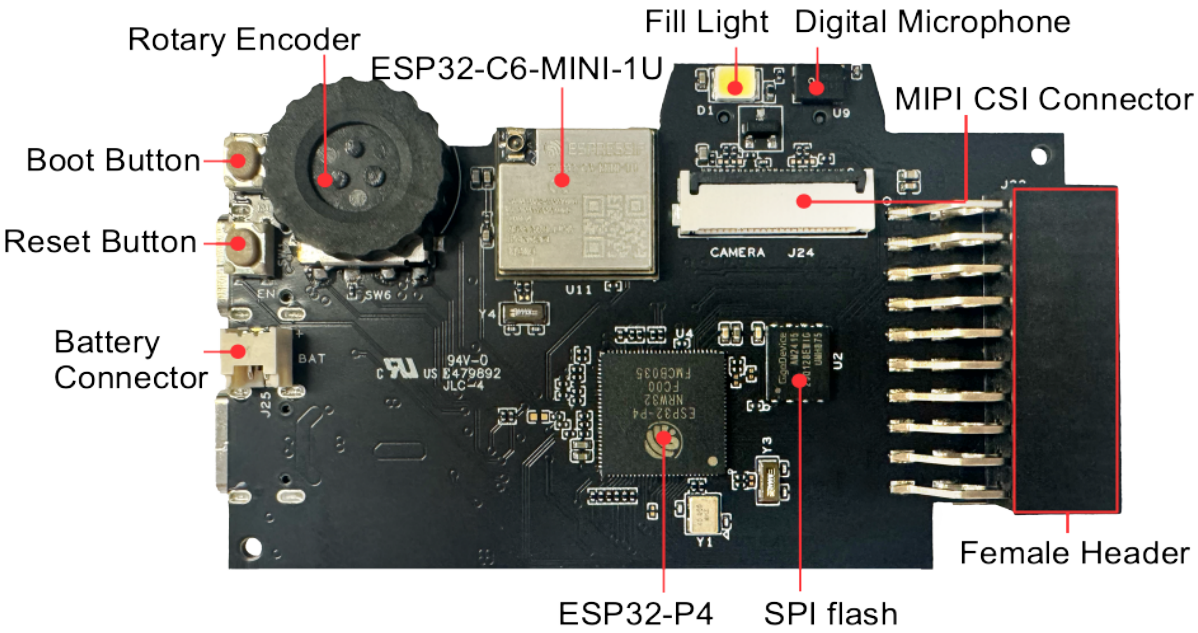

Fig. 15: ESP32-P4-EYE PCB Bottom View (click to enlarge)

The key components of the back PCB are described in a clockwise direction. To facilitate use, these components or interfaces are also marked on the ESP32-P4-EYE enclosure.

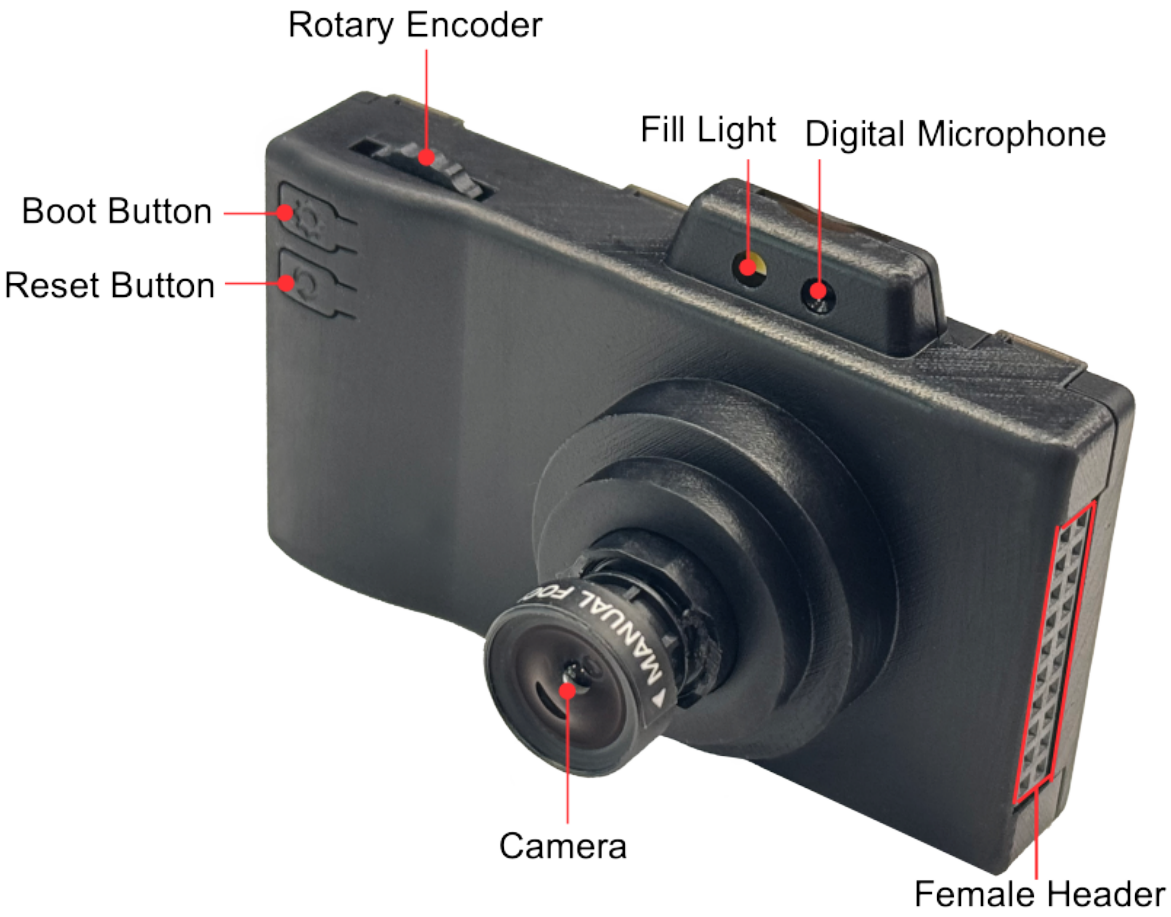

Fig. 16: ESP32-P4-EYE Back View (click to enlarge)

Key Component	Description
Rotary Encoder	You can customize functions based on your application, such as using it to control LCD interface or adjust camera zoom levels.
ESP32-C6-MINI-1U	Serves as the Wi-Fi and Bluetooth communication module.
Fill Light	Provides illumination for image capture and video recording.
Digital Microphone	Used for voice recognition or audio recording.
MIPI CSI Connector	Connects to the camera module.
Female Header	2 x 10P header, customizable based on application.
SPI flash	16 MB flash connected via the SPI interface.
ESP32-P4	High-performance MCU with large internal memory; supports advanced image and voice processing.
Battery Connector	Connects to a lithium battery.
Reset Button	Resets the board. Marked with ↻ on the enclosure.
Boot Button	Controls boot mode. Marked with ⍰ on the enclosure. Press the **Reset Button** while holding down the **Boot Button** to reset ESP32-P4 and enter firmware download mode. Firmware can then be downloaded to SPI flash via the USB Debug Port. In general applications, it can act as a confirmation button.
Camera	2 MP resolution with manually adjustable focal length. For details, refer to Camera Datasheet.

Application Examples The following application examples are available for ESP32-P4-EYE:

- Factory Demo - Demonstrates a comprehensive mini camera application for ESP32-P4-EYE that supports photo capture, timed capture, video recording, album preview, USB SD card mounting, image parameter configuration, and AI features including face detection, pedestrian detection, and YOLOv11-nano-based object detection.

For more examples and the latest updates, please refer to the examples folder.

To explore the application examples or to develop your own, please follow the steps outlined in the *Application Development* section.

Application Development Before powering up your ESP32-P4-EYE, please make sure that it is in good condition with no obvious signs of damage.

Required Hardware

- ESP32-P4-EYE
- USB cables
- Computer running Windows, Linux, or macOS

Note: Be sure to use a good quality USB cable. Some cables are for charging only and do not provide the needed data lines nor work for programming the boards.

Optional Hardware

- MicroSD card
- Lithium battery

Hardware Setup Connect ESP32-P4-EYE to your computer using a USB cable. The board can be powered through the `USB 2.0 Device Port` or `USB Debug Port`. The `USB Debug Port` is recommended for flashing firmware and debugging.

Software Setup To set up your development environment and flash an application example onto your board, please follow the installation instructions in ESP-IDF Get Started.

Hardware Reference

Functional Block Diagram The block diagram below shows the components of ESP32-P4-EYE and their interconnections.

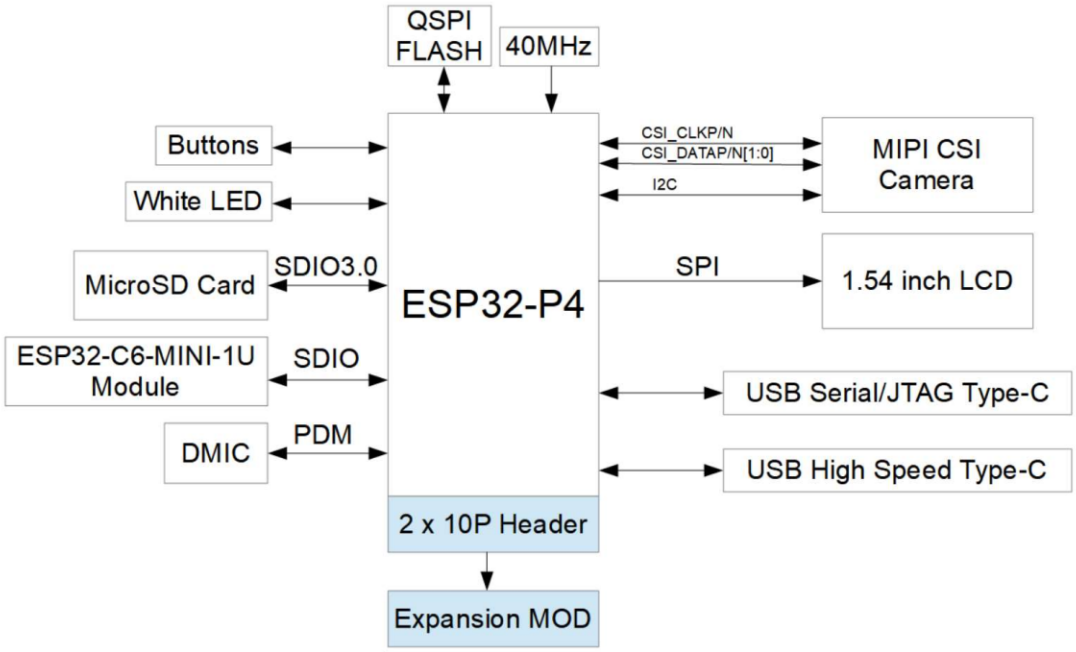

Fig. 17: ESP32-P4-EYE Functional Block Diagram (click to enlarge)

Power Supply Options ESP32-P4-EYE can be powered using the following methods:

1. Via the `USB 2.0 Device Port` or `USB Debug Port`

   Connect ESP32-P4-EYE to a power source using a USB Type-C cable through either of the two ports. If a lithium battery is already installed, it will be charged simultaneously.

2. Via the `Battery Connector`

   To use this method, first open the enclosure, then connect the battery to the Battery Connector. The lithium battery must not exceed 4 mm × 25 mm × 45 mm in size. It should use a 1.25 mm pitch connector, and the polarity must match the markings on the PCB.

Female Header

USB 2.0 Device Port Circuit

LCD Circuit Please note that this interface supports SPI displays. ESP32-P4-EYE features the ST7789, which uses the `LCD_BL` pin (GPIO20) to control the backlight.

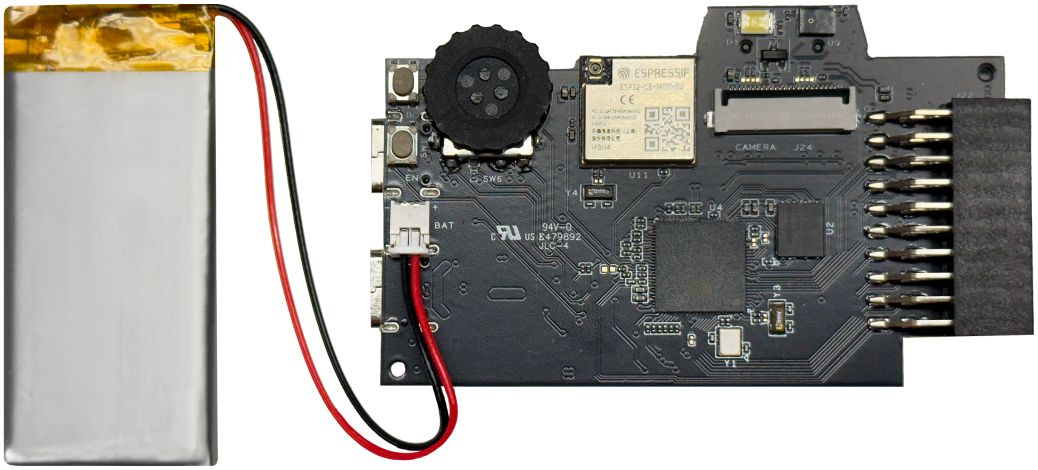

Fig. 18: Battery Connection (click to enlarge)



Fig. 19: Female Header (click to enlarge)

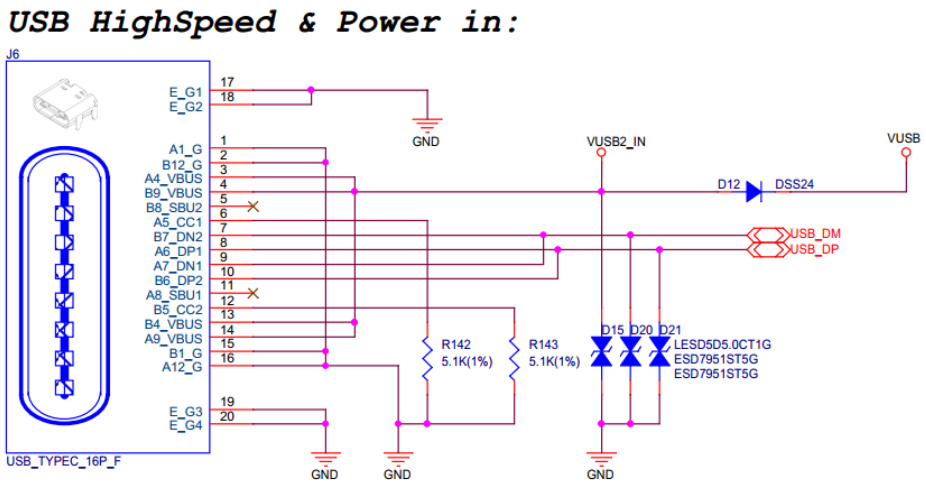

Fig. 20: USB 2.0 Device Port Circuit (click to enlarge)

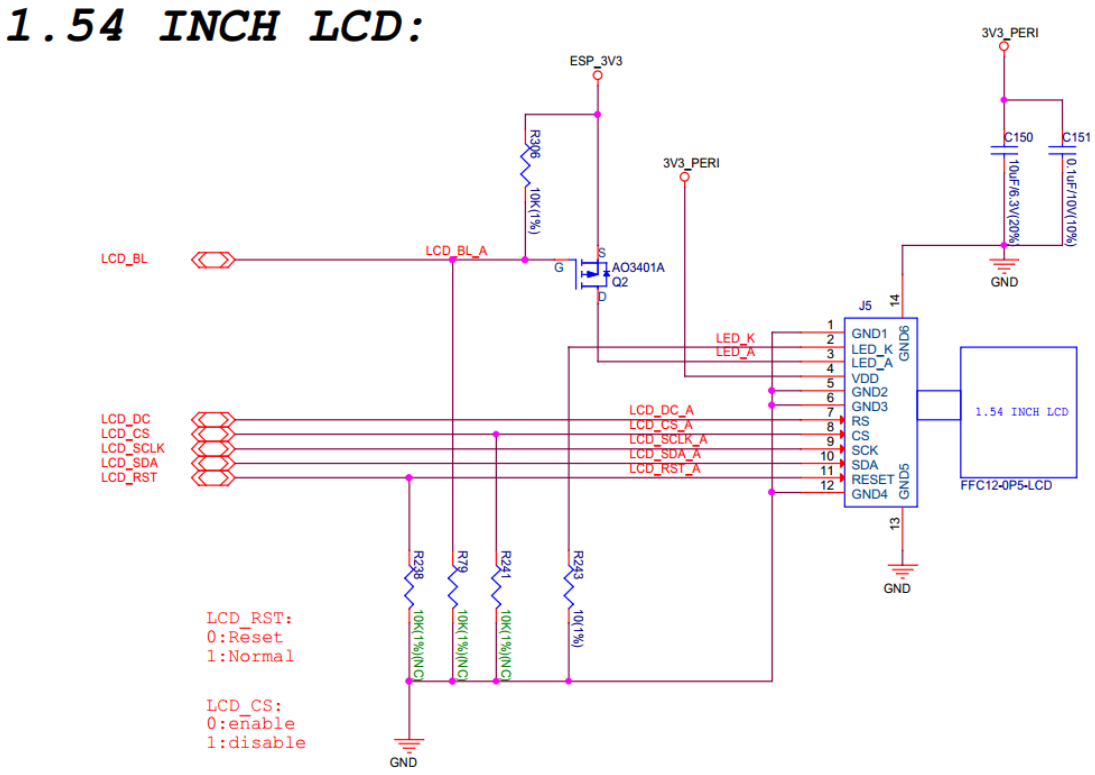

Fig. 21: LCD Circuit (click to enlarge)

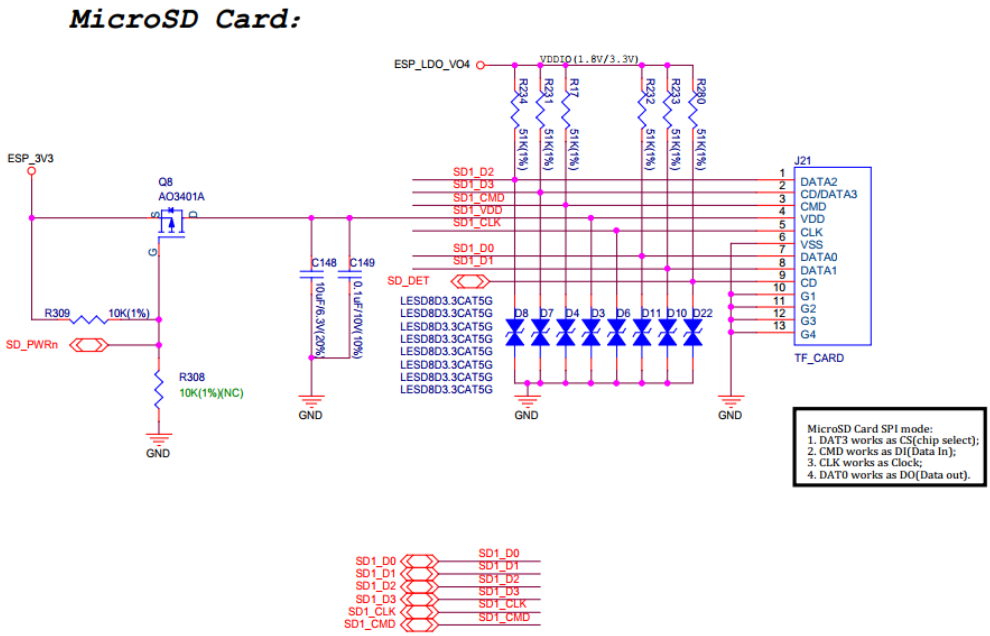

Fig. 22: MicroSD Card Slot Interface Circuit (click to enlarge)

MicroSD Card Slot Interface Circuit

Please note that the MicroSD card interface supports:

- 1-bit and 4-bit SD bus configurations
- Communication via SDIO protocol or SPI protocol

Charging Circuit

Microphone Circuit

Camera Circuit

Rotary Encoder Circuit

ESP32-C6-MINI-1U Module Circuit

Hardware Revision Details

No previous versions available.

Related Documents

Please download the following documents from the HTML version of esp-dev-kits Documentation.

- ESP32-P4-EYE Schematic (PDF)
- ESP32-P4-EYE PCB Layout (PDF)
- Camera Datasheet (PDF)
- Display Datasheet (PDF)
- ST7789VW Datasheet (PDF)

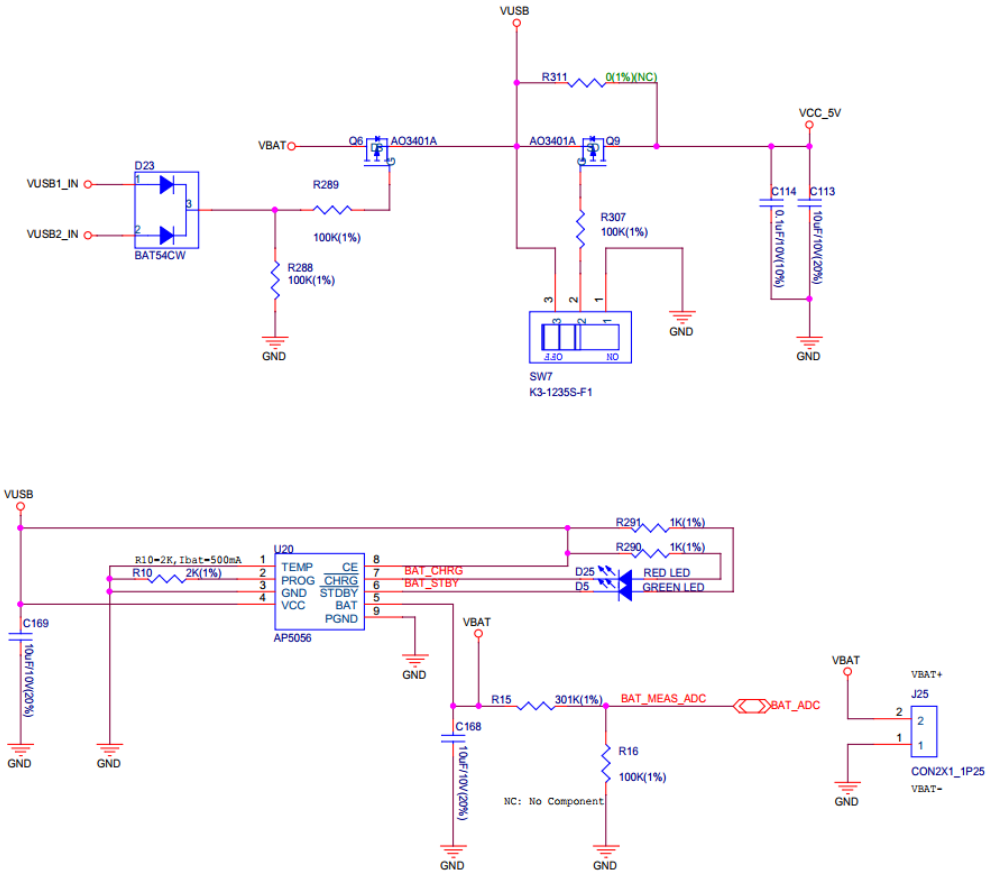

Fig. 23: Charging Circuit (click to enlarge)

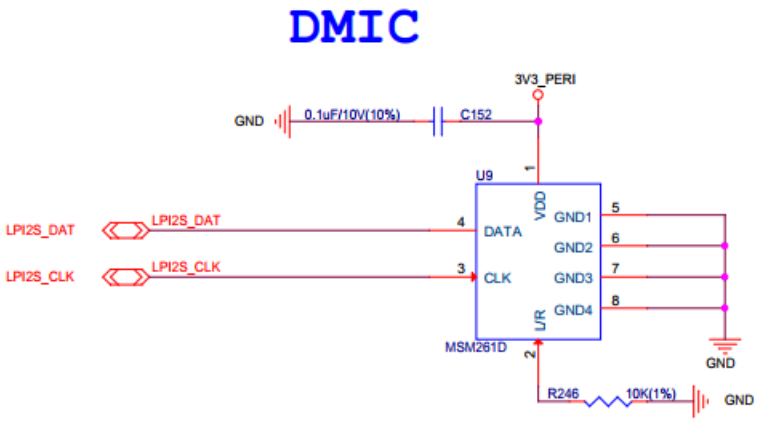

Fig. 24: Microphone Circuit (click to enlarge)

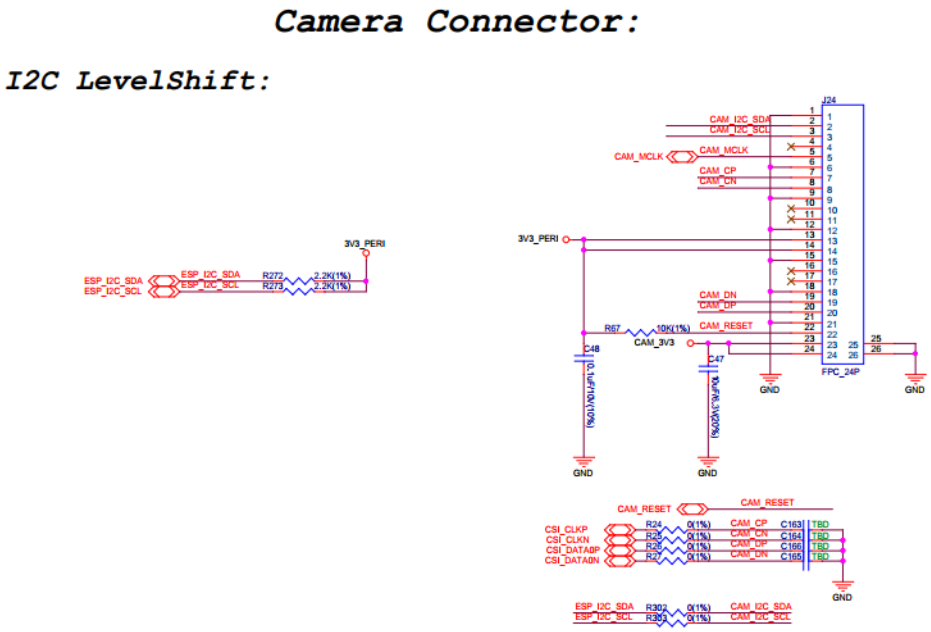

Fig. 25: Camera Circuit (click to enlarge)

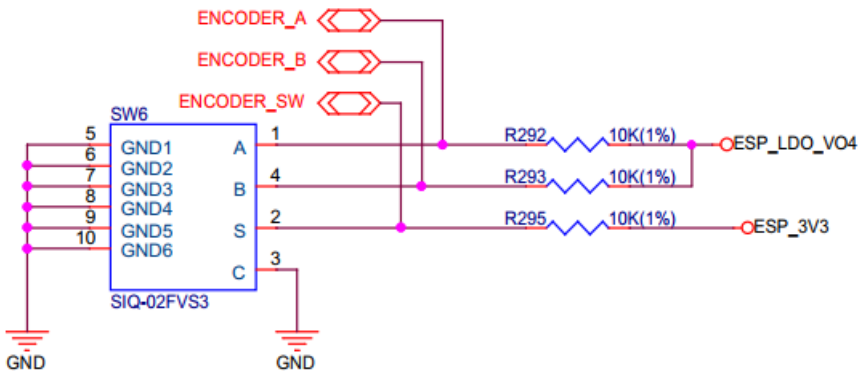

Fig. 26: Rotary Encoder Circuit (click to enlarge)

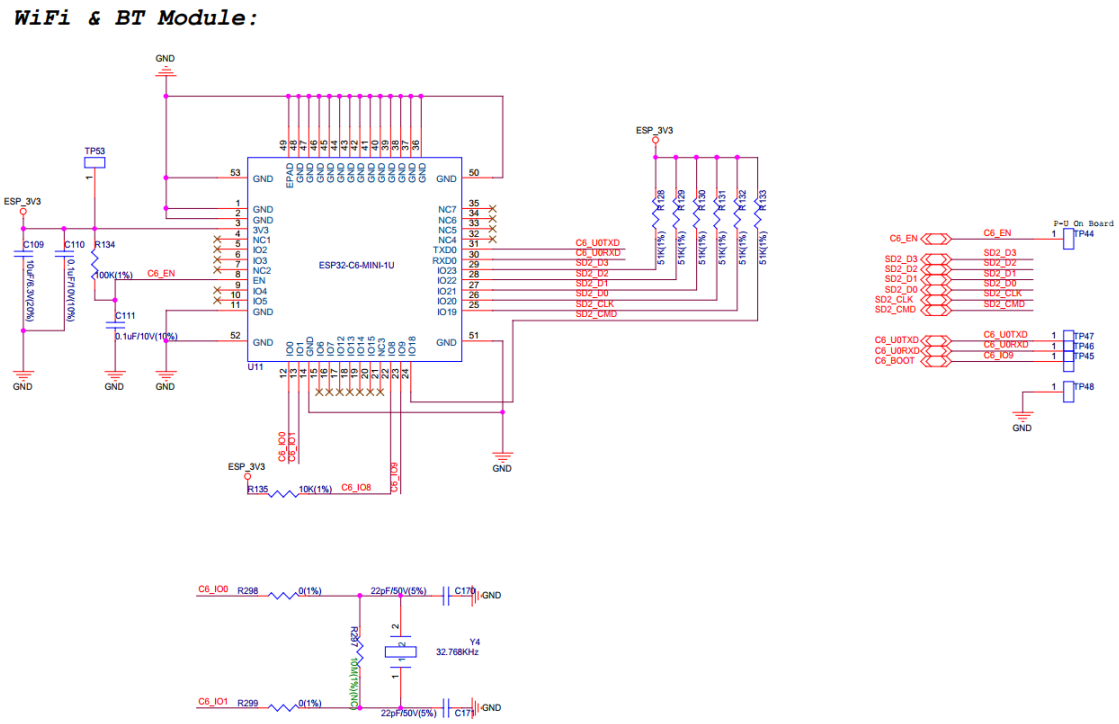

Fig. 27: ESP32-C6-MINI-1U Module Circuit (click to enlarge)

- OV2710 Overview (PDF)

Disclaimer and Copyright Notice

See *Disclaimer and Copyright Notice*.

ESP32-P4 Boards	
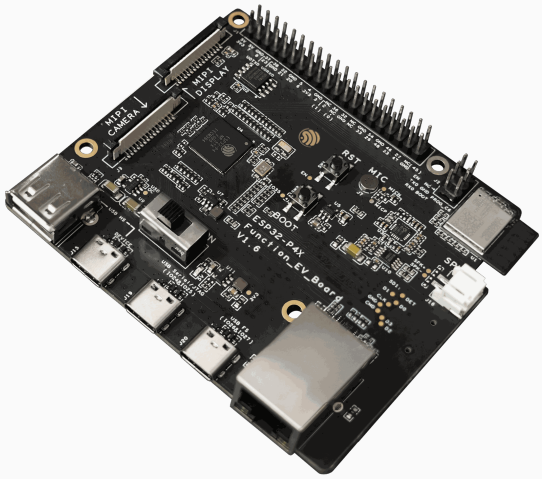	
ESP32-P4X-Function-EV-Board	ESP32-P4X-EYE
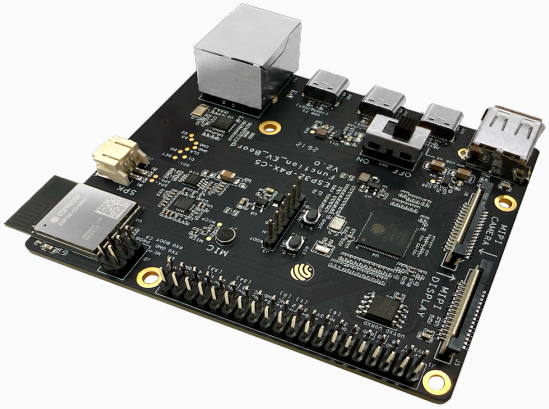	
ESP32-P4X-C5-Function-EV-Board	

Chapter 5

Related Documentation and Resources

5.1 Developer Zone

- ESP-IDF Programming Guide for ESP32-P4 –Extensive documentation for the ESP-IDF development framework.
- ESP-IoT-Solution Programming Guide - Extensive documentation for the ESP-IoT-Solution development framework.
- ESP-FAQ - A summary document of frequently asked questions released by Espressif.
- ESP-IDF and other development frameworks on GitHub.
  https://github.com/espressif
- ESP32 BBS Forum –Engineer-to-Engineer (E2E) Community for Espressif products where you can post questions, share knowledge, explore ideas, and help solve problems with fellow engineers.
  https://esp32.com/
- The ESP Journal –Best Practices, Articles, and Notes from Espressif folks.
  https://blog.espressif.com/
- See the tabs SDKs and Demos, Apps, Tools, AT Firmware.
  https://espressif.com/en/support/download/sdks-demos

5.2 Products

- ESP32-P4 Series SoCs –Browse through all ESP32-P4 SoCs.
  https://espressif.com/en/products/socs?id=ESP32-P4
- ESP32-P4 Series Modules –Browse through all ESP32-P4-based modules.
  https://espressif.com/en/products/modules?id=ESP32-P4
- ESP32-P4 Series DevKits –Browse through all ESP32-P4-based devkits.
  https://espressif.com/en/products/devkits?id=ESP32-P4
- ESP Product Selector –Find an Espressif hardware product suitable for your needs by comparing or applying filters.
  https://products.espressif.com/#/product-selector

5.3 Contact Us

- See the tabs Sales Questions, Technical Enquiries, Circuit Schematic & PCB Design Review, Get Samples (Online stores), Become Our Supplier, Comments & Suggestions.
  https://espressif.com/en/contact-us/sales-questions

Chapter 6

Disclaimer and Copyright Notice

Information in this document, including URL references, is subject to change without notice.

All third party's information in this document is provided as is with no warranties to its authenticity and accuracy.

No warranty is provided to this document for its merchantability, non-infringement, fitness for any particular purpose, nor does any warranty otherwise arising out of any proposal, specification or sample.

All liability, including liability for infringement of any proprietary rights, relating to use of information in this document is disclaimed. No licenses express or implied, by estoppel or otherwise, to any intellectual property rights are granted herein.

The Wi-Fi Alliance Member logo is a trademark of the Wi-Fi Alliance. The Bluetooth logo is a registered trademark of Bluetooth SIG.

All trade names, trademarks and registered trademarks mentioned in this document are property of their respective owners, and are hereby acknowledged.

6.1 Terms of Use for Development Board

The development board is intended for R&D evaluation, engineering design verification, and early-stage product development. It is provided as a convenient platform for development and testing. The development board is not intended as a mass-production component or as a finished product for end consumers; therefore, its product management approach differs from that of mass-produced chips and modules.

The development board has not obtained specific national or industry certifications and is not covered under regulatory frameworks such as CE, UL, or CCC. As a result, it may not meet the requirements of such regulations. Users should ensure that their use of the development board complies with the applicable laws and regulations of the country or region in which it is used. In addition, the development board has not been designed, validated, or managed for reliability testing, production, or commercial deployment purposes.

Users assume full responsibility for the correct and safe use of the product. For applications beyond the intended use of the development board, including but not limited to pre-production testing, system integration, final product delivery, or other commercial uses, the user should, before mass production and in light of its own product requirements, fully evaluate the technical suitability, reliability requirements, regulatory compliance, and system integration risks associated with such applications. The user should also complete all necessary verification, testing, and certification activities relating to system-level design, product certification, reliability validation, regulatory compliance assessment, and commercial deployment. Espressif assumes no liability arising from applications beyond the intended use of the development board. Regardless of whether the parties have entered into a supplier framework agreement, quality agreement, or any other similar agreement, the development board is not subject to any requirements or commitments therein relating to product certification, reliability management, return material analysis (RMA), product/process change notification (PCN), end-of-life (EOL) management, long-term supply commitments, or any other requirements and commitments established under a mass-production product management model.