PSOC™ 62 MCU

General description

PSOC™ 6 MCU is a high-performance, ultra-low-power and secured MCU platform, purpose-built for IoT applications. The CY8C62x8/A product line, based on the PSOC™ 6 MCU platform, is a combination of a dual CPU microcontroller with low-power flash technology, digital programmable logic, high-performance analog-to-digital conversion and standard communication and timing peripherals.

Features

- 32-bit dual CPU subsystem
  - 150-MHz Arm® Cortex®-M4F (CM4) CPU with single-cycle multiply, floating point, and memory protection unit (MPU)
  - 100-MHz Cortex®-M0+ (CM0+) CPU with single-cycle multiply and MPU
  - User-selectable core logic operation at either 1.1 V or 0.9 V
  - Active CPU current slope with 1.1-V core operation
    - Cortex®-M4: 40 µA/MHz
    - Cortex®-M0+: 28 µA/MHz
  - Active CPU current slope with 0.9-V core operation
    - Cortex®-M4: 27 µA/MHz
    - Cortex®-M0+: 20 µA/MHz
  - Three DMA controllers
- Memory subsystem
  - 2048-KB application flash, 32-KB auxiliary flash (AUXflash), and 32-KB supervisory flash (SFlash); read-while- write (RWW) support. Two 8-KB flash caches, one for each CPU
  - 1024-KB SRAM with three independent blocks for power and data retention control
  - One-time-programmable (OTP) 1-Kb eFuse array
- Low-power 1.7-V to 3.6-V operation
  - Six power modes for fine-grained power management
  - Deep Sleep mode current of 7 µA with 64-KB SRAM retention
  - On-chip DC-DC buck converter, < 1 µA quiescent current
  - Backup domain with 64 bytes of memory and real-time clock
- Flexible clocking options
  - 8-MHz internal main oscillator (IMO) with ±2% accuracy
  - Ultra-low-power 32-kHz internal low-speed oscillator (ILO)
  - On-chip crystal oscillators (16 MHz to 35 MHz, and 32 kHz)
  - Two phase-locked loops (PLLs) for multiplying clock frequencies
  - Frequency-locked loop (FLL) for multiplying IMO frequency
  - Integer and fractional peripheral clock dividers
- Quad-SPI (QSPI)/Serial Memory Interface (SMIF)
  - Execute-In-Place (XIP) from external quad SPI flash
  - On-the-fly encryption and decryption
  - 4-KB cache for greater XIP performance with lower power
  - Supports single, dual, quad, dual-quad, and octal interfaces with throughput up to 640 Mbps
- Segment LCD drive
  - Supports up to 101 segments and up to 8 commons

Features

- Serial communication
  - 13 run-time configurable serial communication blocks (SCBs)
    - Eight SCBs: configurable as SPI, I^2C, or UART
    - Four SCBs: configurable as I^2C or UART
    - One Deep Sleep SCB: configurable as SPI or I^2C
  - USB Full-Speed device/host interface
  - Two independent SD Host Controller/eMMC/SD controllers
- Audio subsystem
  - Two pulse density modulation (PDM) channels and two I^2S channels with time division multiplexed (TDM) mode
- Timing and pulse-width modulation
  - Thirty-two timer/counter/pulse-width modulators (TCPWMs)
  - Center-aligned, edge, and pseudo-random modes
  - Comparator-based triggering of kill signals
- Programmable analog
  - 12-bit 2-Msps SAR ADC with differential and single-ended modes and 16-channel sequencer with result aver- aging
  - Two low-power comparators available in system Deep Sleep and Hibernate modes
  - Built-in temperature sensor connected to ADC
- Up to 102 programmable GPIOs
  - Two Smart I/O ports (16 I/Os) enable Boolean operations on GPIO pins; available during system Deep Sleep
  - Programmable drive modes, strengths, and slew rates
  - Six overvoltage-tolerant (OVT) pins
- Capacitive sensing
  - Infineon CAPSENSE™ sigma-delta (CSD) provides best-in-class signal-to-noise ratio (SNR), liquid tolerance, and proximity sensing
  - Enables dynamic usage of both self and mutual sensing
  - Automatic hardware tuning (SmartSense™)
- Security built into platform architecture
  - ROM-based root of trust via uninterruptible Secured Boot
  - Authentication during boot using hardware hashing
  - Step-wise authentication of execution images
  - Secured execution of code in execute-only mode for protected routines
  - All debug and test ingress paths can be disabled
  - Up to eight protection contexts
- Cryptography accelerator
  - Hardware acceleration for symmetric and asymmetric cryptographic methods and hash functions
  - True random number generator (TRNG) function
- Profiler
  - Eight counters provide event or duration monitoring of on-chip resources
- Packages
  - 124-ball BGA, 128-pin TQFP, 68-pin QFN, and 100-ball WLCSP
- Device Identification and Revisions
  - Product Line ID (12-bit): 0x102
  - Major/Minor Die Revision ID: 1/2
  - Firmware Revisions: Rom Boot: 7.1, Flash Boot: 3.1.0.378 (see Boot code section)

Features

This product line has a JTAG ID which is available through the SWJ interface. It is a 32-bit ID, where:

- The most significant digit is the device revision, based on the Major Die Revision
- The next four digits correspond to the part number, for example “E4B0” as a hexadecimal number
- The three least significant digits are the manufacturer ID, in this case “069” as a hexadecimal number

The Silicon ID system call can be used by firmware to get Silicon ID and ROM Boot data. For more information, see the reference manuals.

The Flash Boot version can be read directly from designated addresses 0x1600 2004 and 0x1600 2018. For more information, see the reference manuals.

Table of contents

General description . . . 1
Features . . . 1
Table of contents . . . 4
1 Development ecosystem . . . 7
1.1 PSOC™ 6 MCU resources . . . 7
1.2 ModusToolbox™ software . . . 7
2 Blocks and functionality . . . 9
3 Functional description . . . 12
3.1 CPU and memory subsystem . . . 12
3.1.1 CPUs . . . 12
3.1.2 Interrupts . . . 13
3.1.3 InterProcessor communication (IPC) . . . 13
3.1.4 Direct memory access (DMA) controllers . . . 14
3.1.5 Cryptography accelerator (Crypto) . . . 14
3.1.6 Protection units . . . 15
3.1.7 Memory . . . 15
3.1.8 Boot code . . . 16
3.1.9 Memory map . . . 16
3.2 System resources . . . 17
3.2.1 Power system . . . 17
3.2.2 Power modes . . . 18
3.2.3 Clock system . . . 18
3.2.4 Internal main oscillator (IMO) . . . 18
3.2.5 Internal low-speed oscillator (ILO) . . . 18
3.2.6 External crystal oscillators . . . 19
3.2.7 Watchdog timers (WDT, MCWDT) . . . 20
3.2.8 Clock dividers . . . 20
3.2.9 Trigger routing . . . 20
3.2.10 Reset . . . 20
3.3 Programmable analog subsystems . . . 21
3.3.1 12-bit SAR ADC . . . 21
3.3.2 Temperature sensor . . . 22
3.3.3 Low-power comparators . . . 22
3.4 Programmable digital . . . 23
3.4.1 Smart I/O . . . 23
3.5 Fixed-function digital . . . 24
3.5.1 Timer/Counter/Pulse-width Modulator (TCPWM) . . . 24
3.5.2 Serial communication blocks (SCB) . . . 25

Table of contents

3.5.3 USB Full-Speed device/host Interface . . . 25
3.5.4 Quad-SPI/Serial memory interface (SMIF) . . . 25
3.5.5 LCD . . . 25
3.5.6 SD host controllers . . . 26
3.6 GPIO . . . 26
3.7 Special-function peripherals . . . 27
3.7.1 Audio subsystem . . . 27
3.7.2 CAPSENSE™ subsystem . . . 28

4 Pinouts . . . 32

5 Power supply considerations . . . 58

6 Electrical specifications . . . 68
6.1 Absolute maximum ratings . . . 68
6.2 Device-level specifications . . . 68
6.2.1 Power supplies . . . 69
6.2.2 CPU current and transition times . . . 71
6.2.3 XRES . . . 78
6.2.4 GPIO . . . 79
6.3 Analog peripherals . . . 80
6.3.1 Low-power (LP) comparator . . . 80
6.3.2 Temperature sensor . . . 82
6.3.3 Internal reference . . . 82
6.3.4 SAR ADC . . . 82
6.3.5 CSD . . . 83
6.4 Digital Peripherals . . . 91
6.4.1 Timer/Counter/PWM . . . 91
6.4.2 Serial communication block (SCB) . . . 93
6.4.3 LCD specifications . . . 94
6.5 Memory . . . 95
6.6 System resources . . . 96
6.6.1 SWD interface . . . 97
6.6.2 Internal main oscillator . . . 97
6.6.3 Internal low-speed oscillator . . . 98
6.6.4 Crystal oscillator specifications . . . 98
6.6.5 External clock specifications . . . 99
6.6.6 PLL specifications . . . 99
6.6.7 FLL specifications . . . 99
6.6.8 USB . . . 100
6.6.9 QSPI . . . 101
6.6.10 Audio subsystem . . . 102
6.6.11 Smart I/O . . . 106
6.6.12 SD Host controller and eMMC . . . 106

Table of contents

6.6.13 JTAG boundary scan 113

7 Ordering information 115

7.1 PSOC™ 6 MPN decoder 116

8 Packaging 118

9 Acronyms 123

10 Document conventions 128

10.1 Units of measure 128

Revision history 130

Trademarks 133

Disclaimer 134

1 Development ecosystem

1.1 PSOC™ 6 MCU resources

Infineon provides a wealth of data at www.infineon.com to help you select the right PSOC™ device and quickly and effectively integrate it into your design. The following is an abbreviated list of resources for PSOC™ 6 MCU:

- **Overview**: PSOC™ portfolio
- **Product selectors**: PSOC™ 6 MCU
- Application notes cover a broad range of topics, from basic to advanced level, and include the following:
  - AN221774: Getting started with PSOC™ 6 MCU on PSOC™ Creator
  - AN218241: PSOC™ 6 MCU hardware design considerations
  - AN213924: PSOC™ 6 MCU Device Firmware Update (DFU) software development kit guide
  - AN215656: PSOC™ 6 MCU dual-core system design
  - AN219528: PSOC™ 6 MCU low-power modes and power reduction techniques
  - AN221111: PSOC™ 6 MCU designing a custom secured system
  - AN85951: PSOC™ 4 and PSOC™ 6 MCU CAPSENSE™ design guide
- Code examples demonstrate product features and usage, and are also available on Infineon GitHub repositories
- Reference manuals provide detailed descriptions of PSOC™ 6 MCU architecture and registers
- PSOC™ 6 MCU programming specification provides the information necessary to program PSOC™ 6 MCU nonvolatile memory
- **Development tools**
  - ModusToolbox™ software enables cross platform code development with a robust suite of tools and software libraries
  - CY8CPROTO-062-4343W PSOC™ 6 Wi-Fi BT Prototyping Kit: a low-cost hardware platform that enables design and debug of the PSOC™ 62 CY8C62x8/A product line. It comes with a CY8CMOD-062-4343W module, industry-leading CAPSENSE™ touch buttons and slider, on-board debugger/programmer, microSD card interface, 512-Mb Quad-SPI NOR flash, PDM microphone, and a thermistor. It also includes a Murata LBEE5KL1DX module, based on the CYW4343W combo device
  - CY8CKIT-062S2-43012 PSOC™ 62S2 Wi-Fi BT Pioneer Kit: a low-cost hardware platform that enables design and debug of the PSOC™ 62 MCU and the Murata 1LV Module, based on the CYW43012 Wi-Fi + Bluetooth® combo device
  - PSOC™ 6 CAD libraries provide footprint and schematic support for common tools. BSDL files and IBIS models are also available
- Training videos are available on a wide range of topics including the PSOC™ 6 MCU 101 series
- Infineon Developer Community enables connection with fellow PSOC™ developers around the world, 24 hours a day, 7 days a week, and hosts a dedicated PSOC™ 6 MCU Community

1.2 ModusToolbox™ software

ModusToolbox™ software is Infineon's comprehensive collection of multi-platform tools and software libraries that enable an immersive development experience for creating converged MCU and wireless systems. It is:

- Comprehensive - it has the resources you need
- Flexible - you can use the resources in your own workflow
- Atomic - you can get just the resources you want

1 Development ecosystem

Infineon provides a large collection of code repositories on GitHub. This includes:

- Board Support Packages (BSPs) aligned with Infineon kits
- Low-level resources, including a hardware abstraction layer (HAL) and peripheral driver library (PDL)
- Middleware enabling industry-leading features such as CAPSENSE™, Bluetooth® Low Energy, and mesh networks
- An extensive set of thoroughly tested code example applications

***Note**: The HAL provides a high-level, simplified interface to configure and use the hardware blocks on Infineon MCUs. It is a generic interface that can be used across multiple product families. For example, it wraps the PSOC™ 6 PDL with a simplified API, but the PDL exposes all low-level peripheral functionality. You can leverage the HAL's simpler and more generic interface for most of an application, even if one portion requires finer-grained control.*

ModusToolbox™ software is IDE-neutral and easily adaptable to your workflow and preferred development environment. It includes a project creator, peripheral and library configurators, a library manager, as well as the optional Eclipse IDE for ModusToolbox™. For information on using Infineon tools, refer to the documentation delivered with ModusToolbox™ software, and AN228571: Getting started with PSOC™ 6 MCU on ModusToolbox™ software.

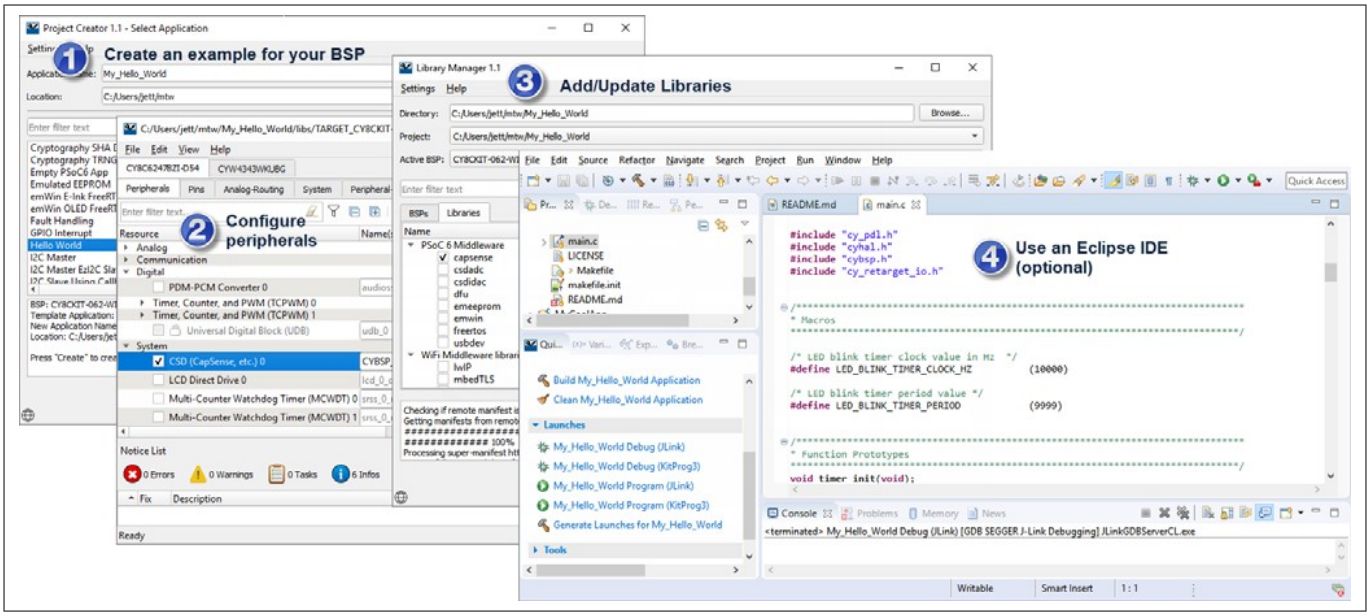

Figure 1 ModusToolbox™ software tools

2 Blocks and functionality

Figure 2 shows the major subsystems and a simplified view of their interconnections. The color coding shows the lowest power mode where the particular block is still functional (for example, the SRAM is functional down to system Deep Sleep mode).

2 Blocks and functionality

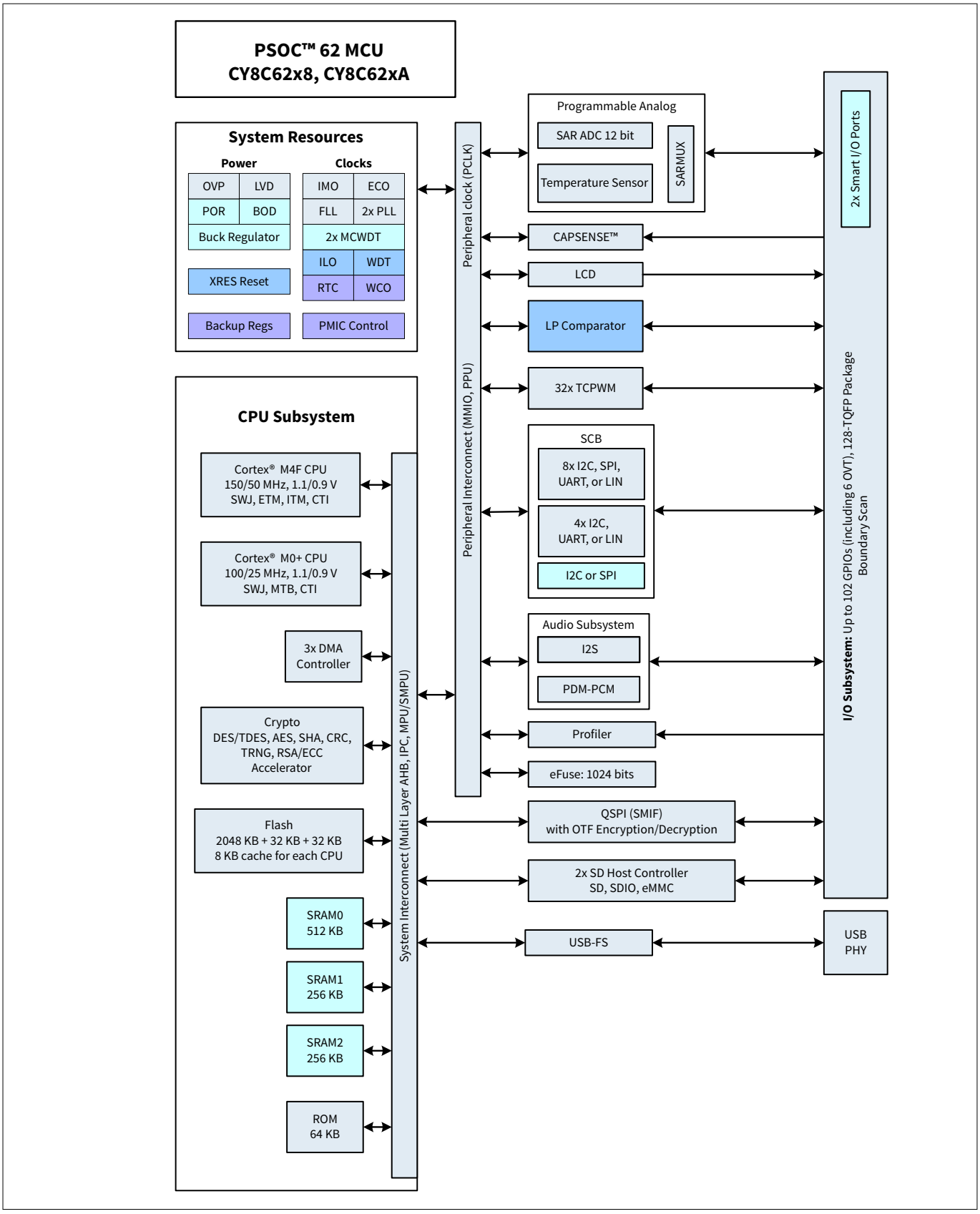

Figure 2 Block diagram

There are three debug access ports, one each for CM4 and CM0+, and a system port.

2 Blocks and functionality

PSOC™ 6 MCU devices include extensive support for programming, testing, debugging, and tracing both hardware and firmware. All device interfaces can be permanently disabled for applications concerned about a reprogrammed device or starting and interrupting flash programming sequences. All programming, debug, and test interfaces can be disabled.

Complete debug-on-chip functionality enables full device debugging in the final system using the standard production device. It does not require special interfaces, debugging pods, simulators, or emulators. Only the standard programming connections are required to fully support debug.

The Eclipse IDE for ModusToolbox™ provides fully integrated programming and debug support for these devices. The SWJ (SWD and JTAG) interface is fully compatible with industry-standard third party probes. With the ability to disable debug features, with very robust flash protection, and by allowing customer-proprietary functionality to be implemented in on-chip programmable blocks, PSOC™ 6 provides multiple levels of device security.

3 Functional description

The following sections provide an overview of the features, capabilities and operation of each functional block identified in the block diagram in Figure 2. For more detailed information, refer to the following documentation:

- Board support package (BSP) documentation

  BSPs are available on GitHub. They are aligned with Infineon kits and provide files for basic device functionality such as hardware configuration files, startup code, and linker files. The BSP also includes other libraries that are required to support a kit. Each BSP has its own documentation, but typically includes an API reference such as the example here. This search link finds all currently available BSPs on the Infineon GitHub site
- Hardware Abstraction Layer API reference manual

  The Infineon Hardware Abstraction Layer (HAL) provides a high-level interface to configure and use hardware blocks on Infineon MCUs. It is a generic interface that can be used across multiple product families. You can leverage the HAL's simpler and more generic interface for most of an application, even if one portion requires finer-grained control. The HAL API Reference provides complete details. Example applications that use the HAL download it automatically from the GitHub repository
- Peripheral Driver Library (PDL) Application Programming Interface (API) Reference Manual

  The Peripheral Driver Library (PDL) integrates device header files and peripheral drivers into a single package and supports all PSOC™ 6 MCU product lines. The drivers abstract the hardware functions into a set of easy-to- use APIs. These are fully documented in the PDL API Reference. Example applications that use the PSOC™ 6

  PDL download it automatically from the GitHub repository
- Architecture reference manual

  The architecture reference manual provides a detailed description of each resource in the device. This is the next reference to use if it is necessary to understand the operation of the hardware below the software provided by PDL. It describes the architecture and functionality of each resource and explains the operation of each resource in all modes. It provides specific guidance regarding the use of associated registers
- Register reference manual

  The register reference manual provides a complete list of all registers in the device. It includes the breakdown of all register fields, their possible settings, read/write accessibility, and default states. All registers that have a reasonable use in typical applications have functions to access them from within PDL. Note that ModusToolbox™ software and PDL may provide software default conditions for some registers that are different from and override the hardware defaults

3.1 CPU and memory subsystem

PSOC™ 6 has multiple bus masters, as Figure 2 shows. They are: CPUs, DMA controllers, QSPI, USB, SD Host Controllers, and a Crypto block. Generally, all memory and peripherals can be accessed and shared by all bus masters through multi-layer Arm® AMBA high-performance bus (AHB) arbitration. Accesses between CPUs can be synchronized using an inter-processor communication (IPC) block.

3.1.1 CPUs

There are two Arm® Cortex® CPUs:

The Cortex®-M4 (CM4) has single-cycle multiply, a floating-point unit (FPU), and a memory protection unit (MPU). It can run at up to 150 MHz. This is the main CPU, designed for a short interrupt response time, high code density, and high throughput.

CM4 implements a version of the Thumb instruction set based on Thumb-2 technology (defined in the ARMv7-M Architecture Reference Manual).

The Cortex®-M0+ (CM0+) has single-cycle multiply, and an MPU. It can run at up to 100 MHz; however, for CM4 speeds above 100 MHz, CM0+ and bus peripherals are limited to half the speed of CM4. Thus, for CM4 running at 150 MHz, CM0+ and peripherals are limited to 75 MHz.

CM0+ is the secondary CPU; it is used to implement system calls and device-level safety and protection features. CM0+ provides a secured, uninterruptible boot function. This helps ensure that post boot, system integrity is checked and memory and peripheral access privileges are enforced.

CM0+ implements the Armv6-M Thumb instruction set (defined in the ARMv6-M Architecture Reference Manual

The CPUs have the following power draw, at V_{DDD} = 3.3 V and using the internal buck regulator:

Table 1 Active current slope at V_{DDD} = 3.3 V using the internal buck regulator

		System power mode	
		ULP	**LP**
CPU	Cortex®-M0+	20 µA/MHz	28 µA/MHz
	Cortex®-M4	27 µA/MHz	40 µA/MHz

The CPUs can be selectively placed in their Sleep and Deep Sleep power modes as defined by Arm®.

Both CPUs have nested vectored interrupt controllers (NVIC) for rapid and deterministic interrupt response, and wakeup interrupt controllers (WIC) for CPU wakeup from Deep Sleep power mode.

The CPUs have extensive debug support. PSOC™ 6 has a debug access port (DAP) that acts as the interface for device programming and debug. An external programmer or debugger (the “host”) communicates with the DAP through the device serial wire debug (SWD) or Joint Test Action Group (JTAG) interface pins. Through the DAP (and subject to restrictions), the host can access the device memory and peripherals as well as the registers in both CPUs.

Each CPU offers debug and trace features as follows:

- CM4 supports six hardware breakpoints and four watchpoints, 4-bit embedded trace macrocell (ETM), serial wire viewer (SWV), and printf()-style debugging through the single wire output (SWO) pin
- CM0+ supports four hardware breakpoints and two watchpoints, and a micro trace buffer (MTB) with 4-KB dedicated RAM

PSOC™ 6 also has an Embedded Cross Trigger for synchronized debugging and tracing of both CPUs.

3.1.2 Interrupts

This product line has 168 system and peripheral interrupt sources, and supports interrupts and system exceptions on both CPUs. CM4 has 168 interrupt request lines (IRQ), with the interrupt source ‘n’ directly connected to IRQn. CM0+ has eight interrupts IRQ[7:0] with configurable mapping of one or more interrupt sources to any of the IRQ[7:0]. CM0+ also supports eight internal (software only) interrupts.

Each interrupt supports configurable priority levels (eight levels for CM4 and four levels for CM0+). Up to four system interrupts can be mapped to each of the CPUs’ non-maskable interrupts (NMI). Up to 39 interrupt sources are capable of waking the device from Deep Sleep power mode using the WIC. Refer to the reference manual for details.

3.1.3 InterProcessor communication (IPC)

In addition to the Arm® SEV and WFE instructions, a hardware InterProcessor communication (IPC) block is included. It includes 16 IPC channels and 16 IPC interrupt structures. The IPC channels can be used to implement data communication between the processors. Each IPC channel also implements a locking scheme

which can be used to manage shared resources. The IPC interrupts let one processor interrupt the other, signaling an event. This is used to trigger events such as notify and release of the corresponding IPC channels. Some IPC channels and other resources are reserved, as Table 2 shows:

Table 2 Distribution of IPC channels and other resources

Resources available	Resources consumed
IPC channels, 16 available	8 reserved
IPC interrupts, 16 available	8 reserved
Other interrupts	1 reserved
CM0+NMI	Reserved
Other resources: clock dividers, DMA channels, etc.	1 CM0+ interrupt mux

3.1.4 Direct memory access (DMA) controllers

This product line has three DMA controllers, which support CPU-independent accesses to memory and peripherals. Two of them have 29 channels each and the third has 4 channels. The descriptors for DMA channels can be in SRAM or flash. Therefore, the number of descriptors is limited only by the size of the memory. Each descriptor can transfer data in two nested loops with configurable address increments to the source and destination. The size of data transfer per descriptor varies based on the type of DMA channel. Refer to the reference manual for details.

3.1.5 Cryptography accelerator (Crypto)

This subsystem consists of hardware implementation and acceleration of cryptographic functions and random number generators.

The Crypto subsystem supports the following:

- Encryption/Decryption functions
  - Data Encryption Standard (DES)
  - Triple DES (3DES)
  - Advanced Encryption Standard (AES) (128-, 192-, 256-bit)
  - Elliptic Curve Cryptography (ECC)
  - RSA cryptography functions
- Hashing functions
  - Secure Hash Algorithm (SHA)

  - SHA-1
  - SHA-224/-256/-384/-512
- Message authentication functions (MAC)
  - Hashed message authentication code (HMAC)
  - Cipher-based message authentication code (CMAC)
- 32-bit cyclic redundancy code (CRC) generator
- Random number generators
  - Pseudo random number generator (PRNG)
  - True random number generator (TRNG)

3.1.6 Protection units

This product line has multiple types of protection units to control erroneous or unauthorized access to memory and peripheral registers. CM4 and CM0+ have Arm® MPUs for protection at the bus master level. Other bus masters use additional MPUs. Shared memory protection units (SMPUs) help implement protection for memory resources that are shared among multiple bus masters. Peripheral protection units (PPU) are similar to SMPUs but are designed for protecting the peripheral register space.

Protection units support memory and peripheral access attributes including address range, read/write, code/data, privilege level, secured/non-secured, and protection context. Some protection unit resources are reserved for system usage; see the reference manual for details.

3.1.7 Memory

PSOC™ 6 contains flash, SRAM, ROM, and eFuse memory blocks.

- Flash

There is up to 2 MB of application flash, organized in 256 KB sectors.

There are also two 32-KB flash sectors:

- Auxiliary flash (AUXflash), typically used for EEPROM emulation
- Supervisory flash (Sflash). Data stored in Sflash includes device trim values, Flash Boot code, and encryption keys. After the device transitions into the “Secure” lifecycle stage, Sflash can no longer be changed

The flash has 128-bit-wide accesses to reduce power. Write operations can be performed at the row level. A row is 512 bytes. Read operations are supported in both Low Power and Ultra-Low Power modes, however write operations may not be performed in Ultra-Low Power mode.

The flash controller has two caches, one for each CPU. Each cache is 8 KB, with 4-way set associativity.

- SRAM

Up to 1 MB of SRAM is provided in three banks of 512 KB, 256 KB, and 256 KB. Each SRAM bank provides control over power modes to manage power consumption. For Bank 0 (512 KB), power control and retention granularity are configurable in sixteen 32-KB regions. For banks 1 and 2 (256 KB each) power control is on a per bank basis. For normal operation, the banks can be enabled or disabled to save power. For Deep Sleep mode, the banks can also be configured to retain data.

- ROM

The 64-KB ROM, also referred to as the supervisory ROM (SROM), provides code (ROM Boot) for several system functions. The ROM contains device initialization, flash write, security, eFuse programming, and other system-level routines. ROM code is executed only by the CM0+ CPU, in protection context 0. A system function can be initiated by either CPU, or through the DAP. This causes an NMI in CM0+, which causes CM0+ to execute the system function.

- eFuse

A one-time-programmable (OTP) eFuse array consists of 1024 bits, of which 648 are reserved for system use such as die ID, device ID, initial trim settings, device life cycle, and security settings. The remaining bits are available for storing key information, hash values, unique IDs or similar custom content.

Each fuse is individually programmed; once programmed (or “blown”), its state cannot be changed. Blowing a fuse transitions it from the default state of 0 to 1. To program an eFuse, V_{DDIO0} must be at 2.5 V ± 5%, at 14 mA.

Because blowing an eFuse is an irreversible process, programming is recommended only in mass production under controlled factory conditions. For more information, see PSOC™ 6 MCU Programming Specifications.

3.1.8 Boot code

Two blocks of code, ROM Boot and Flash Boot, are pre-programmed into the device and work together to provide device startup and configuration, basic security features, lifecycle stage management and other system functions.

- ROM Boot

  On a device reset, the boot code in ROM is the first code to execute. This code performs the following:

  - Integrity checks of flash boot code
  - Device trim setting (calibration)
  - Setting the device protection units
  - Setting device access restrictions for “Secure” lifecycle states

  ROM cannot be changed and acts as the root of trust in a secured system.
- Flash Boot

  Flash boot is firmware stored in SFlash that ensures that only a validated application may run on the device. It also ensures that the firmware image has not been modified, such as by a malicious third party.

  Flash boot:

  - Is validated by ROM Boot
  - Runs after ROM Boot and before the user application
  - Enables system calls
  - Configures the Debug Access Port
  - Launches the user application

  If the user application cannot be validated, then flash boot ensures that the device is transitioned into a safe state.

3.1.9 Memory map

Both CPUs have a fixed address map, with shared access to memory and peripherals. The 32-bit (4 GB) address space is divided into the Arm®-defined regions shown in Table 3. Note that code can be executed from the Code and External RAM regions.

Table 3 Address map for CM4 and CM0+

Address range	Name	Use
0x0000 0000–0x1FFF FFFF	Code	Program code region. Data can also be placed here. It includes the exception vector table, which starts at address 0.
0x2000 0000–0x3FFF FFFF	SRAM	Data region. This region is not supported in PSOC™ 6.

(table continues...)

Table 3 (continued) Address map for CM4 and CM0+

Address range	Name	Use
0x4000 0000–0x5FFF FFFF	Peripheral	All peripheral registers. Code cannot be executed from this region. CM4 bit-band in this region is not supported in PSOC™ 6.
0x6000 0000–0x9FFF FFFF	External RAM	SMIF or Quad SPI, (see the Quad-SPI/Serial memory interface (SMIF) section). Code can be executed from this region.
0xA000 0000–0xDFFF FFFF	External Device	Not used.
0xE000 0000–0xE00F FFFF	Private Peripheral Bus	Provides access to peripheral registers within the CPU core.
0xE010 0A000–0xFFFF FFFF	Device	Device-specific system registers.

The device memory map shown in Table 4 applies to both CPUs. That is, the CPUs share access to all PSOC™ 6 MCU memory and peripheral registers.

Table 4 Internal memory address map for CM4 and CM0+

Address range	Memory type	Size
0x0000 0000 – 0x0000 FFFF	ROM	64 KB
0x0800 0000 – 0x080F FFFF	SRAM	Up to 1 MB
0x1000 0000 – 0x101F FFFF	Application flash	Up to 2 MB
0x1400 0000 – 0x1400 7FFF	Auxiliary flash, can be used for EEPROM emulation	32 KB
0x1600 0000 – 0x1600 7FFF	Supervisory flash	32 KB

Note that PSOC™ 6 SRAM is located in the Arm® Code region for both CPUs (see Table 3). There is no physical memory located in the CPUs' Arm® SRAM regions.

3.2 System resources

3.2.1 Power system

The power system provides assurance that voltage levels are as required for each respective mode and will either delay mode entry (on power-on reset (POR), for example) until voltage levels are as required for proper function or generate resets (brown-out detect (BOD)) when the power supply drops below specified levels. The design guarantees safe chip operation between power supply voltage dropping below specified levels (for example, below 1.7 V) and the reset occurring. There are no voltage sequencing requirements.

The V_{DDD} supply (1.7 V to 3.6 V) powers an on-chip buck regulator or a low-dropout regulator (LDO), selectable by the user. In addition, both the buck and the LDO offer a selectable (0.9 V or 1.1 V) core operating voltage (V_{CCD}). The selection lets users choose between two system power modes:

- System Low Power (LP) operates V_{CCD} at 1.1 V and offers high performance, with no restrictions on device configuration
- System Ultra Low Power (ULP) operates V_{CCD} at 0.9 V for exceptional low power, but imposes limitations on clock speeds

In addition, a backup domain adds an "always on" functionality using a separate power domain supplied by a backup supply (VBACKUP) such as a battery or supercapacitor. It includes a real-time clock (RTC) with alarm

feature, supported by a 32.768-kHz watch crystal oscillator (WCO), and power-management IC (PMIC) control. See the Power supply considerations for more details.

3.2.2 Power modes

PSOC™ 6 MCU can operate in four system and three CPU power modes. These modes are intended to minimize the average power consumption in an application. For more details on power modes and other power-saving configuration options, see the application note, AN219528: PSOC™ 6 MCU low-power modes and power reduction techniques and the Architecture reference manual, Power modes chapter.

Power modes supported by PSOC™ 6 MCUs, in order of decreasing power consumption, are:

- System Low Power (LP) – All peripherals and CPU power modes are available at maximum speed
- System Ultra Low Power (ULP) – All peripherals and CPU power modes are available, but with limited speed
- CPU Active – CPU is executing code in system LP or ULP mode
- CPU Sleep – CPU code execution is halted in system LP or ULP mode
- CPU Deep Sleep – CPU code execution is halted and system Deep Sleep is requested in system LP or ULP mode
- System Deep Sleep – Only low-frequency peripherals are available after both CPUs enter CPU Deep Sleep mode
- System Hibernate – Device and I/O states are frozen and the device resets on wakeup

CPU Active, Sleep, and Deep Sleep are standard Arm®-defined power modes supported by the Arm® CPU instruction set architecture (ISA). System LP, ULP, Deep Sleep and Hibernate modes are additional low-power modes supported by PSOC™ 6 MCU.

3.2.3 Clock system

Figure 3 shows that the clock system of this product line consists of the following:

- Internal main oscillator (IMO)
- Internal low-speed oscillator (ILO)
- Watch crystal oscillator (WCO)
- External MHz crystal oscillator (ECO)
- External clock input
- Two phase-locked loops (PLLs)
- One frequency-locked loop (FLL)

Clocks may be buffered and brought out to a pin on a smart I/O port.

The default clocking when the application starts is `CLK_HF[0]` being driven by the IMO and the FLL. `CLK_HF[0]`, `clk_fast`, `clk_peri`, and `clk_slow` are all either 50 MHz (LP mode) or 25 MHz (ULP mode). All other clocks, including all peripheral clocks, are off.

3.2.4 Internal main oscillator (IMO)

The IMO is the primary source of internal clocking. It is trimmed at the factory to achieve the specified accuracy. The IMO frequency is 8 MHz and tolerance is ±2%.

3.2.5 Internal low-speed oscillator (ILO)

The ILO is a very low power oscillator, nominally 32 kHz, which operates in all power modes. The ILO can be calibrated against a higher accuracy clock for better accuracy.

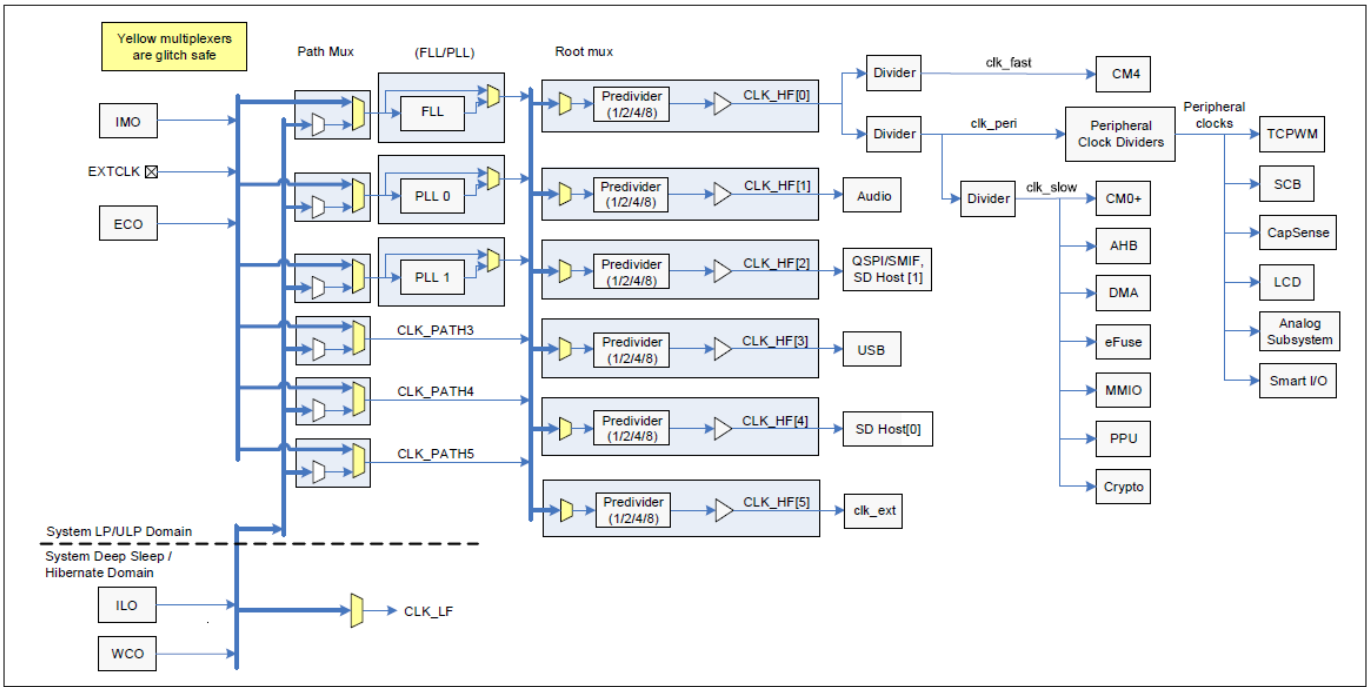

Figure 3 Clocking diagram

3.2.6 External crystal oscillators

Figure 4 shows all of the external crystal oscillator circuits for this product line. The component values shown are typical; check ECO specifications for the crystal values, and the crystal datasheet for the load capacitor values. The ECO and WCO require balanced external load capacitors. For more information, see the reference manuals and AN218241: PSOC™ 6 MCU hardware design considerations.

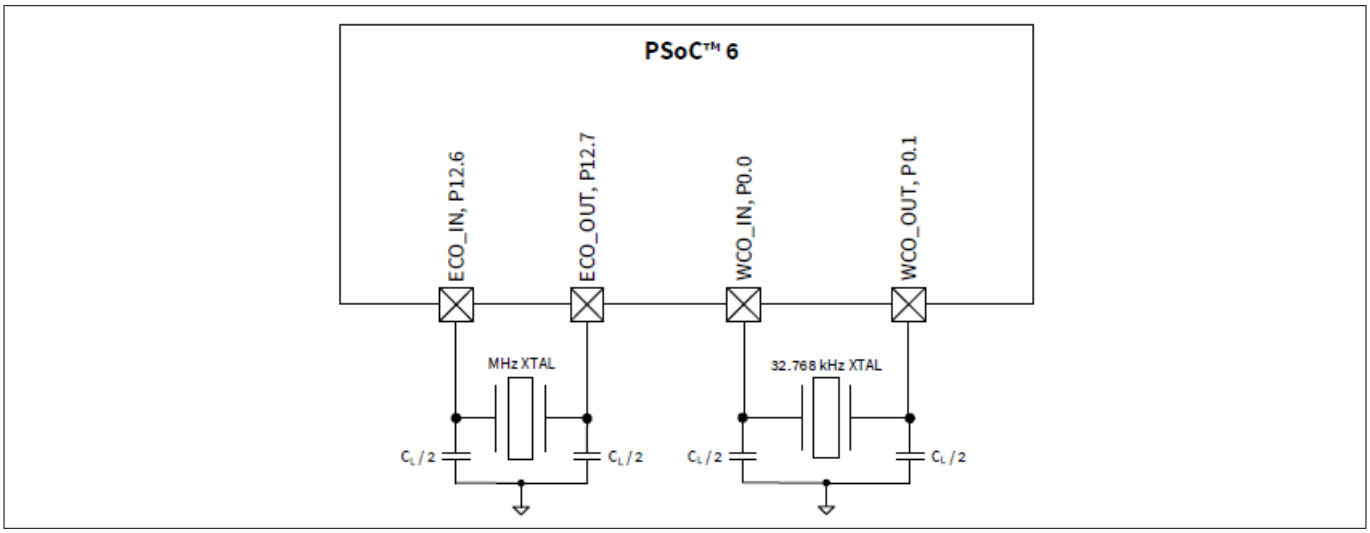

Figure 4 Oscillator circuits

If the ECO is used, note that its performance is affected by GPIO switching noise. GPIO ports should be used as Table 5 shows. See also Table 6 for additional restrictions for general analog subsystem use.

Table 5 ECO Usage Guidelines

Ports	Max frequency	Drive strength for $V_{DDD} \leq 2.7$ V	Drive strength for $V_{DDD} \leq 2.7$ V
Port 11	60 MHz for SMIF (QSPI)	DRIVE_SEL 2	DRIVE_SEL 3
Ports 12 and 13	Slow slew rate setting	No restrictions	No restrictions

3.2.7 Watchdog timers (WDT, MCWDT)

PSOC™ 6 MCU has one WDT and two multi-counter WDTs (MCWDT). The WDT has a 16-bit free-running counter. Each MCWDT has two 16-bit counters and one 32-bit counter, with multiple operating modes. All of the 16-bit counters can generate a watchdog device reset. All of the counters can generate an interrupt on a match event.

The WDT is clocked by the ILO. It can generate interrupt/wakeup in system LP/ULP, Deep Sleep, and Hibernate power modes. The MCWDTs are clocked by LFCLK (ILO or WCO). It can generate periodic interrupt / wakeup in system LP/ULP and Deep Sleep power modes.

3.2.8 Clock dividers

Integer and fractional clock dividers are provided for peripheral use and timing purposes. There are:

- Eight 8-bit clock dividers
- Sixteen 16-bit integer clock dividers
- Four 16.5-bit fractional clock dividers
- One 24.5-bit fractional clock divider

3.2.9 Trigger routing

PSOC™ 6 MCU contains a trigger multiplexer block. This is a collection of digital multiplexers and switches that are used for routing trigger signals between peripheral blocks and between GPIOs and peripheral blocks.

There are two types of trigger routing. Trigger multiplexers have reconfigurability in the source and destination. There are also hardwired switches called “one-to-one triggers”, which connect a specific source to a destination. The user can enable or disable the route.

3.2.10 Reset

PSOC™ 6 MCU can be reset from a variety of sources:

- Power-on reset (POR) to hold the device in reset while the power supply ramps up to the level required for the device to function properly. POR activates automatically at power-up.
- Brown-out detect (BOD) reset to monitor the digital voltage supply V_{DDD} and generate a reset if V_{DDD} falls below the minimum required logic operating voltage.
- External reset dedicated pin (XRES) to reset the device using an external source. The XRES pin is active low. It can be connected either to a pull-up resistor to V_{DDD}, or to an active drive circuit, as Figure 5 shows. If a pull-up resistor is used, select its value to minimize current draw when the pin is pulled low; 4.7 kΩ is typical.

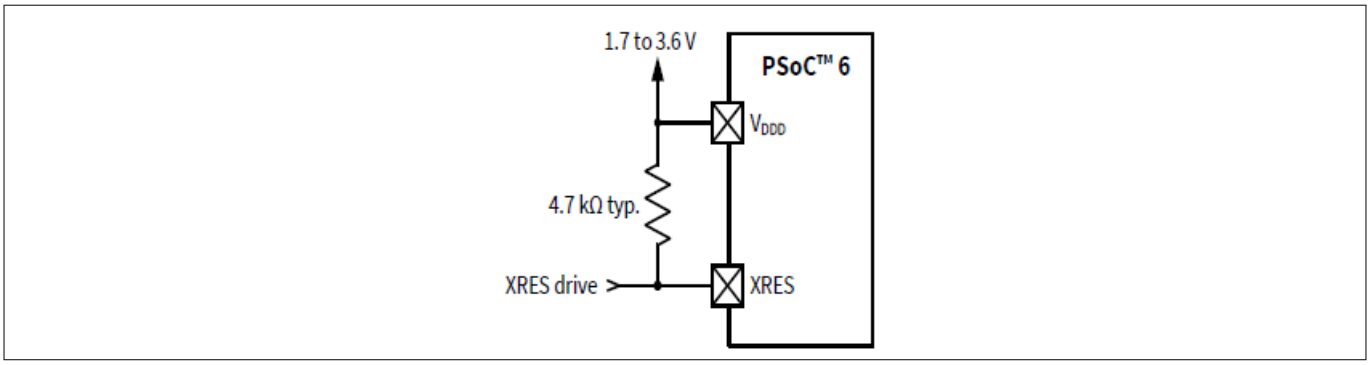

Figure 5 XRES connection diagram

- Watchdog timer (WDT or MCWDT) to reset the device if firmware fails to service it within a specified timeout period.
- Software-initiated reset to reset the device on demand using firmware.
- Logic-protection fault can trigger an interrupt or reset the device if unauthorized operating conditions occur; for example, reaching a debug breakpoint while executing privileged code.
- Hibernate wakeup reset to bring the device out of the system Hibernate power mode.

Reset events are asynchronous and guarantee reversion to a known state. Some of the reset sources are recorded in a register, which is retained through reset and allows software to determine the cause of the reset.

3.3 Programmable analog subsystems

3.3.1 12-bit SAR ADC

The 12-bit, 2-Msps SAR ADC can operate at a maximum clock rate of 36 MHz and requires a minimum of 18 clocks at that frequency to do a 12-bit conversion. One of three internal reference voltages may be used for an ADC reference voltage. The references are, V_{DD}, $V_{DD}/2$, and VREF (nominally 1.2 V and trimmed to ±1%). An external reference may also be used, by either driving the VREF pin or routing an external reference to GPIO pin P9.7. These reference options allow ratio-metric readings or absolute readings at the accuracy of the reference used. The input range of the ADC is the full supply voltage between V_{SS} and V_{DDA}/V_{DDIOA}. The SAR ADC may be configured with a mix of single-ended and differential signals in the same configuration.

The SAR ADC's sample-and-hold (S/H) aperture is programmable to allow sufficient time for signals with a high impedance to settle sufficiently, if required. System performance is 65 dB for true 12-bit precision provided appropriate references are used and system noise levels permit it. To improve performance in noisy conditions, an external bypass capacitor for the internal reference amplifier (through the fixed "VREF" pin), may be added.

The SAR is connected to a fixed set of pins through an input multiplexer. The multiplexer cycles through the selected channels autonomously (sequencer scan) and does so with zero switching overhead (that is, the aggregate sampling bandwidth is equal to 2 Msps whether it is for a single channel or distributed over several channels). The result of each channel is buffered, so that an interrupt may be triggered only when a full scan of all channels is complete. Also, a pair of range registers can be set to detect and cause an interrupt if an input exceeds a minimum and/or maximum value. This allows fast detection of out-of-range values without having to wait for a sequencer scan to be completed and the CPU to read the values and check for out-of-range values in software. The SAR can also be connected, under firmware control, to most other GPIO pins via the Analog Multiplexer Bus (AMUXBUS). The SAR is not available in system Deep Sleep and Hibernate modes as it requires a high-speed clock (up to 36 MHz). The SAR operating range is 1.71 V to 3.6 V.

3.3.2 Temperature sensor

An on-chip temperature sensor is part of the SAR and may be scanned by the SAR ADC. It consists of a diode, which is biased by a current source that can be disabled to save power. The temperature sensor may be connected directly to the SAR ADC as one of the measurement channels. The ADC digitizes the temperature sensor's output and a Infineon-supplied software function may be used to convert the reading to temperature which includes calibration and linearization.

3.3.3 Low-power comparators

Two low-power comparators are provided, which can operate in all power modes. This allows other analog system resources to be disabled while retaining the ability to monitor external voltage levels during system Deep Sleep and Hibernate modes. The comparator outputs are normally synchronized to avoid metastability unless operating in an asynchronous power mode (Hibernate) where the system wake-up circuit is activated by a comparator-switch event.

Figure 6 shows an overview of the analog subsystem. This diagram is a high-level abstraction. See the reference manual for detailed connectivity information.

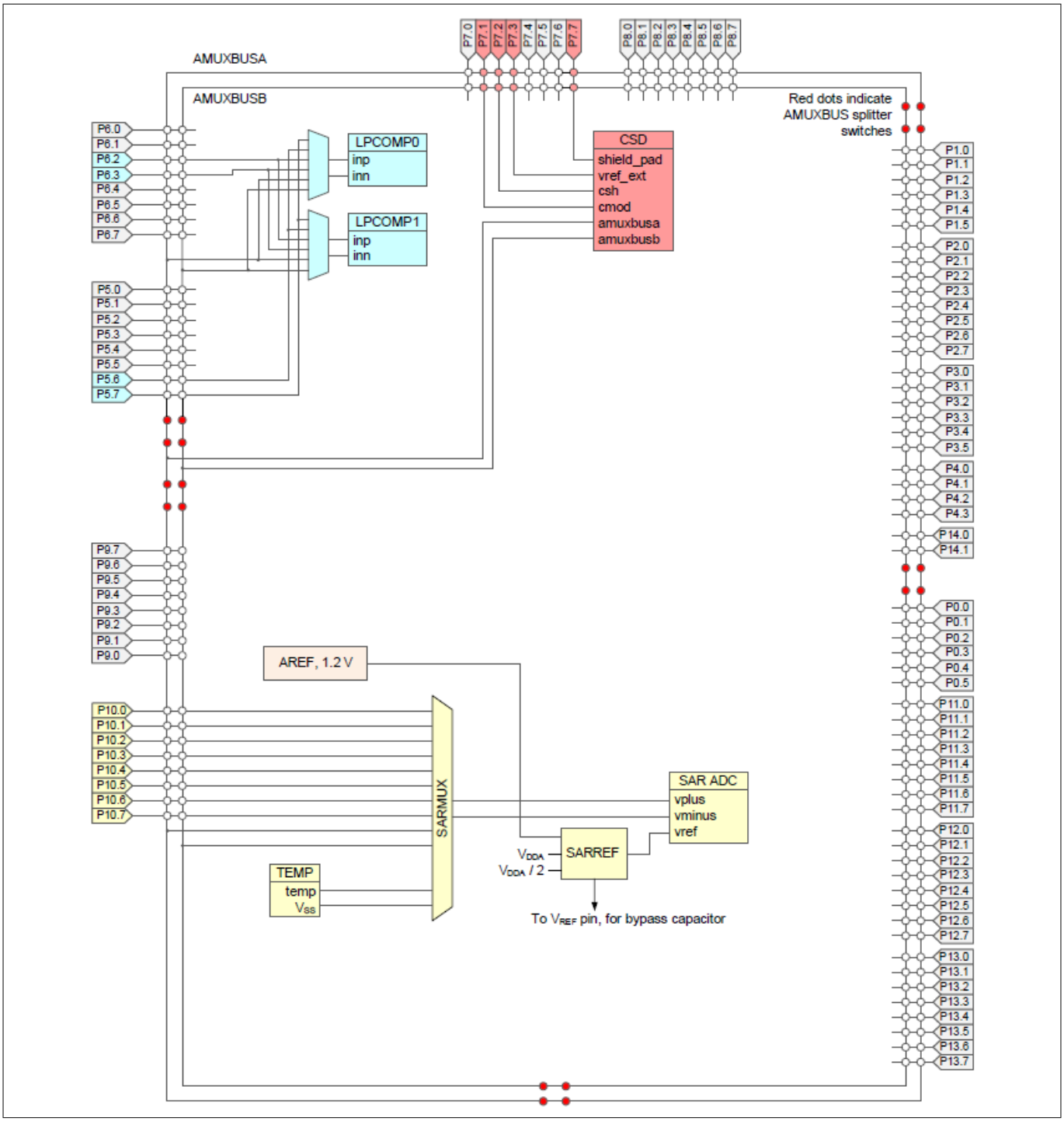

Figure 6 Analog subsystem

3.4 Programmable digital

3.4.1 Smart I/O

Smart I/O is a programmable logic fabric that enables Boolean operations on signals traveling from device internal resources to the GPIO pins or on signals traveling into the device from external sources. A Smart I/O block sits between the GPIO pins and the high-speed I/O matrix (HSIOM) and is dedicated to a single port.

There are two Smart I/O blocks: one on Port 8 and one on Port 9. When Smart I/O is not enabled, all signals on Port 8 and Port 9 bypass the Smart I/O hardware.

Smart I/O supports:

- System Deep Sleep operation
- Boolean operations without CPU intervention
- Asynchronous or synchronous (clocked) operation

Each Smart I/O block contains a data unit (DU) and eight lookup tables (LUTs).

The DU:

- Performs unique functions based on a selectable opcode.
- Can source input signals from internal resources, the GPIO port, or a value in the DU register.

Each LUT:

- Has three selectable input sources. The input signals may be sourced from another LUT, an internal resource, an external signal from a GPIO pin, or from the DU.
- Acts as a programmable Boolean logic table.
- Can be synchronous or asynchronous.

3.5 Fixed-function digital

3.5.1 Timer/Counter/Pulse-width Modulator (TCPWM)

- The TCPWM supports the following operational modes:
  - Timer-counter with compare
  - Timer-counter with capture
  - Quadrature decoding
  - Pulse width modulation (PWM)
  - Pseudo-random PWM
  - PWM with dead time
- Up, down, and up/down counting modes
- Clock prescaling (division by 1, 2, 4, ... 64, 128)
- Double buffering of compare/capture and period values
- Underflow, overflow, and capture/compare output signals
- Supports interrupt on:
  - Terminal count – Depends on the mode; typically occurs on overflow or underflow
  - Capture/compare – The count is captured to the capture register or the counter value equals the value in the compare register
- Complementary output for PWMs
- Selectable start, reload, stop, count, and capture event signals for each TCPWM; with rising edge, falling edge, both edges, and level trigger options. The TCPWM has a Kill input to force outputs to a predetermined state.

In this device there are:

- Eight 32-bit TCPWMs
- Twenty-four 16-bit TCPWMs

3.5.2 Serial communication blocks (SCB)

This product line has 13 SCBs:

- Eight can implement either I²C, UART, or SPI
- Four can implement either I²C or UART
- One SCB (SCB #8) can operate in system Deep Sleep mode with an external clock; this SCB can be either SPI slave or I²C slave

I²C Mode: The SCB can implement a full multi-master and slave interface (it is capable of multimaster arbitration). This block can operate at speeds of up to 1 Mbps (Fast Mode Plus). It also supports EZI2C, which creates a mailbox address range and effectively reduces I²C communication to reading from and writing to an array in memory. The SCB supports a 256-byte FIFO for receive and transmit.

The I²C peripheral is compatible with I²C standard-mode, Fast Mode, and Fast Mode Plus devices as defined in the NXP I²C-bus specification and user manual (UM10204). The I²C bus I/O is implemented with GPIO in open-drain modes.

UART Mode: This is a full-feature UART operating at up to 8 Mbps. It supports automotive single-wire interface (LIN), infrared interface (IrDA), and SmartCard (ISO7816) protocols, all of which are minor variants of the basic UART protocol. In addition, it supports the 9-bit multiprocessor mode that allows the addressing of peripherals connected over common Rx and Tx lines. Common UART functions such as parity error, break detect, and frame error are supported. A 256-byte FIFO allows much greater CPU service latencies to be tolerated.

SPI Mode: The SPI mode supports full Motorola SPI, TI Secure Simple Pairing (SSP) (essentially adds a start pulse that is used to synchronize SPI Codecs), and National Microwire (half-duplex form of SPI). The SPI block supports an EZSPI mode in which the data interchange is reduced to reading and writing an array in memory. The SPI interface operates with a 25-MHz clock.

3.5.3 USB Full-Speed device/host Interface

PSOC™ 6 has a USB full-speed interface that can be configured either as a USB device or a USB host. The USB device can have up to eight endpoints. A 512-byte SRAM buffer is provided, and DMA-based data transfer is supported. The USB host supports both full-speed (12 Mbps) and low-speed (1.5 Mbps) devices, and is designed to be compliant with USB Specification Revision 2.0. For more details on USB device/host features, see Technical Reference Manual.

***Note**: The USB pins are not frozen in system hibernate mode.*

3.5.4 Quad-SPI/Serial memory interface (SMIF)

A serial memory interface is provided, running at up to 80 MHz. It supports single, dual, quad, dual-quad and octal SPI configurations, and supports up to four external memory devices. It supports two modes of operation:

- Memory-mapped I/O (MMIO), a command mode interface that provides data access via registers and FIFOs
- Execute in Place (XIP), in which AHB reads and writes are directly translated to SPI read and write transfers

In XIP mode, the external memory is mapped into the PSOC™ 6 MCU internal address space, enabling code execution directly from the external memory. To improve performance, a 4-KB cache is included. XIP mode also supports AES-128 on-the-fly encryption and decryption, enabling secured storage and access of code and data in the external memory.

3.5.5 LCD

This block drives LCD commons and segments; routing is available to most of the GPIOs. One to eight of the GPIOs must be used for commons, the rest can be used for segments.

The LCD block has two modes of operation: high speed (8 MHz) and low speed (32 kHz). Both modes operate in system LP and ULP modes. Low-speed mode operates with reduced contrast in system Deep Sleep mode - review the number of common and segment lines, viewing angle requirements, and prototype performance before using this mode.

3.5.6 SD host controllers

This product line contains two Secure Digital (SD) host controllers. They provide communication with IoT connectivity devices such as Bluetooth®, Bluetooth® Low-Energy and WiFi radios, as well as combination devices. The controller also supports embedded MultiMediaCards (eMMC) and Secure Digital (SD) cards.

Several bus speed modes under the SD specification are supported:

- DS (default speed)
- HS (high speed)
- SDR12 (single data rate)
- SDR25
- SDR50
- DDR50 (double data rate)

For eMMC, the supported modes are:

- BWC (backward compatibility)
- SDR

Maximum clock restrictions and capacitive loads apply to some modes, and are also dependent on system power mode (LP/ULP). See the SD Host controller and eMMC specifications for details.

The SD Host Controller complies with the following standards. Refer to the specifications documents for more information on the protocol and operations.

- SD Specifications Part 1 Physical Layer Specification Version 6.00, supporting card capacities for SDSC (up to 2 GB), SDHC (up to 32 GB) and SDXC (up to 2 TB)
- SD Specifications Part A2 SD Host Controller Standard Specification Version 4.20
- SD Specifications Part E1 SDIO Specifications Version 4.10
- Embedded Multi-Media Card (eMMC) Electrical Standard 5.1

The SD Host Controller is configured as a master. To be fully compatible with features provided in the driver software for speed and efficiency, it supports advanced DMA version 3 (ADMA3), defined by the SDIO standard, and has a 1-KB Rx/Tx FIFO allowing double buffering of 512-byte blocks.

3.6 GPIO

This product line has up to 102 GPIOs, which implement the following:

- Eight drive strength modes:
  - Analog input mode (input and output buffers disabled)
  - Input only
  - Weak pull-up with strong pull-down
  - Strong pull-up with weak pull-down
  - Open drain with strong pull-down
  - Open drain with strong pull-up
  - Strong pull-up with strong pull-down
  - Weak pull-up with weak pull-down
- Input threshold select (CMOS or LVTTL)

- Hold mode for latching previous state (used for retaining the I/O state in system Hibernate mode)
- Selectable slew rates for dV/dt-related noise control to improve EMI

The pins are organized in logical entities called ports, which are up to 8 pins in width. Data output and pin state registers store, respectively, the values to be driven on the pins and the input states of the pins.

Every pin can generate an interrupt if enabled; each port has an interrupt request (IRQ) associated with it.

The port 1 pins are capable of overvoltage-tolerant (OVT) operation, where the input voltage may be higher than V_{DDD}. OVT pins are commonly used with I^2C, to allow powering the chip OFF while maintaining a physical connection to an operating I^2C bus without affecting its functionality.

GPIO pins can be ganged to source or sink higher values of current. GPIO pins, including OVT pins, may not be pulled up higher than the absolute maximum; see Electrical specifications.

During power-on and reset, the pins are forced to the analog input drive mode, with input and output buffers disabled, so as not to crowbar any inputs and/or cause excess turn-on current.

A multiplexing network known as the high-speed I/O matrix (HSIOM) is used to multiplex between various peripheral and analog signals that may connect to an I/O pin.

Analog performance is affected by GPIO switching noise. In order to get the best analog performance, the following frequency and drive mode constraints must be applied. The DRIVE_SEL values (refer to Table 6) represent drive strengths (see the architecture and register reference manuals for further detail).

See also Table 5 for additional restrictions for ECO use.

Table 6 DRIVE_SEL values

Ports	Max Frequency	Drive Strength for $V_{DDD} \leq 2.7$ V	Drive Strength for $V_{DDD} > 2.7$ V
Ports 0, 1	8 MHz	DRIVE_SEL 2	DRIVE_SEL 3
Port 2	50 MHz	DRIVE_SEL 1	DRIVE_SEL 2
Ports 3 to 10	16 MHz; 25 MHz for SPI	DRIVE_SEL 2	DRIVE_SEL 3
Ports 11 to 13	80 MHz for SMIF (QSPI).	DRIVE_SEL 1	DRIVE_SEL 2
Ports 9 and 10	Slow slew rate setting for TQFP Packages for ADC performance	No restrictions	No restrictions

3.7 Special-function peripherals

3.7.1 Audio subsystem

This subsystem consists of the following hardware blocks:

- Two Inter-IC Sound (I^2S) interfaces
- Two PDM to PCM decoder channels

Each of the I^2S interfaces implements two independent hardware FIFO buffers – Tx and Rx, which can operate in master or slave mode. The following features are supported:

- Multiple data formats – I^2S, left-justified, Time Division Multiplexed (TDM) mode A, and TDM mode B
- Programmable channel/word lengths – 8/16/18/20/24/32 bits
- Internal/external clock operation up to 192 ksps
- Interrupt mask events – trigger, not empty, full, overflow, underflow, watchdog
- Configurable FIFO trigger level with DMA support

The I²S interface is commonly used to connect with audio codecs, simple DACs, and digital microphones.

The PDM-to-PCM decoder implements a single hardware Rx FIFO that decodes a stereo or mono 1-bit PDM input stream to PCM data output. The following features are supported:

- Programmable data output word length – 16/18/20/24 bits
- Programmable gain amplifier (PGA) for volume control – from –12 dB to +10.5 dB in 1.5 dB steps
- Configurable PDM clock generation. Range from 384 kHz to 3.072 MHz
- Droop correction and configurable decimation rate for sampling; up to 48 ksps
- Programmable high-pass filter gain
- Interrupt mask events – not empty, overflow, trigger, underflow
- Configurable FIFO trigger level with DMA support

The PDM-to-PCM decoder is commonly used to connect to digital PDM microphones. Up to two microphones can be connected to the same PDM Data line.

3.7.2 CAPSENSE™ subsystem

CAPSENSE™ is supported in PSOC™ 6 MCU through a CAPSENSE™ sigma-delta (CSD) hardware block. It is designed for high-sensitivity self-capacitance and mutual-capacitance measurements, and is specifically built for user interface solutions.

In addition to CAPSENSE™, the CSD hardware block supports three general-purpose functions. These are available when CAPSENSE™ is not being used. Alternatively, two or more functions can be time-multiplexed in an application under firmware control. The four functions supported by the CSD hardware block are:

- CAPSENSE™
- 10-bit ADC
- Programmable current sources (IDAC)
- Comparator

CAPSENSE™

Capacitive touch sensors are designed for user interfaces that rely on human body capacitance to detect the presence of a finger on or near a sensor. Infineon CAPSENSE™ solutions bring elegant, reliable, and simple capacitive touch sensing functions to applications including IoT, industrial, automotive, and home appliances.

The Infineon-proprietary CAPSENSE™ technology offers the following features:

- Best-in-class signal-to-noise ratio (SNR) and robust sensing under harsh and noisy conditions
- Self-capacitance (CSD) and mutual-capacitance (CSX) sensing methods
- Support for various widgets, including buttons, matrix buttons, sliders, touchpads, and proximity sensors
- High-performance sensing across a variety of materials
- Best-in-class liquid tolerance
- SmartSense™ auto-tuning technology that helps avoid complex manual tuning processes
- Superior immunity against external noise
- Spread-spectrum clocks for low radiated emissions
- Gesture and built-in self-test libraries
- Ultra-low power consumption
- An integrated graphical CAPSENSE™ tuner for real-time tuning, testing, and debugging

ADC

The CAPSENSE™ subsystem slope ADC offers the following features:

- Selectable 8- or 10-bit resolution

- Selectable input range: GND to V_{REF} and GND to V_{DDA} on any GPIO input
- Measurement of V_{DDA} against an internal reference without the use of GPIO or external components

IDAC

The CSD block has two programmable current sources, which offer the following features:

- 7-bit resolution
- Sink and source current modes
- A current source programmable from 37.5 nA to 609 µA
- Two IDACs that can be used in parallel to form one 8-bit IDAC

Comparator

The CAPSENSE™ subsystem comparator operates in the system Low Power and Ultra-Low Power modes. The inverting input is connected to an internal programmable reference voltage and the non-inverting input can be connected to any GPIO via the AMUXBUS.

CAPSENSE™ hardware subsystem

Figure 7 shows the high-level hardware overview of the CAPSENSE™ subsystem, which includes a delta sigma converter, internal clock dividers, a shield driver, and two programmable current sources.

The inputs are managed through analog multiplexed buses (AMUXBUS A/B). The input and output of all functions offered by the CSD block can be provided on any GPIO or on a group of GPIOs under software control, with the exception of the comparator output and external capacitors that use dedicated GPIOs.

Self-capacitance is supported by the CSD block using AMUXBUS A, an external modulator capacitor, and a GPIO for each sensor. There is a shield electrode (optional) for self-capacitance sensing. This is supported using AMUXBUS B and an optional external shield tank capacitor (to increase the drive capability of the shield driver) should this be required. Mutual-capacitance is supported by the CSD block using AMUXBUS A, two external integrated capacitors, and a GPIO for transmit and receive electrodes.

The ADC does not require an external component. Any GPIO that can be connected to AMUXBUS A can be an input to the ADC under software control. The ADC can accept V_{DDA} as an input without needing GPIOs (for applications such as battery voltage measurement).

The two programmable current sources (IDACs) in general-purpose mode can be connected to AMUXBUS A or B. They can therefore connect to any GPIO pin. The comparator resides in the delta-sigma converter. The comparator inverting input can be connected to the reference. Both comparator inputs can be connected to any GPIO using AMUXBUS B; see Figure 7. The reference has a direct connection to a dedicated GPIO; see Table 9.

The CSD block can operate in active and sleep CPU power modes, and seamlessly transition between system LP and ULP modes. It can be powered down in system Deep Sleep and Hibernate modes. Upon wakeup from Hibernate mode, the CSD block requires re-initialization. However, operation can be resumed without re-initialization upon exit from Deep Sleep mode, under firmware control.

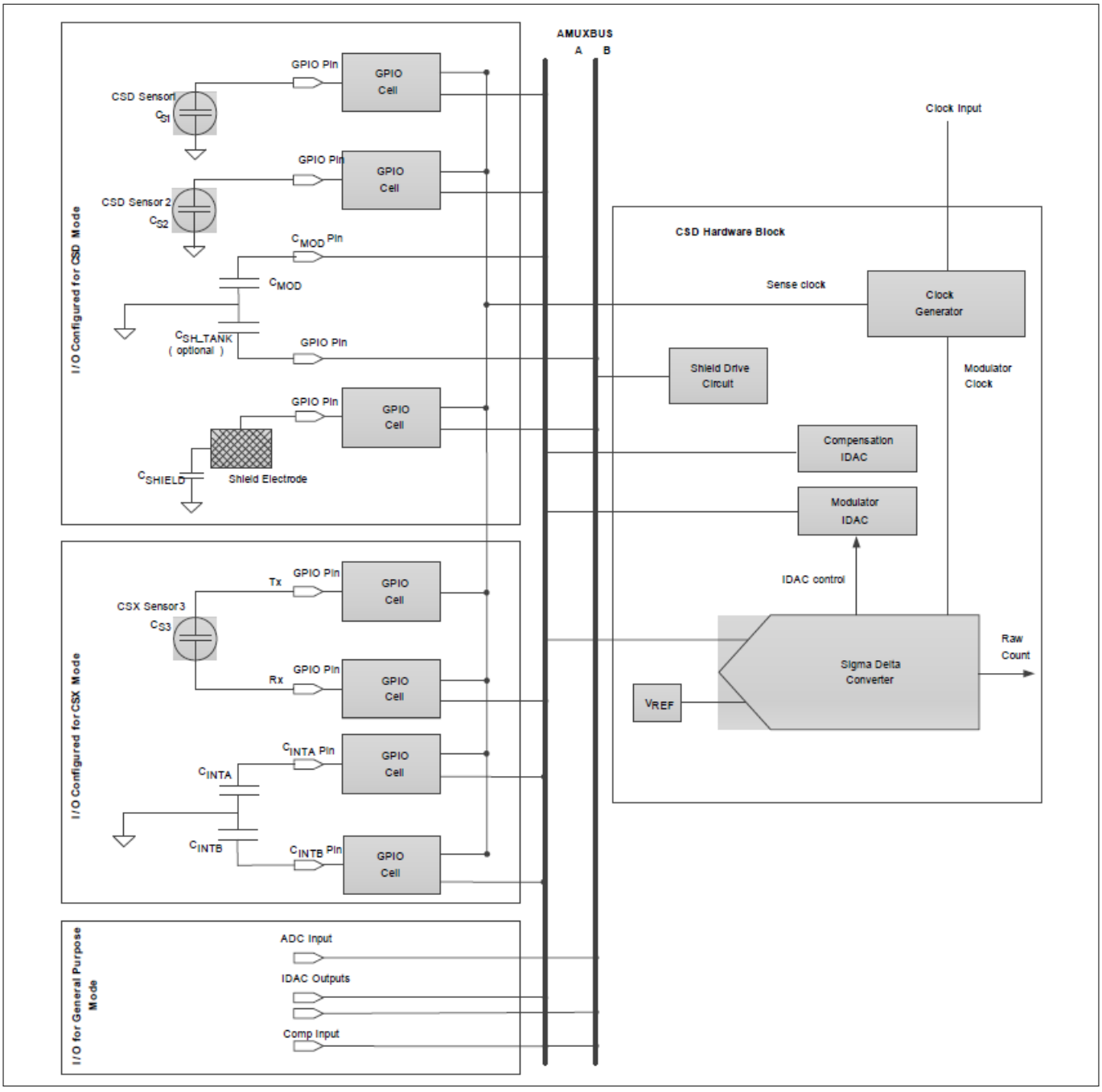

Figure 7 CAPSENSE™ hardware subsystem

Figure 8 shows the high-level software overview. Infineon provides middleware libraries for CAPSENSE™, ADC, and IDAC on GitHub to enable quick integration. The Board Support Package for any kit with CAPSENSE™ capabilities automatically includes the CAPSENSE™ library in any application that uses the BSP.

User applications interact only with middleware to implement functions of the CSD block. The middleware interacts with underlying drivers to access hardware as necessary. The CSD driver facilitates time-multiplexing of the CSD hardware if more than one piece of CSD-related middleware is present in a project. It prevents access conflicts in this case.

ModusToolbox™ software provides a CAPSENSE™ configurator to enable fast library configuration. It also provides a tuner for performance evaluation and real-time tuning of the system. The tuner requires an EZI2C communication interface in the application to enable real-time tuning capability. The tuner can update configuration parameters directly in the device as well as in the configurator.

3 Functional description

CAPSENSE™ and ADC middleware use the CSD interrupt to implement non-blocking sensing and A-to-D conversion. Therefore, interrupt service routines are a defined part of the middleware, which must be initialized by the application. Middleware and drivers can operate on either CPU. Infineon recommends using the middleware only in one CPU. If both CPUs must access the CSD driver, memory access should be managed in the application.

Refer to AN85951: PSOC™ 4 and PSOC™ 6 MCU CAPSENSE™ design guide for more details on CSX sensing, CSD sensing, shield electrode usage and its benefits, and capacitive system design guidelines.

Refer to the API reference guides for CAPSENSE™, ADC, and IDAC available on GitHub.

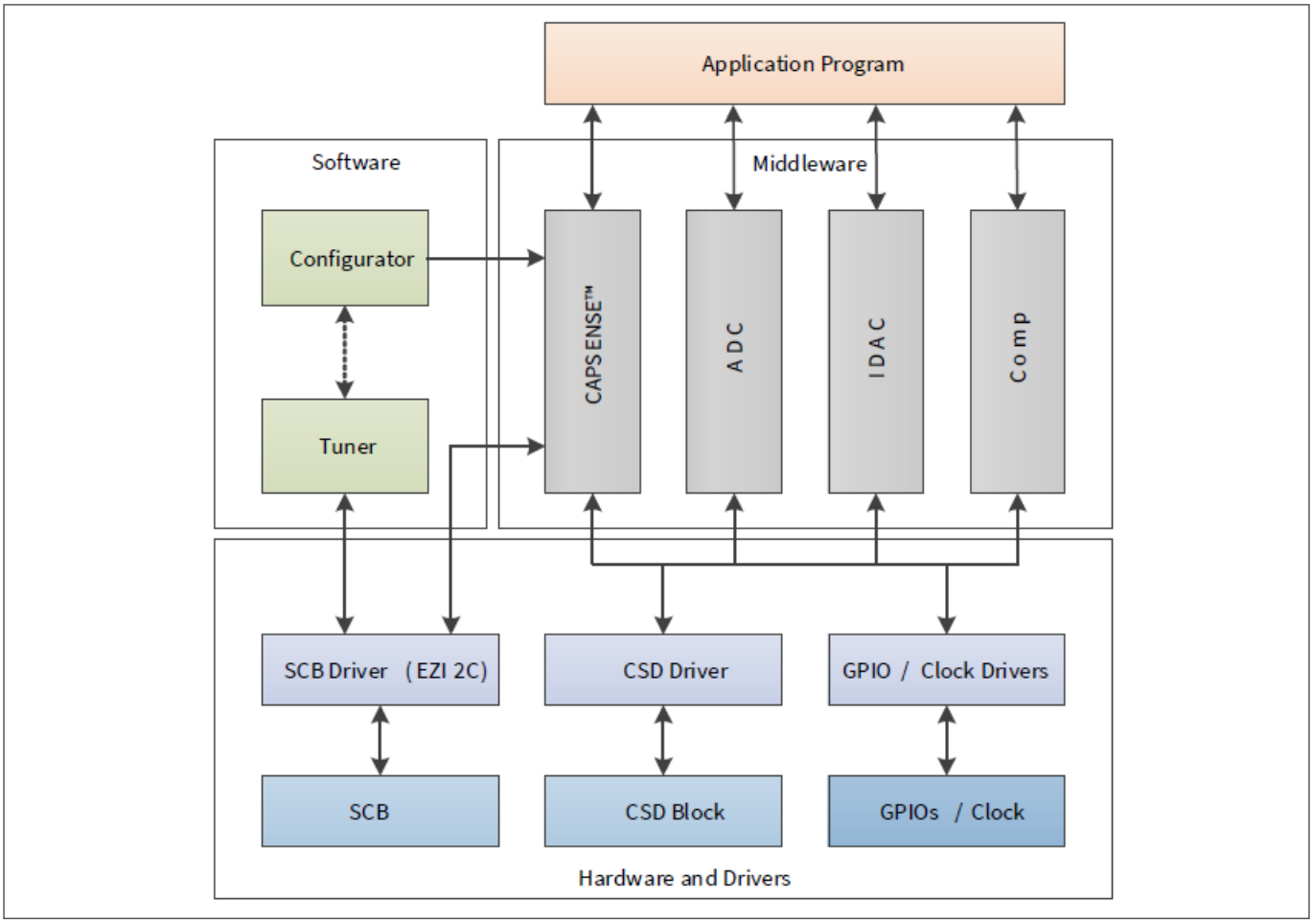

Figure 8 CAPSENSE™ Software/Firmware subsystem

4 Pinouts

***Note**: The CY8C62x8/CY8C62xA Table 7 and Table 8 contains a spreadsheet with the consolidated list of pinouts and pin alternate functions with HSIOM mapping.*

GPIO ports are powered by V_{DDx} pins as follows:

- P0: V_{BACKUP}
- P1: V_{DDD}. Port 1 pins are overvoltage tolerant (OVT)
- P2, P3, P4: V_{DDIO2}
- P5, P6, P7, P8: V_{DDIO1}
- P9, P10: V_{DDIOA}, V_{DDA} (V_{DDIOA}, when present, and V_{DDA} must be connected together on the PCB)
- P11, P12, P13: V_{DDIO0}
- P14: V_{DDUSB}

Table 7 Packages and pin information

Pin	Packages			
	128-pin TQFP	**124-ball BGA**	**100-ball WLCSP**	**68-pin QFN**
V_{DDD}	6	A1	D14	68
V_{CCD}	4, 5	A2	C15	67
V_{DDA}	96	A12	J1	48
V_{DDIOA}	69	A13	-	36
V_{DDIO0}	114	C4	A11	64
V_{DDIO1}	68	K12	K2	35
V_{DDIO2}	39	L4	M10	22
V_{BACKUP}	9	D1	C17	1
V_{DDUSB}	27	M1	J17	11
V_{SS}	7, 8, 25, 26, 36, 40, 67, 70, 95, 115	B12, C3, D4, D10, K4, K10	D2, E13, J13, L1	GND PAD
V_{DD_NS}	23	J1	J15	9
V_{IND1}	24	J2	H16	10
XRES	16	F1	E17	8
V_{REF}	97	B13	C3	49
P0.0	10	E3	F14	2
P0.1	11	E2	G13	3
P0.2	12	E1	D16	4
P0.3	13	F3	E15	5
P0.4	14	F2	G11	6
P0.5	15	G3	F16	7
P1.0	17	G2	H12	–
P1.1	18	G1	G15	–
P1.2	19	H3	–	–
P1.3	20	H2	–	–

(table continues...)

Table 7 (continued) Packages and pin information

Pin	Packages			
	128-pin TQFP	124-ball BGA	100-ball WLCSP	68-pin QFN
P1.4	21	H1	H14	–
P1.5	22	J3	G17	–
P2.0	30	M2	L17	14
P2.1	31	N2	K12	15
P2.2	32	L3	L15	16
P2.3	33	M3	L13	17
P2.4	34	N3	L11	18
P2.5	35	N1	M16	19
P2.6	37	M4	M14	20
P2.7	38	N4	M12	21
P3.0	41	L5	–	23
P3.1	42	M5	–	24
P3.2	43	N5	–	–
P3.3	44	L6	–	–
P3.4	45	M6	–	–
P3.5	46	N6	–	–
P4.0	47	L7	–	–
P4.1	48	M7	–	–
P4.2	49	–	–	–
P4.3	50	–	–	–
P5.0	51	N7	M8	25
P5.1	52	L8	K10	26
P5.2	53	M8	J11	–
P5.3	54	N8	H10	–
P5.4	55	L9	L9	–
P5.5	56	M9	M6	–
P5.6	57	N9	G9	27
P5.7	58	N10	G7	28
P6.0	59	M10	M4	–
P6.1	60	L10	L7	–
P6.2	61	L11	L5	29
P6.3	62	M11	K8	30
P6.4	63	N11	J9	31
P6.5	64	M12	L3	32
P6.6	65	N12	M2	33

(table continues...)

Table 7 (continued) Packages and pin information

Pin	Packages			
	128-pin TQFP	124-ball BGA	100-ball WLCSP	68-pin QFN
P6.7	66	M13	K4	34
P7.0	71	L13	K6	37
P7.1	72	L12	J7	38
P7.2	73	K13	J3	39
P7.3	74	N13	H8	40
P7.4	75	K11	–	–
P7.5	76	J13	–	–
P7.6	77	J12	–	–
P7.7	78	J11	G1	41
P8.0	79	H13	H2	42
P8.1	80	H12	J5	43
P8.2	81	H11	H6	–
P8.3	82	G13	H4	–
P8.4	83	G12	F2	–
P8.5	84	G11	–	–
P8.6	85	F13	–	–
P8.7	86	F12	–	–
P9.0	87	E11	E1	44
P9.1	88	E12	G3	45
P9.2	89	E13	G5	46
P9.3	90	F11	F4	47
P9.4	91	D13	E3	–
P9.5	92	D12	–	–
P9.6	93	D11	–	–
P9.7	94	C13	C1	–
P10.0	98	C12	F6	50
P10.1	99	A11	E5	51
P10.2	100	B11	B2	52
P10.3	101	C11	D4	53
P10.4	102	A10	C5	54
P10.5	103	B10	B4	55
P10.6	104	C10	A3	–
P10.7	105	A9	F8	–
P11.0	106	B9	E9	56
P11.1	107	C9	D6	57

(table continues...)

Table 7 (continued) Packages and pin information

Pin	Packages			
	128-pin TQFP	**124-ball BGA**	**100-ball WLCSP**	**68-pin QFN**
P11.2	108	A8	E7	58
P11.3	109	B8	A7	59
P11.4	110	C8	B6	60
P11.5	111	A7	A5	61
P11.6	112	B7	C7	62
P11.7	113	C7	B8	63
P12.0	116	A6	A9	–
P12.1	117	B6	D8	–
P12.2	118	C6	A13	–
P12.3	119	A5	B10	–
P12.4	120	B5	C9	–
P12.5	121	C5	B12	–
P12.6	122	A4	C11	65
P12.7	123	B4	D10	66
P13.0	124	B1	B14	–
P13.1	125	A3	A15	–
P13.2	126	B3	C13	–
P13.3	127	B2	D12	–
P13.4	128	C2	E11	–
P13.5	1	C1	F10	–
P13.6	2	D3	F12	–
P13.7	3	D2	B16	–
P14.0 / USBDP	29	L2	K14	13
P14.1 / USBDM	28	L1	K16	12

***Note**: Balls K2 and K3 are connected together internally in the 124-ball BGA package.*

***Note**: If the USB pins are not used, connect V_{DDUSB} to ground and leave the P14.0/USBDP and P14.1/USBDM pins unconnected.*

4 Pinouts

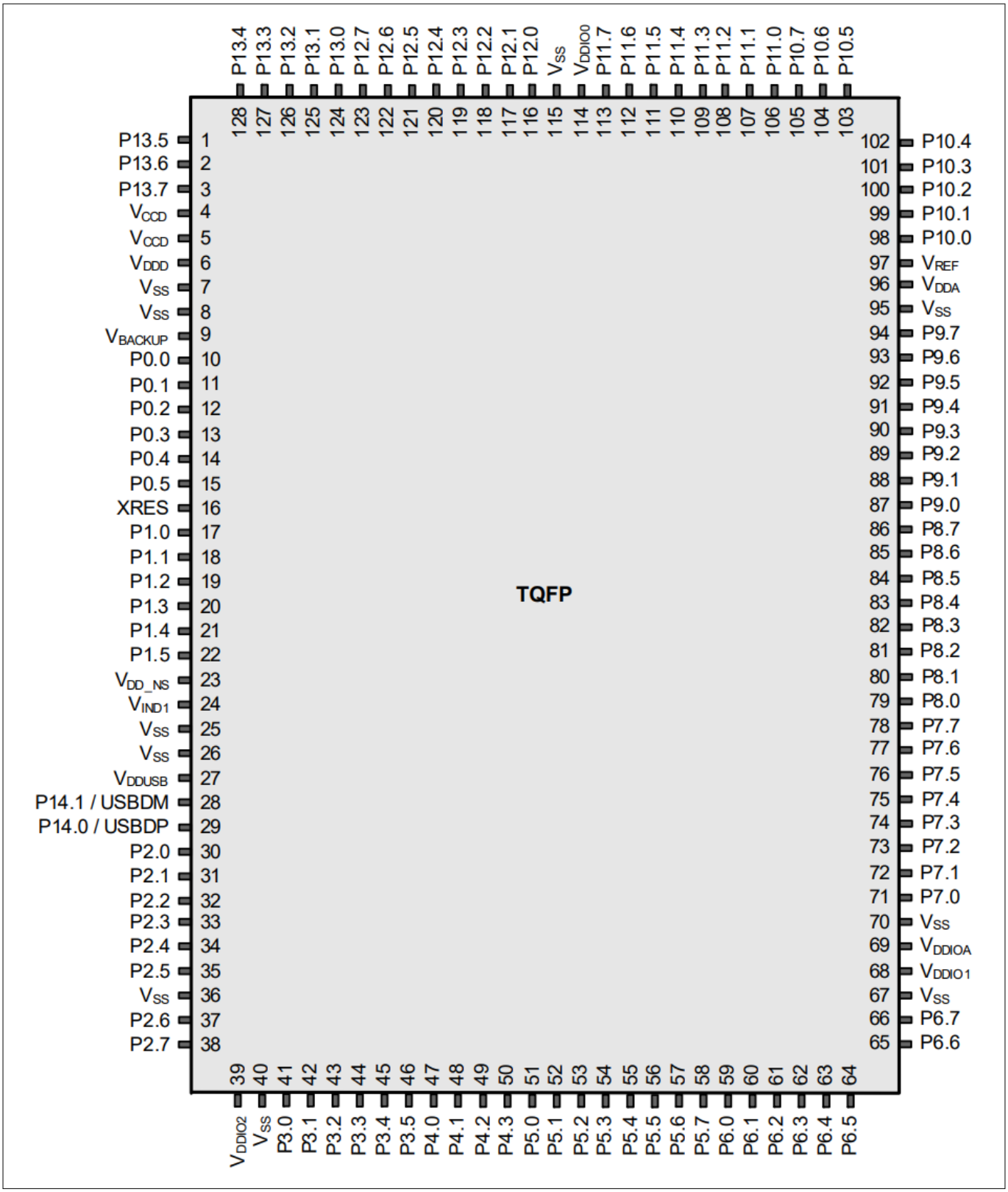

Figure 9 Device pinout for 128-pin TQFP package

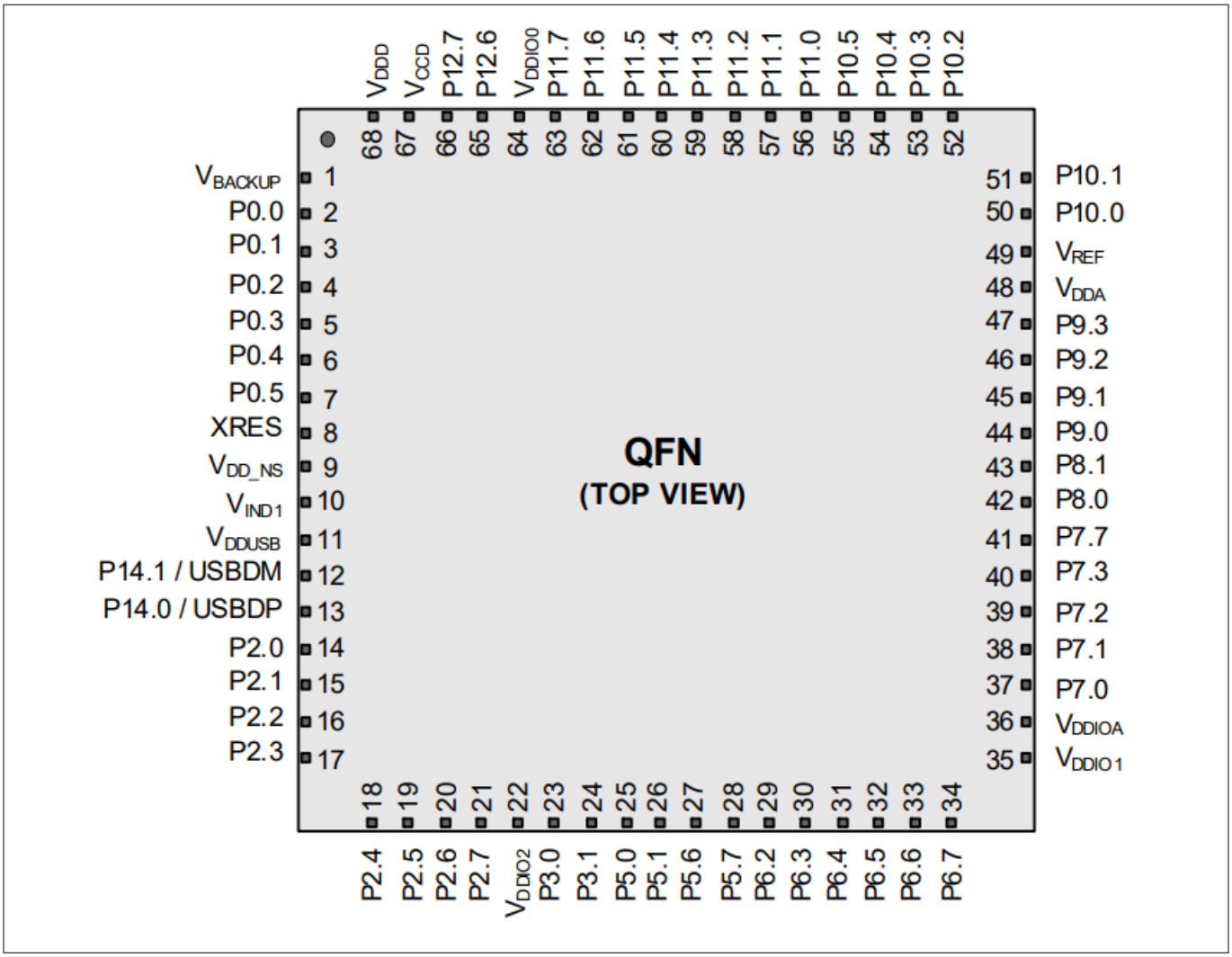

Figure 10 Device pinout for 68-pin QFN package[1)]

Each port pin has multiple alternate functions. These are defined in Table 8. The columns ACT #x and DS #y denote active (System LP/ULP) and Deep Sleep mode signals respectively.

The notation for a signal is of the form `IPName[x].signal_name[u]:y`.

IPName = Name of the block (such as tcpwm), x = Unique instance of the IP, Signal_name = Name of the signal, u = Signal number where there is more than one signal for a particular signal name, y = Designates copies of the signal name.

For example, the name `tcpwm[0].line_compl[3]:4` indicates that this is instance 0 of a tcpwm block, the signal is `line_compl # 3` (complement of the line output) and this is the fourth occurrence (copy) of the signal. Signal copies are provided to allow flexibility in routing and to maximize use of on-chip resources.

For ease of use, the CY8C62x8 and CY8C62xA datasheet web page contains a spreadsheet with the consolidated list of pin functions.

1 The center pad on the QFN package should be connected to PCB ground relative to device VDDx for best mechanical, thermal, and electrical performance. For more information, see AN72845, Design Guidelines for QFN Devices.

Table 8 Multiple alternate functions

Port/Pin	ACT #0	ACT #1	ACT #2	ACT #3	DS #2	DS #3	ACT #4	ACT #5	ACT #6	ACT #7	ACT #8	ACT #9	ACT #10	ACT #12	ACT #13	ACT #14	ACT #15	DS #5	DS #6
P0.0	tcpwm[0].line[0]:0	tcpwm[1].line[0]:0	csd.csd_tx:0	csd.csd_tx_n:0			srss.ext_clk:0				scb[0].spi_select1:0			peri.tr_io_input[0]:0					
P0.1	tcpwm[0].line_compl[0]:0	tcpwm[1].line_compl[0]:0	csd.csd_tx:1	csd.csd_tx_n:1							scb[0].spi_select2:0			peri.tr_io_input[1]:0					
P0.2	tcpwm[0].line[1]:0	tcpwm[1].line[1]:0	csd.csd_tx:2	csd.csd_tx_n:2					scb[0].uart_rx:0	scb[0].i2c_scl:0	scb[0].spi_mosi:0								
P0.3	tcpwm[0].line_compl[1]:0	tcpwm[1].line_compl[1]:0	csd.csd_tx:3	csd.csd_tx_n:3					scb[0].uart_tx:0	scb[0].i2c_sda:0	scb[0].spi_miso:0								
P0.4	tcpwm[0].line[2]:0	tcpwm[1].line[2]:0	csd.csd_tx:4	csd.csd_tx_n:4					scb[0].uart_rts:0		scb[0].spi_clk:0				peri.tr_io_output[0]:2				
P0.5	tcpwm[0].line_compl[2]:0	tcpwm[1].line_compl[2]:0	csd.csd_tx:5	csd.csd_tx_n:5			srss.ext_clk:1		scb[0].uart_cts:0		scb[0].spi_select0:0				peri.tr_io_output[1]:2				

(table continues...)

Table 8 (continued) Multiple alternate functions

Port/Pin	ACT #0	ACT #1	ACT #2	ACT #3	DS #2	DS #3	ACT #4	ACT #5	ACT #6	ACT #7	ACT #8	ACT #9	ACT #10	ACT #12	ACT #13	ACT #14	ACT #15	DS #5	DS #6
P1.0	tcpwm[0].line[3]:0	tcpwm[1].line[3]:0	csd.csd_tx:6	csd.csd_tx_n:6					scb[7].uart_rx:0	scb[7].i2c_scl:0	scb[7].spi_mosi:0			peri.tr_io_input[2]:0					
P1.1	tcpwm[0].line_compl[3]:0	tcpwm[1].line_compl[3]:0	csd.csd_tx:7	csd.csd_tx_n:7					scb[7].uart_tx:0	scb[7].i2c_sda:0	scb[7].spi_miso:0			peri.tr_io_input[3]:0					
P1.2	tcpwm[0].line[4]:4	tcpwm[1].line[12]:1	csd.csd_tx:8	csd.csd_tx_n:8					scb[7].uart_rts:0		scb[7].spi_clk:0								
P1.3	tcpwm[0].line_compl[4]:4	tcpwm[1].line_compl[12]:1	csd.csd_tx:9	csd.csd_tx_n:9					scb[7].uart_cts:0		scb[7].spi_select0:0								
P1.4	tcpwm[0].line[5]:4	tcpwm[1].line[13]:1	csd.csd_tx:10	csd.csd_tx_n:10							scb[7].spi_select1:0								
P1.5	tcpwm[0].line_compl[5]:4	tcpwm[1].line_compl[14]:1	csd.csd_tx:11	csd.csd_tx_n:11							scb[7].spi_select2:0								

(table continues...)

Table 8 (continued) Multiple alternate functions

Port/Pin	ACT #0	ACT #1	ACT #2	ACT #3	DS #2	DS #3	ACT #4	ACT #5	ACT #6	ACT #7	ACT #8	ACT #9	ACT #10	ACT #12	ACT #13	ACT #14	ACT #15	DS #5	DS #6
P2.0	tcpwm[0].line[6]:4	tcpwm[1].line[15]:1	csd.csd_tx:12	csd.csd_tx_n:12					scb[1].uart_rx:0	scb[1].i2c_scl:0	scb[1].spi_mosi:0			peri.tr_io_input[4]:0		sdhc[0].card_dat_3to0[0]			
P2.1	tcpwm[0].line_compl[6]:4	tcpwm[1].line_compl[15]:1	csd.csd_tx:13	csd.csd_tx_n:13					scb[1].uart_tx:0	scb[1].i2c_sda:0	scb[1].spi_miso:0			peri.tr_io_input[5]:0		sdhc[0].card_dat_3to0[1]			
P2.2	tcpwm[0].line[7]:4	tcpwm[1].line[16]:1	csd.csd_tx:14	csd.csd_tx_n:14					scb[1].uart_rts:0		scb[1].spi_clk:0					sdhc[0].card_dat_3to0[2]			
P2.3	tcpwm[0].line_compl[7]:4	tcpwm[1].line_compl[16]:1	csd.csd_tx:15	csd.csd_tx_n:15					scb[1].uart_cts:0		scb[1].spi_select0:0					sdhc[0].card_dat_3to0[3]			
P2.4	tcpwm[0].line[0]:5	tcpwm[1].line[17]:1	csd.csd_tx:16	csd.csd_tx_n:16					scb[9].uart_rx:0	scb[9].i2c_scl:0	scb[1].spi_select1:0					sdhc[0].card_cmd			
P2.5	tcpwm[0].line_compl[0]:5	tcpwm[1].line_compl[17]:1	csd.csd_tx:17	csd.csd_tx_n:17					scb[9].uart_tx:0	scb[9].i2c_sda:0	scb[1].spi_select2:0					sdhc[0].clk_card			

(table continues...)

Table 8 (continued) Multiple alternate functions

Port/Pin	ACT #0	ACT #1	ACT #2	ACT #3	DS #2	DS #3	ACT #4	ACT #5	ACT #6	ACT #7	ACT #8	ACT #9	ACT #10	ACT #12	ACT #13	ACT #14	ACT #15	DS #5	DS #6
P2.6	tcpwm[0].line[1]:5	tcpwm[1].line[18]:1	csd.csd_tx:18	csd.csd_tx_n:18					scb[9].uart_rts:0		scb[1].spi_select3:0					sdhc[0].card_detect_n			
P2.7	tcpwm[0].line_compl[1]:5	tcpwm[1].line_compl[18]:1	csd.csd_tx:19	csd.csd_tx_n:19					scb[9].uart_cts:0							sdhc[0].card_mech_write_prot			
P3.0	tcpwm[0].line[2]:5	tcpwm[1].line[19]:1	csd.csd_tx:20	csd.csd_tx_n:20					scb[2].uart_rx:1	scb[2].i2c_scl:1	scb[2].spi_mosi:1			peri.tr_io_input[6]:0		sdhc[0].io_volt_sel			
P3.1	tcpwm[0].line_compl[2]:5	tcpwm[1].line_compl[19]:1	csd.csd_tx:21	csd.csd_tx_n:21					scb[2].uart_tx:1	scb[2].i2c_sda:1	scb[2].spi_miso:1			peri.tr_io_input[7]:0		sdhc[0].card_if_pwr_en			
P3.2	tcpwm[0].line[3]:5	tcpwm[1].line[20]:1	csd.csd_tx:22	csd.csd_tx_n:22					scb[2].uart_rts:1		scb[2].spi_clk:1								
P3.3	tcpwm[0].line_compl[3]:5	tcpwm[1].line_compl[20]:1	csd.csd_tx:23	csd.csd_tx_n:23					scb[2].uart_cts:1		scb[2].spi_select0:1								

(table continues...)

Table 8 (continued) Multiple alternate functions

Port/Pin	ACT #0	ACT #1	ACT #2	ACT #3	DS #2	DS #3	ACT #4	ACT #5	ACT #6	ACT #7	ACT #8	ACT #9	ACT #10	ACT #12	ACT #13	ACT #14	ACT #15	DS #5	DS #6
P3.4	tcpwm[0].line[4]:5	tcpwm[1].line[21]:1	csd.csd_tx:24	csd.csd_tx_n:24							scb[2].spi_select1:1								
P3.5	tcpwm[0].line_compl[4]:5	tcpwm[1].line_compl[21]:1	csd.csd_tx:25	csd.csd_tx_n:25							scb[2].spi_select2:1								
P4.0	tcpwm[0].line[5]:5	tcpwm[1].line[22]:1	csd.csd_tx:26	csd.csd_tx_n:26					scb[7].uart_rx:1	scb[7].i2c_scl:1	scb[7].spi_mosi:1			peri.tr_io_input[8]:0					
P4.1	tcpwm[0].line_compl[5]:5	tcpwm[1].line_compl[22]:1	csd.csd_tx:27	csd.csd_tx_n:27					scb[7].uart_tx:1	scb[7].i2c_sda:1	scb[7].spi_miso:1			peri.tr_io_input[9]:0					
P4.2	tcpwm[0].line[6]:5	tcpwm[1].line[23]:1	csd.csd_tx:28	csd.csd_tx_n:28					scb[7].uart_rts:1		scb[7].spi_clk:1								
P4.3	tcpwm[0].line_compl[6]:5	tcpwm[1].line_compl[23]:1	csd.csd_tx:29	csd.csd_tx_n:29					scb[7].uart_cts:1		scb[7].spi_select0:1								

(table continues...)

Table 8 (continued) Multiple alternate functions

Port/Pin	ACT #0	ACT #1	ACT #2	ACT #3	DS #2	DS #3	ACT #4	ACT #5	ACT #6	ACT #7	ACT #8	ACT #9	ACT #10	ACT #12	ACT #13	ACT #14	ACT #15	DS #5	DS #6
P5.0	tcpwm[0].line[4]:0	tcpwm[1].line[4]:0	csd.csd_tx:30	csd.csd_tx_n:30					scb[5].uart_rx:0	scb[5].i2c_scl:0	scb[5].spi_mosi:0		audioss[0].clk_i2s_if:0	peri.tr_io_input[10]:0					
P5.1	tcpwm[0].line_compl[4]:0	tcpwm[1].line_compl[4]:0	csd.csd_tx:31	csd.csd_tx_n:31					scb[5].uart_tx:0	scb[5].i2c_sda:0	scb[5].spi_miso:0		audioss[0].tx_sck:0	peri.tr_io_input[11]:0					
P5.2	tcpwm[0].line[5]:0	tcpwm[1].line[5]:0	csd.csd_tx:32	csd.csd_tx_n:32					scb[5].uart_rts:0		scb[5].spi_clk:0		audioss[0].tx_ws:0						
P5.3	tcpwm[0].line_compl[5]:0	tcpwm[1].line_compl[5]:0	csd.csd_tx:33	csd.csd_tx_n:33					scb[5].uart_cts:0		scb[5].spi_select0:0		audioss[0].tx_sdo:0						
P5.4	tcpwm[0].line[6]:0	tcpwm[1].line[6]:0	csd.csd_tx:34	csd.csd_tx_n:34					scb[10].uart_rx:0	scb[10].i2c_scl:0	scb[5].spi_select1:0		audioss[0].rx_sck:0						
P5.5	tcpwm[0].line_compl[6]:0	tcpwm[1].ine_compl[6]:0	csd.csd_tx:35	csd.csd_tx_n:35					scb[10].uart_tx:0	scb[10].i2c_sda:0	scb[5].spi_select2:0		audioss[0].rx_ws:0						

(table continues...)

Table 8 (continued) Multiple alternate functions

Port/Pin	ACT #0	ACT #1	ACT #2	ACT #3	DS #2	DS #3	ACT #4	ACT #5	ACT #6	ACT #7	ACT #8	ACT #9	ACT #10	ACT #12	ACT #13	ACT #14	ACT #15	DS #5	DS #6
P5.6	tcpwm[0].line[7]:0	tcpwm[1].line[7]:0	csd.csd_tx:36	csd.csd_tx_n:36					scb[10].uart_rts:0		scb[5].spi_select3:0		audioss[0].rx_sdi:0						
P5.7	tcpwm[0].line_compl[7]:0	tcpwm[1].line_compl[7]:0	csd.csd_tx:37	csd.csd_tx_n:37					scb[10].uart_cts:0		scb[3].spi_select3:0								
P6.0	tcpwm[0].line[0]:1	tcpwm[1].line[8]:0	csd.csd_tx:38	csd.csd_tx_n:38	scb[8].i2c_scl:0				scb[3].uart_rx:0	scb[3].i2c_scl:0	scb[3].spi_mosi:0				cpuss.fault_out[0]				scb[8].spi_mosi:0
P6.1	tcpwm[0].line_compl[0]:1	tcpwm[1].line_compl[8]:0	csd.csd_tx:39	csd.csd_tx_n:39	scb[8].i2c_sda:0				scb[3].uart_tx:0	scb[3].i2c_sda:0	scb[3].spi_miso:0				cpuss.fault_out[1]				scb[8].spi_miso:0
P6.2	tcpwm[0].line[1]:1	tcpwm[1].line[9]:0	csd.csd_tx:40	csd.csd_tx_n:40					scb[3].uart_rts:0		scb[3].spi_clk:0								scb[8].spi_clk:0

(table continues...)

Table 8 (continued) Multiple alternate functions

Port/Pin	ACT #0	ACT #1	ACT #2	ACT #3	DS #2	DS #3	ACT #4	ACT #5	ACT #6	ACT #7	ACT #8	ACT #9	ACT #10	ACT #12	ACT #13	ACT #14	ACT #15	DS #5	DS #6
P6.3	tcpwm[0].line_compl[1]:1	tcpwm[1].line_compl[9]:0	csd.csd_tx:41	csd.csd_tx_n:41					scb[3].uart_cts:0		scb[3].spi_select0:0								scb[8].spi_select0:0
P6.4	tcpwm[0].line[2]:1	tcpwm[1].line[10]:0	csd.csd_tx:42	csd.csd_tx_n:42	scb[8].i2c_scl:1				scb[6].uart_rx:2	scb[6].i2c_scl:2	scb[6].spi_mosi:2			peri.tr_io_input[12]:0	peri.tr_io_output[0]:1			cpuss.swj_swo_tdo	scb[8].spi_mosi:1
P6.5	tcpwm[0].line_compl[2]:1	tcpwm[1].line_compl[10]:0	csd.csd_tx:43	csd.csd_tx_n:43	scb[8].i2c_sda:1				scb[6].uart_tx:2	scb[6].i2c_sda:2	scb[6].spi_miso:2			peri.tr_io_input[13]:0	peri.tr_io_output[1]:1			cpuss.swj_swdoe_tdi	scb[8].spi_miso:1
P6.6	tcpwm[0].line[3]:1	tcpwm[1].line[11]:0	csd.csd_tx:44	csd.csd_tx_n:44					scb[6].uart_rts:2		scb[6].spi_clk:2							cpuss.swj_swdio_tms	scb[8].spi_clk:1

(table continues...)

Table 8 (continued) Multiple alternate functions

Port/Pin	ACT #0	ACT #1	ACT #2	ACT #3	DS #2	DS #3	ACT #4	ACT #5	ACT #6	ACT #7	ACT #8	ACT #9	ACT #10	ACT #12	ACT #13	ACT #14	ACT #15	DS #5	DS #6
P6.7	tcpwm[0].line_compl[3]:1	tcpwm[1].line_compl[11]:0	csd.csd_tx:45	csd.csd_tx_n:45					scb[6].uart_cts:2		scb[6].spi_select0:2							cpuss.swj_swclk_tclk	scb[8].spi_select0:1
P7.0	tcpwm[0].line[4]:1	tcpwm[1].line[12]:0	csd.csd_tx:46	csd.csd_tx_n:46					scb[4].uart_rx:1	scb[4].i2c_scl:1	scb[4].spi_mosi:1			peri.tr_io_input[14]:0		cpuss.trace_clock			
P7.1	tcpwm[0].line_compl[4]:1	tcpwm[1].line_compl[12]:0	csd.csd_tx:47	csd.csd_tx_n:47					scb[4].uart_tx:1	scb[4].i2c_sda:1	scb[4].spi_miso:1			peri.tr_io_input[15]:0					
P7.2	tcpwm[0].line[5]:1	tcpwm[1].line[13]:0	csd.csd_tx:48	csd.csd_tx_n:48					scb[4].uart_rts:1		scb[4].spi_clk:1								
P7.3	tcpwm[0].line_compl[5]:1	tcpwm[1].line_compl[13]:0	csd.csd_tx:49	csd.csd_tx_n:49					scb[4].uart_cts:1		scb[4].spi_select0:1								
P7.4	tcpwm[0].line[6]:1	tcpwm[1].line[14]:0	csd.csd_tx:50	csd.csd_tx_n:50							scb[4].spi_select1:1						cpuss.trace_data[3]:2		

(table continues...)

Table 8 (continued) Multiple alternate functions

Port/Pin	ACT #0	ACT #1	ACT #2	ACT #3	DS #2	DS #3	ACT #4	ACT #5	ACT #6	ACT #7	ACT #8	ACT #9	ACT #10	ACT #12	ACT #13	ACT #14	ACT #15	DS #5	DS #6
P7.5	tcpwm[0].line_compl[6]:1	tcpwm[1].line_compl[14]:0	csd.csd_tx:51	csd.csd_tx_n:51							scb[4].spi_select2:1						cpuss.trace_data[2]:2		
P7.6	tcpwm[0].line[7]:1	tcpwm[1].line[15]:0	csd.csd_tx:52	csd.csd_tx_n:52							scb[4].spi_select3:1						cpuss.trace_data[1]:2		
P7.7	tcpwm[0].line_compl[7]:1	tcpwm[1].line_compl[15]:0	csd.csd_tx:53	csd.csd_tx_n:53							scb[3].spi_select1:0	cpuss.clk_fm_pump					cpuss.trace_data[0]:2		
P8.0	tcpwm[0].line[0]:2	tcpwm[1].line[16]:0	csd.csd_tx:54	csd.csd_tx_n:54					scb[4].uart_rx:0	scb[4].i2c_scl:0	scb[4].spi_mosi:0			peri.tr_io_input[16]:0					
P8.1	tcpwm[0].line_compl[0]:2	tcpwm[1].line_compl[16]:0	csd.csd_tx:55	csd.csd_tx_n:55					scb[4].uart_tx:0	scb[4].i2c_sda:0	scb[4].spi_miso:0			peri.tr_io_input[17]:0					
P8.2	tcpwm[0].line[1]:2	tcpwm[1].line[17]:0	csd.csd_tx:56	csd.csd_tx_n:56		lpcomp.dsi_comp0:0			scb[4].uart_rts:0		scb[4].spi_clk:0								

(table continues...)

Table 8 (continued) Multiple alternate functions

Port/Pin	ACT #0	ACT #1	ACT #2	ACT #3	DS #2	DS #3	ACT #4	ACT #5	ACT #6	ACT #7	ACT #8	ACT #9	ACT #10	ACT #12	ACT #13	ACT #14	ACT #15	DS #5	DS #6
P8.3	tcpwm[0].line_compl[1]:2	tcpwm[1].line_compl[17]:0	csd.csd_tx:57	csd.csd_tx_n:57		lpcomp.dsi_comp1:0			scb[4].uart_cts:0		scb[4].spi_select0:0								
P8.4	tcpwm[0].line[2]:2	tcpwm[1].line[18]:0	csd.csd_tx:58	csd.csd_tx_n:58					scb[11].uart_rx:0	scb[11].i2c_scl:0	scb[4].spi_select1:0								
P8.5	tcpwm[0].line_compl[2]:2	tcpwm[1].line_compl[18]:0	csd.csd_tx:59	csd.csd_tx_n:59					scb[11].uart_tx:0	scb[11].i2c_sda:0	scb[4].spi_select2:0								
P8.6	tcpwm[0].line[3]:2	tcpwm[1].line[19]:0	csd.csd_tx:60	csd.csd_tx_n:60					scb[11].uart_rts:0		scb[4].spi_select3:0								
P8.7	tcpwm[0].line_compl[3]:2	tcpwm[1].line_compl[19]:0	csd.csd_tx:61	csd.csd_tx_n:61					scb[11].uart_cts:0		scb[3].spi_select2:0								
P9.0	tcpwm[0].line[4]:2	tcpwm[1].line[20]:0	csd.csd_tx:62	csd.csd_tx_n:62					scb[2].uart_rx:0	scb[2].i2c_scl:0	scb[2].spi_mosi:0		audioss[0].clk_i2s_if:1	peri.tr_io_input[18]:0			cpuss.trace_data[3]:0		

(table continues...)

Table 8 (continued) Multiple alternate functions

Port/Pin	ACT #0	ACT #1	ACT #2	ACT #3	DS #2	DS #3	ACT #4	ACT #5	ACT #6	ACT #7	ACT #8	ACT #9	ACT #10	ACT #12	ACT #13	ACT #14	ACT #15	DS #5	DS #6
P9.1	tcpwm[0].line_compl[4]:2	tcpwm[1].line_compl[20]:0	csd.csd_tx:63	csd.csd_tx_n:63					scb[2].uart_tx:0	scb[2].i2c_sda:0	scb[2].spi_miso:0		audioss[0].tx_sck:1	peri.tr_io_input[19]:0			cpuss.trace_data[2]:0		
P9.2	tcpwm[0].line[5]:2	tcpwm[1].line[21]:0	csd.csd_tx:64	csd.csd_tx_n:64					scb[2].uart_rts:0		scb[2].spi_clk:0		audioss[0].tx_ws:1				cpuss.trace_data[1]:0		
P9.3	tcpwm[0].line_compl[5]:2	tcpwm[1].line_compl[21]:0	csd.csd_tx:65	csd.csd_tx_n:65					scb[2].uart_cts:0		scb[2].spi_select0:0		audioss[0].tx_sdo:1				cpuss.trace_data[0]:0		
P9.4	tcpwm[0].line[7]:5	tcpwm[1].line[0]:2	csd.csd_tx:66	csd.csd_tx_n:66							scb[2].spi_select1:0		audioss[0].rx_sck:1						
P9.5	tcpwm[0].line_compl[7]:5	tcpwm[1].line_compl[0]:2	csd.csd_tx:67	csd.csd_tx_n:67							scb[2].spi_select2:0		audioss[0].rx_ws:1						
P9.6	tcpwm[0].line[0]:6	tcpwm[1].line[1]:2	csd.csd_tx:68	csd.csd_tx_n:68							scb[2].spi_select3:0		audioss[0].rx_sdi:1						

(table continues...)

Table 8 (continued) Multiple alternate functions

Port/Pin	ACT #0	ACT #1	ACT #2	ACT #3	DS #2	DS #3	ACT #4	ACT #5	ACT #6	ACT #7	ACT #8	ACT #9	ACT #10	ACT #12	ACT #13	ACT #14	ACT #15	DS #5	DS #6
P9.7	tcpwm[0].line_compl[0]:6	tcpwm[1].line_compl[1]:2	csd.csd_tx:69	csd.csd_tx_n:69															
P10.0	tcpwm[0].line[6]:2	tcpwm[1].line[22]:0	csd.csd_tx:70	csd.csd_tx_n:70					scb[1].uart_rx:1	scb[1].i2c_scl:1	scb[1].spi_mosi:1			peri.tr_io_input[20]:0			cpuss.trace_data[3]:1		
P10.1	tcpwm[0].line_compl[6]:2	tcpwm[1].line_compl[22]:0	csd.csd_tx:71	csd.csd_tx_n:71					scb[1].uart_tx:1	scb[1].i2c_sda:1	scb[1].spi_miso:1			peri.tr_io_input[21]:0			cpuss.trace_data[2]:1		
P10.2	tcpwm[0].line[7]:2	tcpwm[1].line[23]:0	csd.csd_tx:72	csd.csd_tx_n:72					scb[1].uart_rts:1		scb[1].spi_clk:1						cpuss.trace_data[1]:1		
P10.3	tcpwm[0].line_compl[7]:2	tcpwm[1].line_compl[23]:0	csd.csd_tx:73	csd.csd_tx_n:73					scb[1].uart_cts:1		scb[1].spi_select0:1						cpuss.trace_data[0]:1		
P10.4	tcpwm[0].line[0]:3	tcpwm[1].line[0]:1	csd.csd_tx:74	csd.csd_tx_n:74							scb[1].spi_select1:1	audioss[0].pdm_clk:0							

(table continues...)

Table 8 (continued) Multiple alternate functions

Port/Pin	ACT #0	ACT #1	ACT #2	ACT #3	DS #2	DS #3	ACT #4	ACT #5	ACT #6	ACT #7	ACT #8	ACT #9	ACT #10	ACT #12	ACT #13	ACT #14	ACT #15	DS #5	DS #6
P10.5	tcpwm[0].line_compl[0]:3	tcpwm[1].line_compl[0]:1	csd.csd_tx:75	csd.csd_tx_n:75							scb[1].spi_select2:1	audioss[0].pdm_data:0							
P10.6	tcpwm[0].line[1]:6	tcpwm[1].line[2]:2	csd.csd_tx:76	csd.csd_tx_n:76							scb[1].spi_select3:1								
P10.7	tcpwm[0].line_compl[1]:6	tcpwm[1].line_compl[2]:2	csd.csd_tx:77	csd.csd_tx_n:77															
P11.0	tcpwm[0].line[1]:3	tcpwm[1].line[1]:1	csd.csd_tx:78	csd.csd_tx_n:78				smif.spi_select2	scb[5].uart_rx:1	scb[5].i2c_scl:1	scb[5].spi_mosi:1		audioss[1].clk_i2s_if:1	peri.tr_io_input[22]:0					
P11.1	tcpwm[0].line_compl[1]:3	tcpwm[1].line_compl[1]:1	csd.csd_tx:79	csd.csd_tx_n:79				smif.spi_select1	scb[5].uart_tx:1	scb[5].i2c_sda:1	scb[5].spi_miso:1		audioss[1].tx_sck:1	peri.tr_io_input[23]:0					
P11.2	tcpwm[0].line[2]:3	tcpwm[1].line[2]:1	csd.csd_tx:80	csd.csd_tx_n:80				smif.spi_select0	scb[5].uart_rts:1		scb[5].spi_clk:1		audioss[1].tx_ws:1						

(table continues...)

Table 8 (continued) Multiple alternate functions

Port/Pin	ACT #0	ACT #1	ACT #2	ACT #3	DS #2	DS #3	ACT #4	ACT #5	ACT #6	ACT #7	ACT #8	ACT #9	ACT #10	ACT #12	ACT #13	ACT #14	ACT #15	DS #5	DS #6
P11.3	tcpwm[0].line_compl[2]:3	tcpwm[1].line_compl[2]:1	csd.csd_tx:81	csd.csd_tx_n:81				smif.spi_data3	scb[5].uart_cts:1		scb[5].spi_select0:1		audioss[1].tx_sdo:1		peri.tr_io_output[0]:0				
P11.4	tcpwm[0].line[3]:3	tcpwm[1].line[3]:1	csd.csd_tx:82	csd.csd_tx_n:82				smif.spi_data2			scb[5].spi_select1:1		audioss[1].rx_sck:1		peri.tr_io_output[1]:0				
P11.5	tcpwm[0].line_compl[3]:3	tcpwm[1].line_compl[3]:1	csd.csd_tx:83	csd.csd_tx_n:83				smif.spi_data1			scb[5].spi_select2:1		audioss[1].rx_ws:1						
P11.6			csd.csd_tx:84	csd.csd_tx_n:84				smif.spi_data0			scb[5].spi_select3:1		audioss[1].rx_sdi:1						
P11.7								smif.spi_clk											
P12.0	tcpwm[0].line[4]:3	tcpwm[1].line[4]:1	csd.csd_tx:85	csd.csd_tx_n:85				smif.spi_data4	scb[6].uart_rx:0	scb[6].i2c_scl:0	scb[6].spi_mosi:0			peri.tr_io_input[24]:0		sdhc[1].card_emmc_reset_n			

(table continues...)

Table 8 (continued) Multiple alternate functions

Port/Pin	ACT #0	ACT #1	ACT #2	ACT #3	DS #2	DS #3	ACT #4	ACT #5	ACT #6	ACT #7	ACT #8	ACT #9	ACT #10	ACT #12	ACT #13	ACT #14	ACT #15	DS #5	DS #6
P12.1	tcpwm[0].line_compl[4]:3	tcpwm[1].line_compl[4]:1	csd.csd_tx:86	csd.csd_tx_n:86				smif.spi_data5	scb[6].uart_tx:0	scb[6].i2c_sda:0	scb[6].spi_miso:0			peri.tr_io_input[25]:0		sdhc[1].card_detect_n			
P12.2	tcpwm[0].line[5]:3	tcpwm[1].line[5]:1	csd.csd_tx:87	csd.csd_tx_n:87				smif.spi_data6	scb[6].uart_rts:0		scb[6].spi_clk:0					sdhc[1].card_mech_write_prot			
P12.3	tcpwm[0].line_compl[5]:3	tcpwm[1].line_compl[5]:1	csd.csd_tx:88	csd.csd_tx_n:88				smif.spi_data7	scb[6].uart_cts:0		scb[6].spi_select0:0					sdhc[1].led_ctrl			
P12.4	tcpwm[0].line[6]:3	tcpwm[1].line[6]:1	csd.csd_tx:89	csd.csd_tx_n:89				smif.spi_select3			scb[6].spi_select1:0	audioss[0].pdm_clk:1				sdhc[1].card_cmd			
P12.5	tcpwm[0].line_compl[6]:3	tcpwm[1].line_compl[6]:1	csd.csd_tx:90	csd.csd_tx_n:90							scb[6].spi_select2:0	audioss[0].pdm_data:1				sdhc[1].clk_card			
P12.6	tcpwm[0].line[7]:3	tcpwm[1].line[7]:1	csd.csd_tx:91	csd.csd_tx_n:91							scb[6].spi_select3:0					sdhc[1].card_if_pwr_en			

(table continues...)

Table 8 (continued) Multiple alternate functions

Port/Pin	ACT #0	ACT #1	ACT #2	ACT #3	DS #2	DS #3	ACT #4	ACT #5	ACT #6	ACT #7	ACT #8	ACT #9	ACT #10	ACT #12	ACT #13	ACT #14	ACT #15	DS #5	DS #6
P12.7	tcpwm[0].line_compl[7]:3	tcpwm[1].line_compl[7]:1	csd.csd_tx:92	csd.csd_tx_n:92												sdhc[1].io_volt_sel			
P13.0	tcpwm[0].line[0]:4	tcpwm[1].line[8]:1	csd.csd_tx:93	csd.csd_tx_n:93					scb[6].uart_rx:1	scb[6].i2c_scl:1	scb[6].spi_mosi:1		audioss[1].clk_i2s_if:0	peri.tr_io_input[26]:0		sdhc[1].card_dat_3to0[0]			
P13.1	tcpwm[0].line_compl[0]:4	tcpwm[1].line_compl[8]:1	csd.csd_tx:94	csd.csd_tx_n:94					scb[6].uart_tx:1	scb[6].i2c_sda:1	scb[6].spi_miso:1		audioss[1].tx_sck:0	peri.tr_io_input[27]:0		sdhc[1].card_dat_3to0[1]			
P13.2	tcpwm[0].line[1]:4	tcpwm[1].line[9]:1	csd.csd_tx:95	csd.csd_tx_n:95					scb[6].uart_rts:1		scb[6].spi_clk:1		audioss[1].tx_ws:0			sdhc[1].card_dat_3to0[2]			
P13.3	tcpwm[0].line_compl[1]:4	tcpwm[1].line_compl[9]:1	csd.csd_tx:96	csd.csd_tx_n:96					scb[6].uart_cts:1		scb[6].spi_select0:1		audioss[1].tx_sdo:0			sdhc[1].card_dat_3to0[3]			
P13.4	tcpwm[0].line[2]:4	tcpwm[1].line[10]:1	csd.csd_tx:97	csd.csd_tx_n:97					scb[12].uart_rx:0	scb[12].i2c_scl:0	scb[6].spi_select1:1		audioss[1].rx_sck:0			sdhc[1].card_dat_7to4[0]			

(table continues...)

Table 8 (continued) Multiple alternate functions

Port/Pin	ACT #0	ACT #1	ACT #2	ACT #3	DS #2	DS #3	ACT #4	ACT #5	ACT #6	ACT #7	ACT #8	ACT #9	ACT #10	ACT #12	ACT #13	ACT #14	ACT #15	DS #5	DS #6
P13.5	tcpwm[0].line_compl[2]:4	tcpwm[1].line_compl[10]:1	csd.csd_tx:98	csd.csd_tx_n:98					scb[12].uart_tx:0	scb[12].i2c_sda:0	scb[6].spi_select2:1		audioss[1].rx_ws:0			sdhc[1].card_dat_7to4[1]			
P13.6	tcpwm[0].line[3]:4	tcpwm[1].line[11]:1	csd.csd_tx:99	csd.csd_tx_n:99					scb[12].uart_rts:0		scb[6].spi_select3:1		audioss[1].rx_sdi:0			sdhc[1].card_dat_7to4[2]			
P13.7	tcpwm[0].line_compl[3]:4	tcpwm[1].line_compl[11]:1	csd.csd_tx:100	csd.csd_tx_n:100					scb[12].uart_cts:0							sdhc[1].card_dat_7to4[3]			

4 Pinouts

Analog and Smart I/O alternate port pin functionality is provided in Table 9.

Table 9 Port Pin Analog, Digital, and Smart I/O functions

Port/Pin	Functions
Analog	
P0.0	wco_in
P0.1	wco_out
P5.6	lpcomp.inp_comp0
P5.7	lpcomp.inn_comp0
P6.2	lpcomp.inp_comp1
P6.3	lpcomp.inn_comp1
P6.6	swd_data
P6.7	swd_clk
P7.2	csd.csh_tank
P7.3	csd.vref_ext
P7.7	csd.shield
P9.7	aref_ext_vref
P10.0	sarmux_pads[0]
P10.1	sarmux_pads[1]
P10.2	sarmux_pads[2]
P10.3	sarmux_pads[3]
P10.4	sarmux_pads[4]
P10.5	sarmux_pads[5]
P10.6	sarmux_pads[6]
P10.7	sarmux_pads[7]
P12.6	eco_in
P12.7	eco_out
Digital	
P0.4	pmic_wakeup_in hibernate_wakeup[1]
P1.4	hibernate_wakeup[0]
P0.5	pmic_wakeup_out
Smart I/O	
P8.0	smartio[8].io[0]
P8.1	smartio[8].io[1]
P8.2	smartio[8].io[2]
P8.3	smartio[8].io[3]
P8.4	smartio[8].io[4]

(table continues...)

Table 9 (continued) Port Pin Analog, Digital, and Smart I/O functions

Port/Pin	Functions
P8.5	smartio[8].io[5]
P8.6	smartio[8].io[6]
P8.7	smartio[8].io[7]
P9.0	smartio[9].io[0]
P9.1	smartio[9].io[1]
P9.2	smartio[9].io[2]
P9.3	smartio[9].io[3]
P9.4	smartio[9].io[4]
P9.5	smartio[9].io[5]
P9.6	smartio[9].io[6]
P9.7	smartio[9].io[7]

5 Power supply considerations

The following power system diagrams show typical connections for power pins for all supported packages and with and without usage of the buck regulator.

In these diagrams, the package pin is shown with the pin name, for example "V_{DDA}, A12". For V_{DDx} pins, the I/O port that is powered by that pin is also shown, for example "V_{DDD}, A1; I/O port P1".

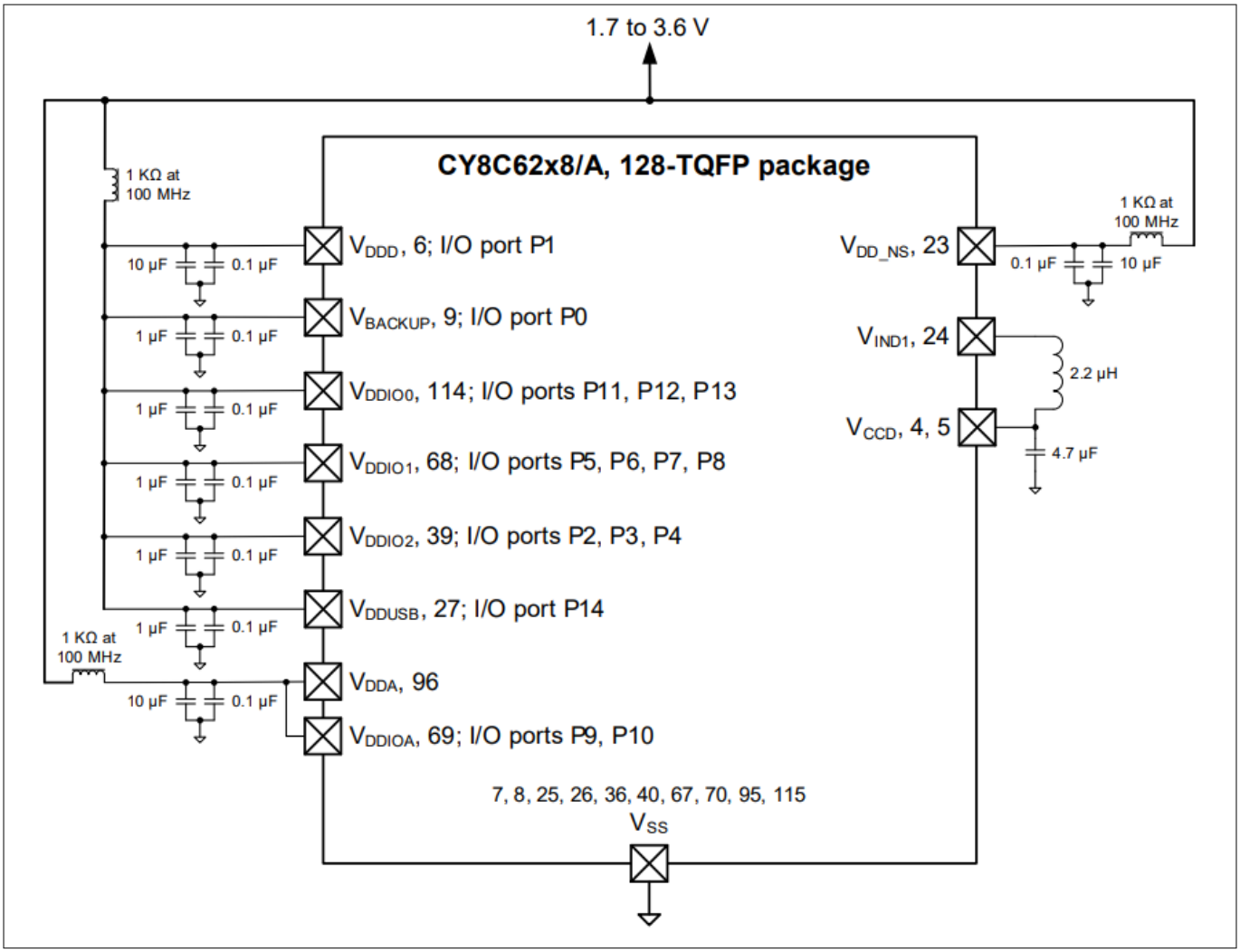

Figure 11 128-TQFP Power connection diagram

5 Power supply considerations

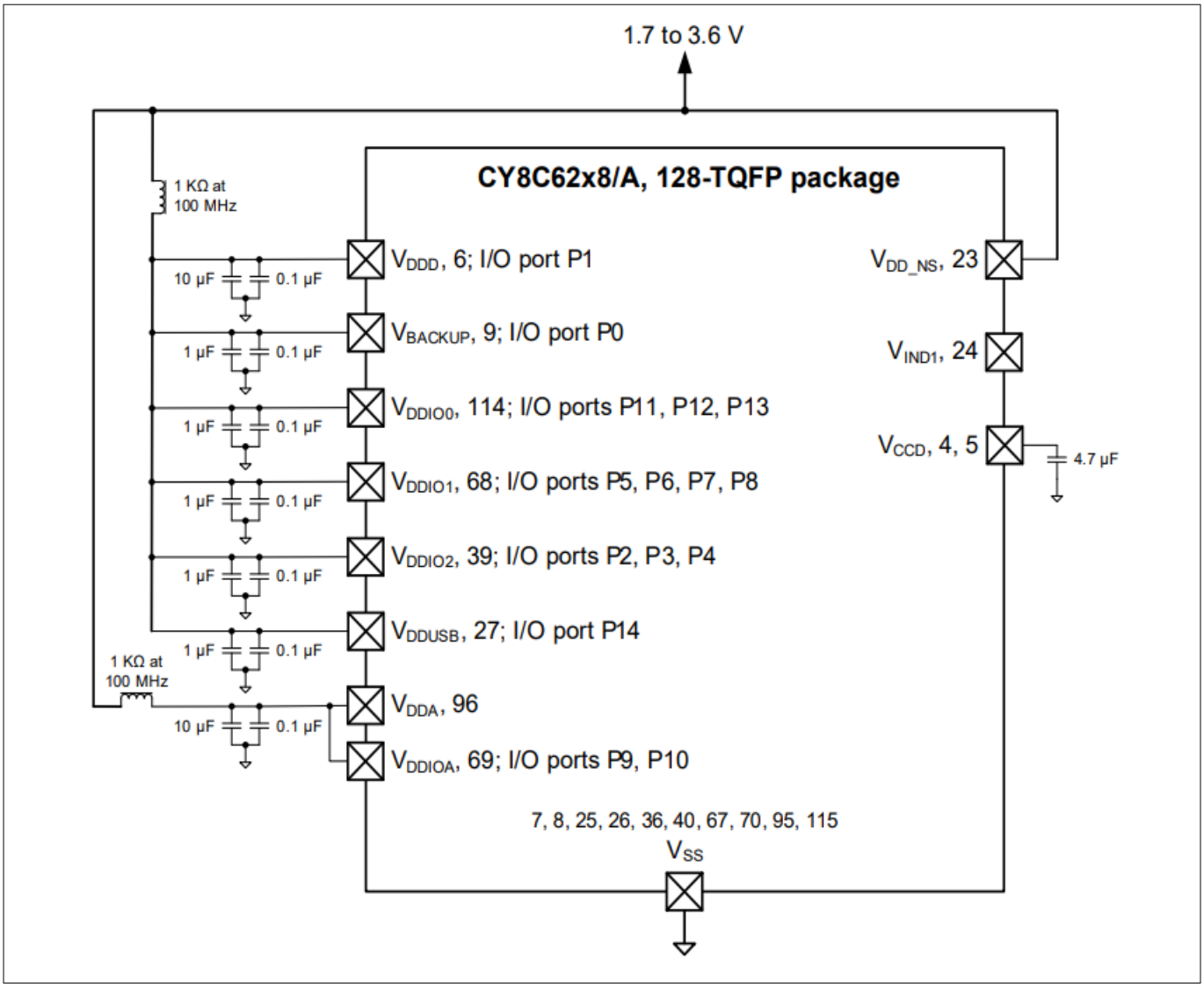

Figure 12 128-TQFP (No Buck) Power connection diagram

5 Power supply considerations

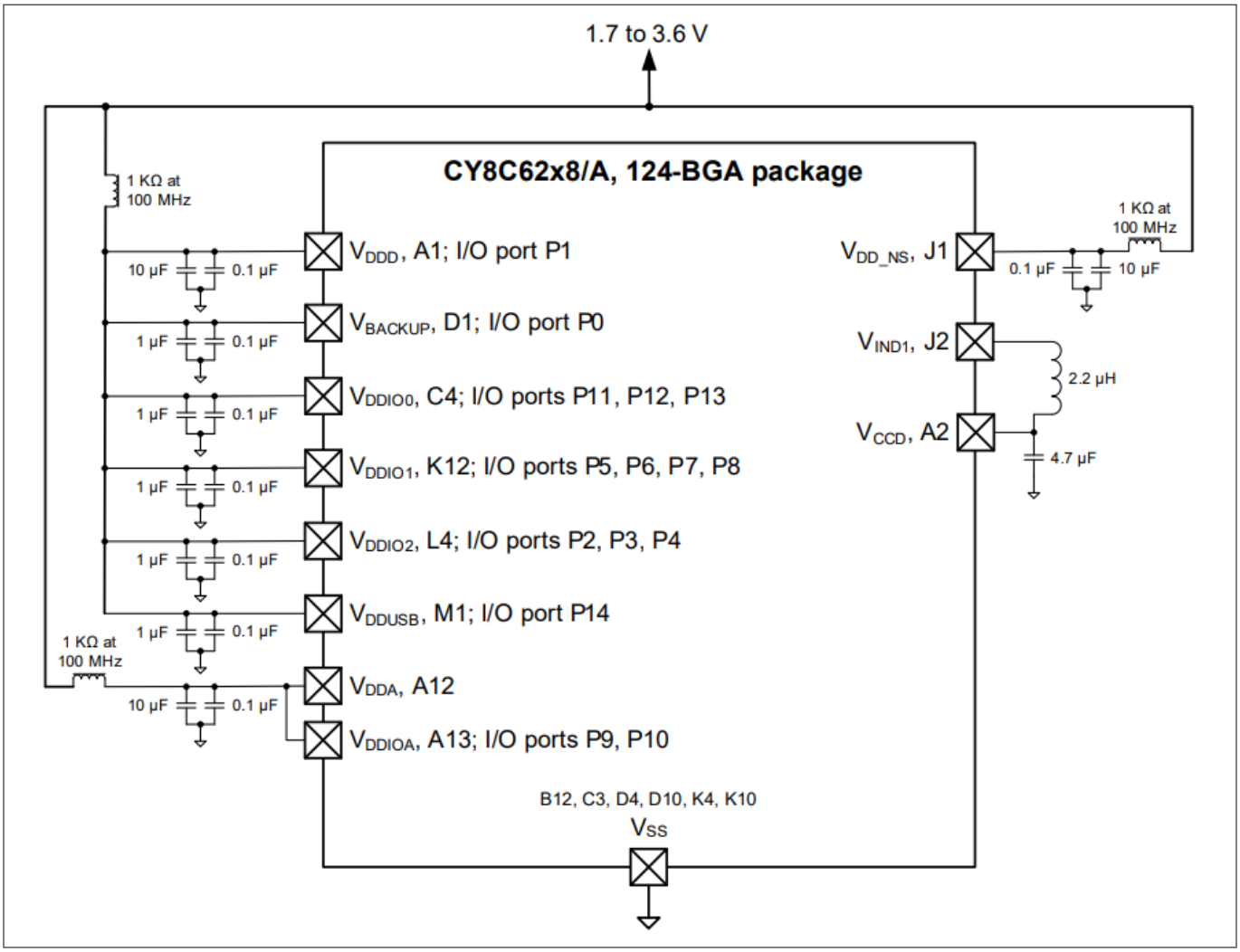

Figure 13 124-BGA Power connection diagram

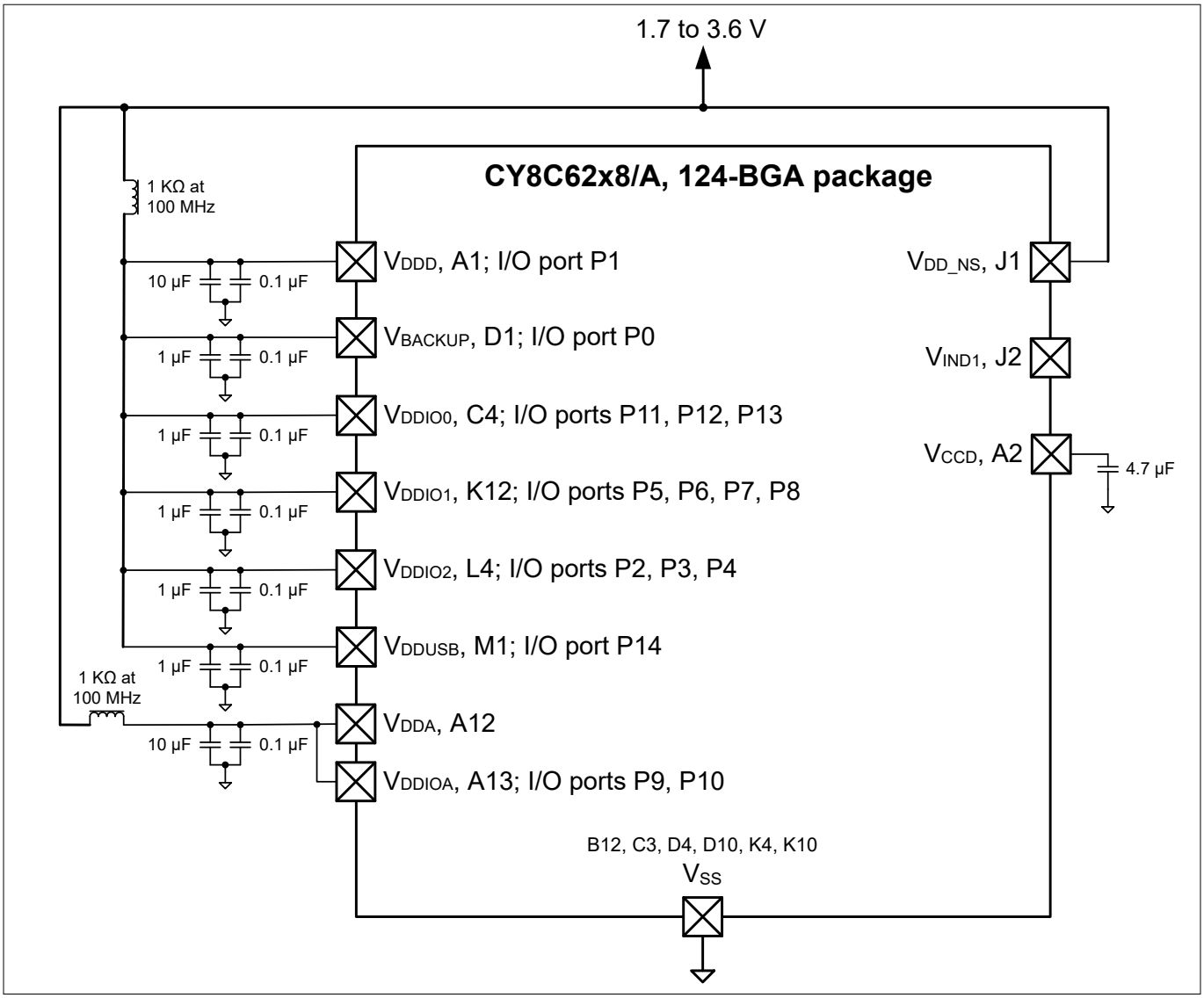

Figure 14 **124-BGA (No Buck) Power connection diagram**

5 Power supply considerations

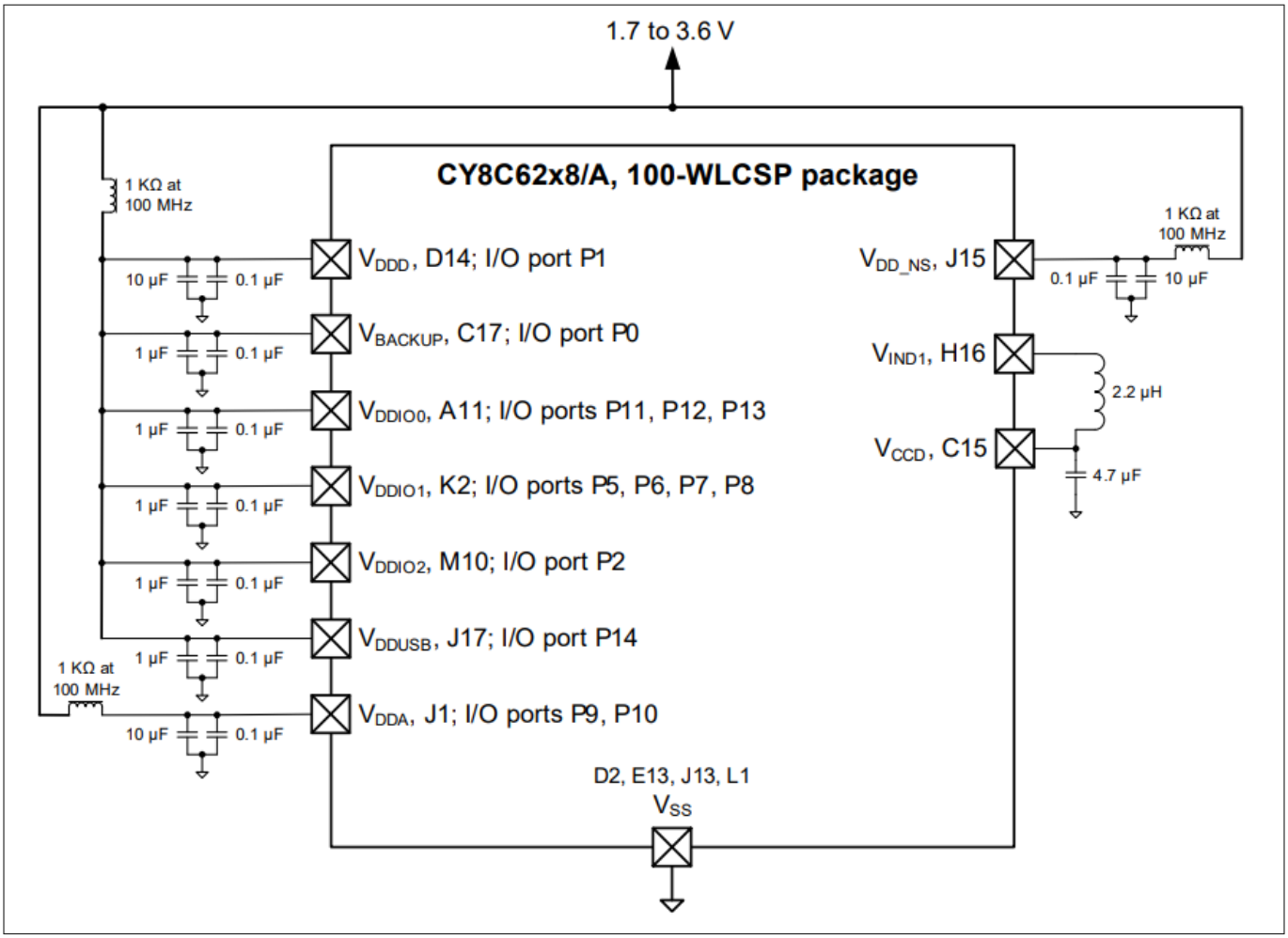

Figure 15 100-WLCSP Power connection diagram

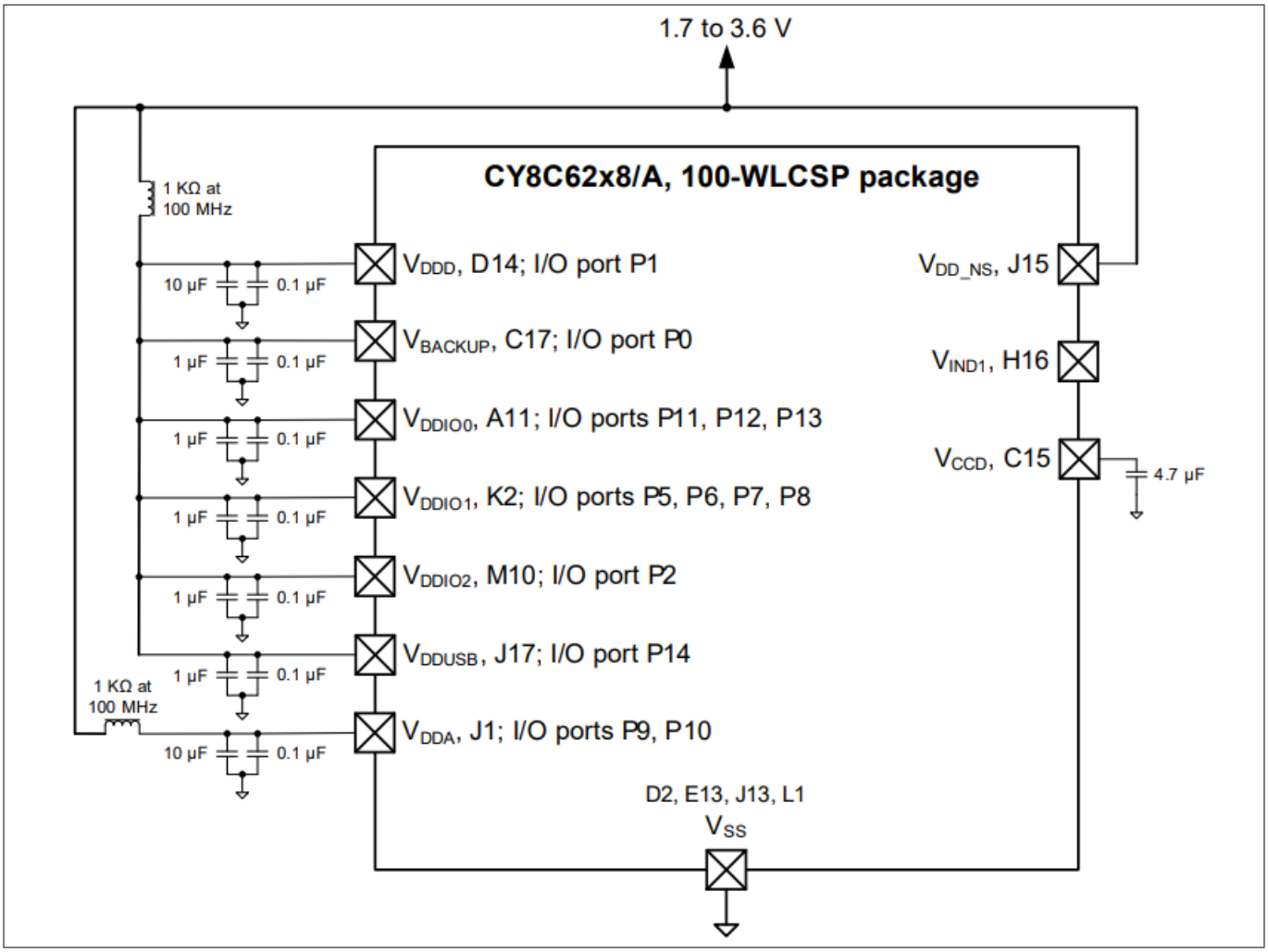

Figure 16 100-WLCSP (No Buck) Power connection diagram

In the QFN package, all internal grounds are routed to the metal pad (epad) in the package. This pad must be grounded on the PCB.

5 Power supply considerations

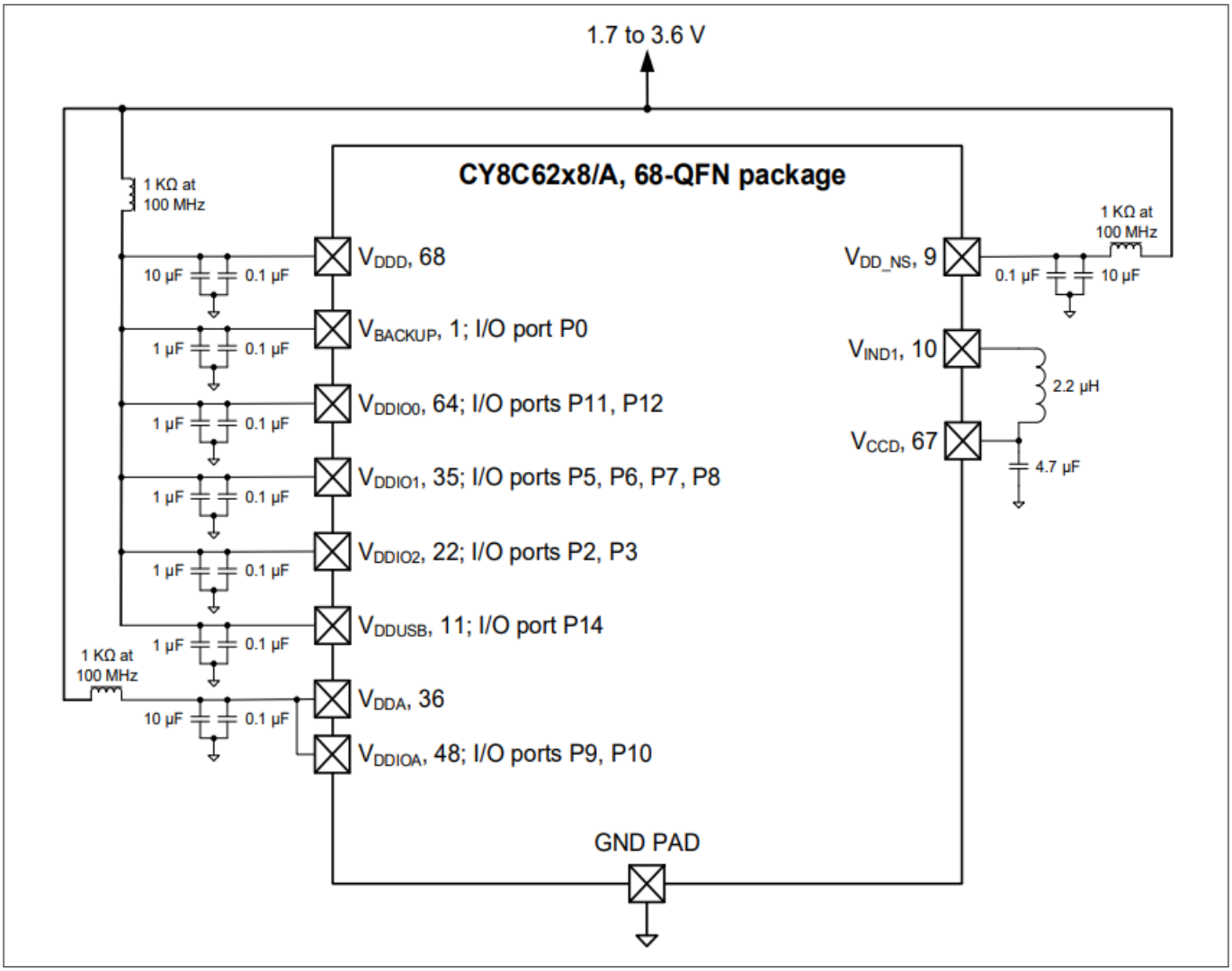

Figure 17 68-QFN Power connection diagram

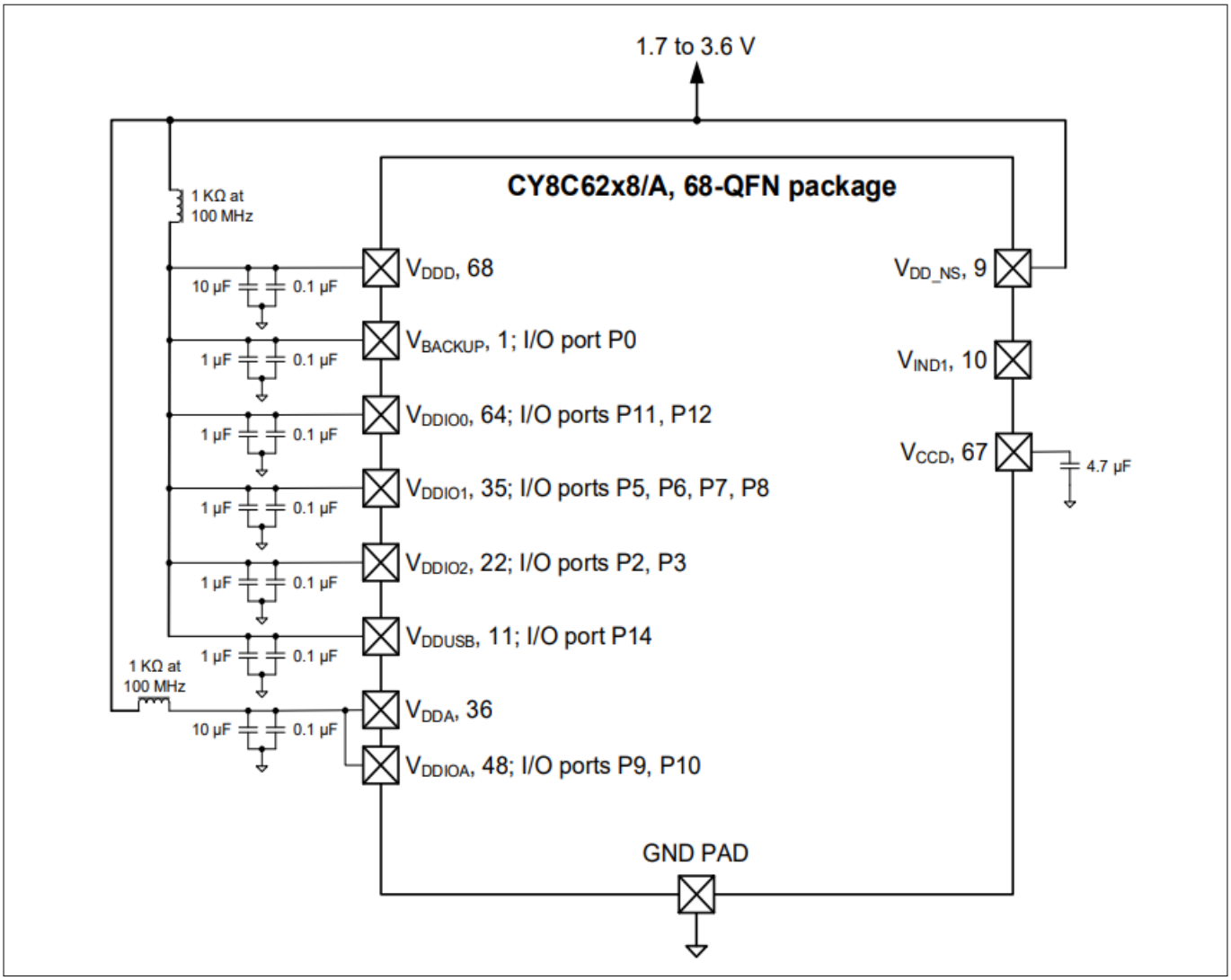

Figure 18 68-QFN (No Buck) Power connection diagram

There are as many as eight V_{DDx} supply pins, depending on the package, and multiple VSS ground pins. The power pins are:

- V_{DDD}: the main digital supply. It powers the low dropout (LDO) regulators and I/O port 1
- V_{CCD}: the main LDO output. It requires a 4.7-µF capacitor for regulation. The LDO can be turned off when V_{CCD} is driven from the switching regulator (see below). For more information, see the power system block diagram in the device reference manual
- V_{DDA}: the supply for the analog peripherals. Voltage must be applied to this pin for correct device initialization and boot up
- V_{DDIOA}: the supply for I/O ports 9 and 10. If it is present in the device package, it must be connected to V_{DDA}
- V_{DDIO0}: the supply for I/O ports 11, 12, and 13
- V_{DDIO1}: the supply for I/O ports 5, 6, 7, and 8
- V_{DDIO2}: the supply for I/O ports 2, 3, and 4. Some of the ports are not available depending on package
- V_{BACKUP}: the supply for the backup domain, which includes the 32-kHz WCO and the RTC. It can be a separate supply as low as 1.4 V, for battery or supercapacitor backup, as Figure 19 shows, otherwise it is connected to V_{DDD}. It powers I/O port 0

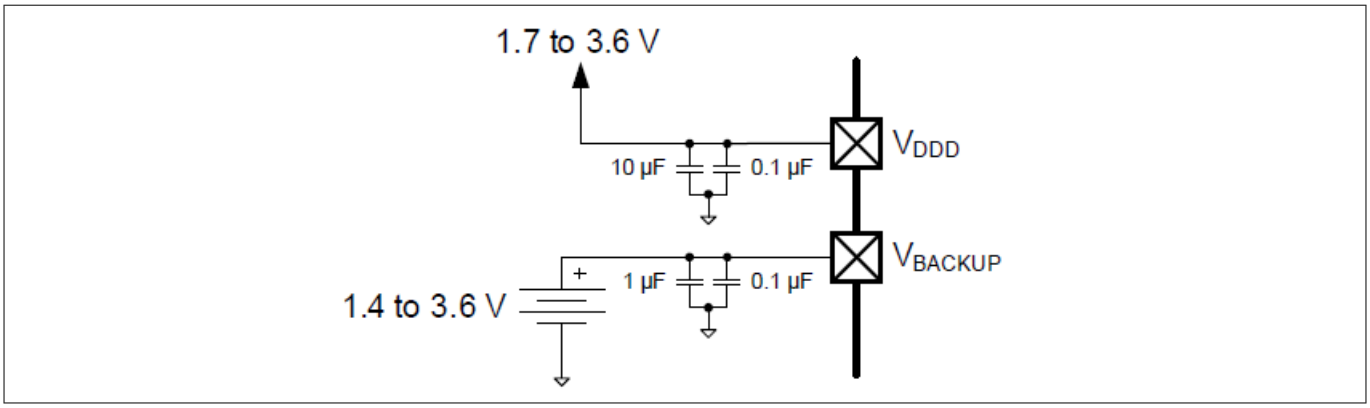

Figure 19 Separate battery connection to V_{BACKUP}

- V_{DDUSB}: the supply for the USB peripheral and the USBDP and USBDM pins. It must be 2.85 V to 3.6 V for USB operation. If USB is not used, it can be 1.7 V to 3.6 V, and the USB pins can be used as limited-capability GPIOs on I/O port 14

Table 10 shows a summary of the I/O port supplies:

Table 10 I/O port supplies

Port	Supply	Alternate supply
0	V_{BACKUP}	V_{DDD}
1	V_{DDD}	–
2, 3, 4	V_{DDIO2}	–
5, 6, 7, 8	V_{DDIO1}	–
9, 10	V_{DDIOA}	V_{DDA}
11, 12, 13	V_{DDIO0}	–
14	V_{DDUSB}	–

***Note**: If the USB pins are not used, connect V_{DDUSB} to ground and leave the P14.0/USBDP and P14.1/USBDM pins unconnected.*

Voltage must be applied to the V_{DDD} pin, and the V_{DDA} pin as noted above, for correct device initialization and operation. If an I/O port is not being used, applying voltage to the corresponding V_{DDx} pin is optional.

- V_{SS}: ground pins for the above supplies. All ground pins should be connected together to a common ground. In addition to the LDO regulator, a switching regulator is included. The regulator pins are:
- V_{DD_NS}: the regulator supply
- V_{IND1}: the regulator output. It is typically used to drive V_{CCD} through an inductor

The V_{DD} power pins are not connected on chip. They can be connected off chip, in one or more separate nets. If separate power nets are used, they can be isolated from noise from the other nets using optional ferrite beads, as indicated in the diagrams.

No external load should be placed on V_{CCD}, or V_{IND1}, whether or not these pins are used.

There are no power pin sequencing requirements; power supplies may be brought up in any order. The power management system holds the device in reset until all power pins are at the voltage levels required for proper operation.

5 Power supply considerations

***Note**: If a battery is installed on the PCB first, V_{DDD} must be cycled for at least 50 µs. This prevents premature drain of the battery during product manufacture and storage.*

Bypass capacitors must be connected to a common ground from the V_{DDx} and other pins, as indicated in the diagrams. Typical practice for systems in this frequency range is to use a 10-µF or 1-µF capacitor in parallel with a smaller capacitor (0.1 µF, for example). Note that these are simply rules of thumb and that, for critical applications, the PCB layout, lead inductance, and bypass capacitor parasitic should be simulated for optimal bypassing.

All capacitors and inductors should be ±20% or better. The recommended inductor value is 2.2 µH ±20% (for example, TDK MLP2012H2R2MT0S1).

It is good practice to check the datasheets for your bypass capacitors, specifically the working voltage and the DC bias specifications. With some capacitors, the actual capacitance can decrease considerably when the applied voltage is a significant percentage of the rated working voltage.

For more information on pad layout, refer to PSOC™ 6 CAD libraries.

6 Electrical specifications

All specifications are valid for –40°C ≤ T_A ≤ 85°C and for 1.71 V to 3.6 V except where noted.

6.1 Absolute maximum ratings

Table 11 Absolute maximum ratings[1)]

Spec ID#	Parameter	Description	Min	Typ	Max	Unit	Details/conditions
SID1	V_{DD_ABS}	Analog or digital supply relative to V_{SS} (V_{SSD} = V_{SSA})	–0.5	–	4	V	-
SID2	V_{CCD_ABS}	Direct digital core voltage input relative to VSSD	–0.5	–	1.2	V	-
SID3	V_{GPIO_ABS}	GPIO voltage; V_{DDD} or V_{DDA}	–0.5	–	V_{DD} + 0.5	V	-
SID4	I_{GPIO_ABS}	Current per GPIO	–25	–	25	mA	-
SID5	$I_{GPIO_injection}$	GPIO injection current per pin	–0.5	–	0.5	mA	-
SID3A	ESD_HBM	Electrostatic discharge Human Body Model	2200	–	–	V	-
SID4A	ESD_CDM	Electrostatic discharge Charged Device Model	500	–	–	V	-
SID5A	LU	Pin current for latchup-free operation	–100	–	100	mA	-

1) Usage above the absolute maximum conditions listed in Table 11 may cause permanent damage to the device. Exposure to absolute maximum conditions for extended periods of time may affect device reliability.

The maximum storage temperature is 150°C in compliance with JEDEC Standard JESD22-A103, High Temperature Storage Life. When used below absolute maximum conditions but above normal operating conditions, the device may not operate to specification.

6.2 Device-level specifications

Table 14 provides detailed specifications of CPU current. Table 12 summarizes these specifications, for rapid review of CPU currents under common conditions. Note that the max frequency for CM4 is 150 MHz, and for CM0+ is 100 MHz. IMO and FLL are used to generate the CPU clocks; FLL is not used when the CPU clock frequency is 8 MHz.

Table 12 CPU current specifications summary

Condition	Range	Typ range	Max range
LP Mode, V_{DDD} = 3.3 V, V_{CCD} = 1.1 V, with buck regulator			
CM4 active, CM0+ sleep	Across CPUs clock ranges: 8 MHz to 150/100 MHz; Dhrystone with flash cache enabled	0.9 mA–7.35 mA	2 mA–9.5 mA
CM0+ active, CM4 sleep		0.8 mA–4.4 mA	2 mA–5.8 mA
CM4 sleep, CM0+ sleep		0.7 mA–1.55 mA	1.3 mA–2.2 mA
CM0+ sleep, CM4 off		0.7 mA–1.3 mA	1.3 mA–2 mA
Minimum regulator current mode	Across CM4/CM0+ CPU active/sleep modes	0.64 mA–0.85 mA	1.2 mA–1.5 mA

(table continues...)

Table 12 (continued) CPU current specifications summary

Condition	Range	Typ range	Max range
ULP Mode, V_{DDD} = 3.3 V, V_{CCD} = 0.9 V, with buck regulator			
CM4 active, CM0+ sleep	Across CPUs clock ranges: 8 MHz to 50/25 MHz; Dhrystone with flash cache enabled	0.65 mA–1.85 mA	1.2 mA–2.5 mA
CM0+ active, CM4 sleep		0.55 mA–1 mA	0.95 mA–1.5 mA
CM4 sleep, CM0+ sleep		0.45 mA–0.85 mA	0.9 mA–1.2 mA
CM0+ sleep, CM4 off		0.41 mA–0.62 mA	0.72 mA–1.2 mA
Minimum regulator current mode	Across CM4/CM0+ CPU active/sleep modes	0.4 mA–0.55 mA	1 µA–1 mA
Deep Sleep	Across SRAM retention	7 µA–9 µA	–
Hibernate	Across V_{DDD}	300 nA–2100 nA	–

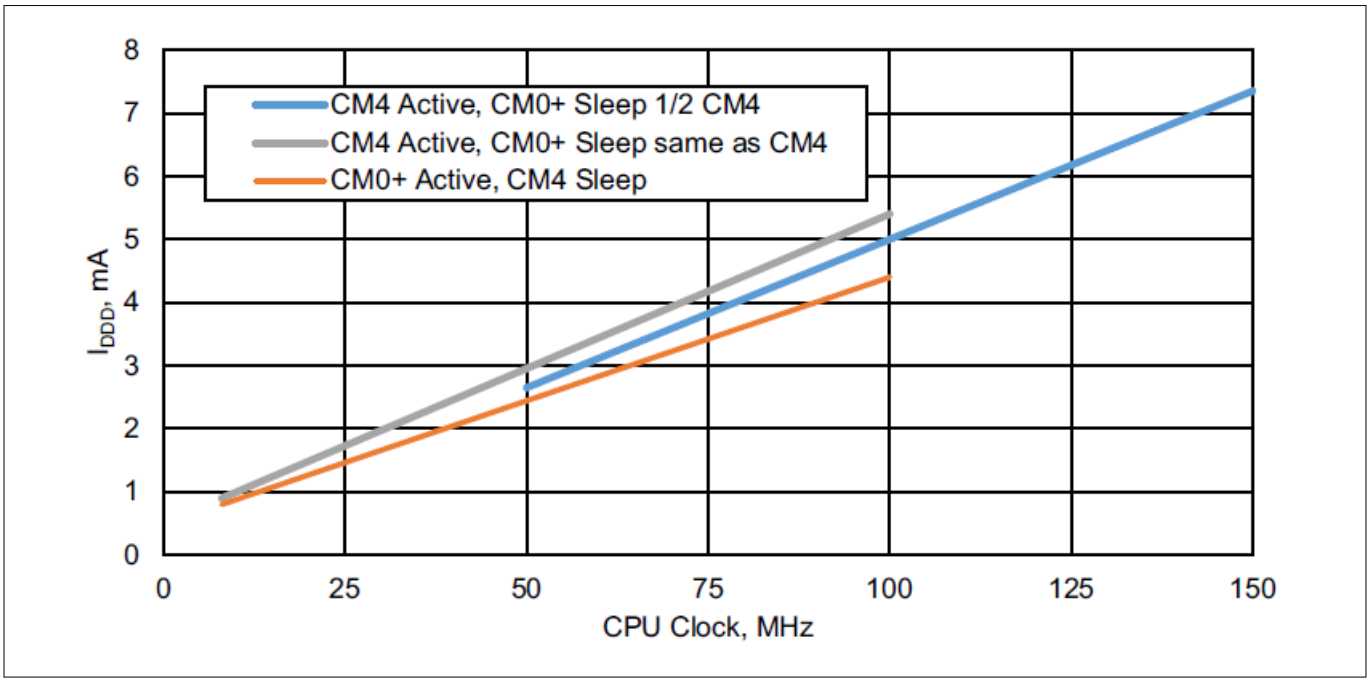

Figure 20 Typical device currents vs. CPU frequency; system low power (LP) mode

6.2.1 Power supplies

Table 13 Power supply DC specifications

Spec ID#	Parameter	Description	Min	Typ	Max	Unit	Details/conditions
SID6	V_{DDD}	Internal regulator and Port 1 GPIO supply	1.7	–	3.6	V	–
SID7	V_{DDA}	Analog power supply voltage. Shorted to V_{DDIOA} on PCB.	1.7	–	3.6	V	Internally unregulated supply

(table continues...)

Table 13 (continued) Power supply DC specifications

Spec ID#	Parameter	Description	Min	Typ	Max	Unit	Details/conditions
SID7A	V_{DDIO1}	GPIO supply for ports 5 to 8 when present	1.7	–	3.6	V	Must be ≥ V_{DDA} if the CAPSENSE™ (CSD) block is used in the application
SID7B	V_{DDIO0}	GPIO supply for ports 11 to 13 when present	1.7	–	3.6	V	–
SID7E	V_{DDIO0}	Supply for eFuse Programming	2.38	2.5	2.62	V	–
SID7C	V_{DDIO2}	GPIO supply for ports 2 to 4 when present	1.7	–	3.6	V	–
SID7D	V_{DDIOA}	GPIO supply for ports 9 and 10 when present. Must be connected to V_{DDA} on PCB.	1.7	–	3.6	V	–
SID7F	V_{DDUSB}	Supply for port 14 (USB or GPIO) when present	1.7	–	3.6	V	Min supply is 2.85 V for USB
SID6B	V_{BACKUP}	Backup power and GPIO Port 0 supply when present	1.7	–	3.6	V	Min is 1.4 V when V_{DDD} is removed
SID8	V_{CCD1}	Output voltage (for core logic bypass)	–	1.1	–	V	System LP mode
SID9	V_{CCD2}	Output voltage (for core logic bypass)	–	0.9	–		ULP mode. Valid for –20°C to 85°C.
SID10	C_{EFC}	External regulator voltage (V_{CCD}) bypass	3.8	4.7	5.6	µF	X5R ceramic or better. Value for 0.8 V to 1.2 V.
SID11	C_{EXC}	Power supply decoupling capacitor	–	10	–	µF	X5R ceramic or better

6.2.2 CPU current and transition times

Table 14 CPU current and transition times

Spec ID#	Parameter	Description	Min	Typ	Max	Unit	Details/conditions
LP range power specifications (for V_{CCD} = 1.1 V with Buck and LDO)							
Cortex®-M4. Active Mode							
Execute with Cache Disabled (Flash)							
SIDF1	IDD1	Execute from Flash; CM4 Active 50 MHz, CM0+ Sleep 25 MHz. With IMO & FLL. While(1).	–	2.85	4.5	mA	V_{DDD} = 3.3 V, Buck ON, Max at 60°C
				4.1	5.1		V_{DDD} = 1.8 V, Buck ON, Max at 60°C
				6.8	10		V_{DDD} = 1.8 to 3.3 V, LDO, max at 60°C
SIDF2	IDD2	Execute from Flash; CM4 Active 8 MHz, CM0+ Sleep 8 MHz. With IMO. While(1).	–	0.9	2.1	mA	V_{DDD} = 3.3 V, Buck ON, Max at 60°C
				1.2	2.2		V_{DDD} = 1.8 V, Buck ON, Max at 60°C
				2.4	5.5		V_{DDD} = 1.8 to 3.3 V, LDO, Max at 60°C
Execute with Cache Enabled							
SIDC1	IDD3	Execute from cache; CM4 Active 150 MHz, CM0+ Sleep 75 MHz. IMO & PLL. Dhrystone.	–	7.35	9.5	mA	V_{DDD} = 3.3 V, Buck ON, Max at 60°C
				12	14.5		V_{DDD} = 1.8 V, Buck ON, Max at 60°C
				18	21		V_{DDD} = 1.8 to 3.3 V, LDO, Max at 60°C
SIDC2	IDD4	Execute from cache; CM4 Active 100 MHz, CM0+ Sleep 100 MHz. IMO & FLL. Dhrystone.	–	5.4	6.8	mA	V_{DDD} = 3.3 V, Buck ON, Max at 60°C
				8.95	10		V_{DDD} = 1.8 V, Buck ON, Max at 60°C
				13.8	17		V_{DDD} = 1.8 to 3.3 V, LDO, Max at 60°C
SIDC3	IDD5	Execute from cache; CM4 Active 50 MHz, CM0+ Sleep 25 MHz. IMO & FLL. Dhrystone.	–	2.65	3.8	mA	V_{DDD} = 3.3 V, Buck ON, Max at 60°C
				4.25	5.3		V_{DDD} = 1.8 V, Buck ON, Max at 60°C
				6.8	10		V_{DDD} = 1.8 to 3.3 V, LDO, Max at 60°C

(table continues...)

Table 14 (continued) CPU current and transition times

Spec ID#	Parameter	Description	Min	Typ	Max	Unit	Details/conditions
LP range power specifications (for V_{CCD} = 1.1 V with Buck and LDO)							
Cortex®-M4. Active Mode							
Execute with Cache Disabled (Flash)							
SIDC4	IDD6	Execute from cache; CM4 Active 8 MHz, CM0+ Sleep 8 MHz. IMO. Dhrystone.	–	0.9	2	mA	V_{DDD} = 3.3 V, Buck ON, Max at 60°C
				1.27	2.1		V_{DDD} = 1.8 V, Buck ON, Max at 60°C
				2.3	5.5		V_{DDD} = 1.8 to 3.3 V, LDO, Max at 60°C
Cortex®-M0+. Active Mode							
Execute with Cache Disabled (Flash)							
SIDF3	IDD7	Execute from Flash; CM4 Off, CM0+ Active 50 MHz. With IMO & FLL. While (1).	–	2.6	4	mA	V_{DDD} = 3.3 V, Buck ON, Max at 60°C
				3.9	5		V_{DDD} = 1.8 V, Buck ON, Max at 60°C
				6.5	10		V_{DDD} = 1.8 to 3.3 V, LDO, Max at 60°C
SIDF4	IDD8	Execute from Flash; CM4 Off, CM0+ Active 8 MHz. With IMO. While (1).	–	0.8	1.5	mA	V_{DDD} = 3.3 V, Buck ON, Max at 60°C
				1.1	2		V_{DDD} = 1.8 V, Buck ON, Max at 60°C
				2.2	5.5		V_{DDD} = 1.8 to 3.3 V, LDO, Max at 60°C
Execute with Cache Enabled							
SIDC5	IDD9	Execute from cache; CM4 Off, CM0+ Active 100 MHz. With IMO & FLL. Dhrystone.	–	4.40	5.8	mA	V_{DDD} = 3.3 V, Buck ON, Max at 60°C
				7.35	8.5		V_{DDD} = 1.8 V, Buck ON, Max at 60°C
				11.5	14.5		V_{DDD} = 1.8 to 3.3 V, LDO, Max at 60°C
SIDC6	IDD10	Execute from cache; CM4 Off, CM0+ Active 8 MHz. With IMO. Dhrystone.	–	0.8	2	mA	V_{DDD} = 3.3 V, Buck ON, Max at 60°C
				1.2	2		V_{DDD} = 1.8 V, Buck ON, Max at 60°C
				2.2	5.5		V_{DDD} = 1.8 to 3.3 V, LDO, Max at 60°C
Cortex®-M4. Sleep Mode							

(table continues...)

Table 14 (continued) CPU current and transition times

Spec ID#	Parameter	Description	Min	Typ	Max	Unit	Details/conditions
LP range power specifications (for V_{CCD} = 1.1 V with Buck and LDO)							
Cortex®-M4. Active Mode							
Execute with Cache Disabled (Flash)							
SIDS1	IDD11	CM4 Sleep 100 MHz, CM0+ Sleep 25 MHz. With IMO & FLL.	–	1.55	2.2	mA	V_{DDD} = 3.3 V, Buck ON, Max at 60°C
				2.4	3.5		V_{DDD} = 1.8 V, Buck ON, Max at 60°C
				4.2	7.2		V_{DDD} = 1.8 to 3.3 V, LDO, Max at 60°C
SIDS2	IDD12	CM4 Sleep 50 MHz, CM0+ Sleep 25 MHz. With IMO & FLL.	–	1.2	2	mA	V_{DDD} = 3.3 V, Buck ON, Max at 60°C
				1.75	2.7		V_{DDD} = 1.8 V, Buck ON, Max at 60°C
				3.2	6.3		V_{DDD} = 1.8 to 3.3 V, LDO, Max at 60°C
SIDS3	IDD13	CM4 Sleep 8 MHz, CM0+ Sleep 8 MHz. With IMO.	–	0.7	1.3	mA	V_{DDD} = 3.3 V, Buck ON, Max at 60°C
				0.96	1.8		V_{DDD} = 1.8 V, Buck ON, Max at 60°C
				1.7	5		V_{DDD} = 1.8 to 3.3 V, LDO, Max at 60°C
Cortex®-M0+. Sleep Mode							
SIDS4	IDD14	CM4 Off, CM0+ Sleep 50 MHz. With IMO & FLL.	–	1.3	2	mA	V_{DDD} = 3.3 V, Buck ON, Max at 60°C
				2.05	3		V_{DDD} = 1.8 V, Buck ON, Max at 60°C
				3.6	6.8		V_{DDD} = 1.8 to 3.3 V, LDO, Max at 60°C
SIDS5	IDD15	CM4 Off, CM0+ Sleep 8 MHz. With IMO.	–	0.7	1.3	mA	V_{DDD} = 3.3 V, Buck ON, Max at 60°C
				0.95	1.5		V_{DDD} = 1.8 V, Buck ON, Max at 60°C
				1.7	5		V_{DDD} = 1.8 to 3.3 V, LDO, Max at 60°C
Cortex®-M4. Minimum Regulator Current Mode							

(table continues...)

Table 14 (continued) CPU current and transition times

Spec ID#	Parameter	Description	Min	Typ	Max	Unit	Details/conditions
LP range power specifications (for V_{CCD} = 1.1 V with Buck and LDO)							
Cortex®-M4. Active Mode							
Execute with Cache Disabled (Flash)							
SIDLPA1	IDD16	Execute from Flash; CM4 Active 8 MHz, CM0+ Sleep 8 MHz. With IMO. While (1).	–	0.85	1.8	mA	V_{DDD} = 3.3 V, Buck ON, Max at 60°C
				1.18	2		V_{DDD} = 1.8 V, Buck ON, Max at 60°C
				2.2	5.5		V_{DDD} = 1.8 to 3.3 V, LDO, Max at 60°C
SIDLPA2	IDD17	Execute from cache; CM4 Active 8 MHz, CM0+ Sleep 8 MHz. With IMO. Dhrystone.	–	0.9	1.5	mA	V_{DDD} = 3.3 V, Buck ON, Max at 60°C
				1.27	2		V_{DDD} = 1.8 V, Buck ON, Max at 60°C
				2.2	5.5		V_{DDD} = 1.8 to 3.3 V, LDO, Max at 60°C
Cortex®-M0+. Minimum Regulator Current Mode							
SIDLPA3	IDD18	Execute from Flash; CM4 Off, CM0+ Active 8 MHz. With IMO. While (1).	–	0.8	1.5	mA	V_{DDD} = 3.3 V, Buck ON, Max at 60°C
				1.14	2		V_{DDD} = 1.8 V, Buck ON, Max at 60°C
				2.1	5.5		V_{DDD} = 1.8 to 3.3 V, LDO, Max at 60°C
SIDLPA4	IDD19	Execute from Cache; CM4 Off, CM0+ Active 8 MHz. With IMO. Dhrystone.	–	0.8	1.5	mA	V_{DDD} = 3.3 V, Buck ON, Max at 60°C
				1.15	2		V_{DDD} = 1.8 V, Buck ON, Max at 60°C
				2.1	5.5		V_{DDD} = 1.8 to 3.3 V, LDO, Max at 60°C
Cortex®-M4. Minimum Regulator Current Mode							
SIDLPS1	IDD20	CM4 Sleep 8 MHz, CM0+ Sleep 8 MHz. With IMO.	–	0.65	1.2	mA	V_{DDD} = 3.3 V, Buck ON, Max at 60°C
				0.95	1.7		V_{DDD} = 1.8 V, Buck ON, Max at 60°C
				1.6	5		V_{DDD} = 1.8 to 3.3 V, LDO, Max at 60°C
Cortex®-M0+. Minimum Regulator Current Mode							

(table continues...)

Table 14 (continued) CPU current and transition times

Spec ID#	Parameter	Description	Min	Typ	Max	Unit	Details/conditions
LP range power specifications (for V_{CCD} = 1.1 V with Buck and LDO)							
Cortex®-M4. Active Mode							
Execute with Cache Disabled (Flash)							
SIDLPS3	IDD22	CM4 Off, CM0+ Sleep 8 MHz. With IMO.	–	0.64	1.2	mA	V_{DDD} = 3.3 V, Buck ON, Max at 60°C
				0.93	1.7		V_{DDD} = 1.8 V, Buck ON, Max at 60°C
				1.6	5		V_{DDD} = 1.8 to 3.3 V, LDO, Max at 60°C
ULP range power specifications (for V_{CCD} = 0.9 V using the Buck). ULP mode is valid from –20°C to +85°C.							
Cortex®-M4. Active Mode							
Execute with Cache Disabled (Flash)							
SIDF5	IDD3	Execute from Flash; CM4 Active 50 MHz, CM0+ Sleep 25 MHz. With IMO & FLL. While(1).	–	2.15	2.9	mA	V_{DDD} = 3.3 V, Buck ON, Max at 60°C
				2.85	3.4		V_{DDD} = 1.8 V, Buck ON, Max at 60°C
SIDF6	IDD4	Execute from Flash; CM4 Active 8 MHz, CM0+ Sleep 8 MHz. With IMO. While (1).	–	0.65	1.2	mA	V_{DDD} = 3.3 V, Buck ON, Max at 60°C
				0.8	1.4		V_{DDD} = 1.8 V, Buck ON, Max at 60°C
Execute with Cache Enabled							
SIDC8	IDD10	Execute from cache; CM4 Active 50 MHz, CM0+ Sleep 25 MHz. With IMO & FLL. Dhrystone.	–	1.85	2.5	mA	V_{DDD} = 3.3 V, Buck ON, Max at 60°C
				2.9	3.5		V_{DDD} = 1.8 V, Buck ON, Max at 60°C
SIDC9	IDD11	Execute from cache; CM4 Active 8 MHz, CM0+ Sleep 8 MHz. With IMO. Dhrystone.	–	0.65	1.2	mA	V_{DDD} = 3.3 V, Buck ON, Max at 60°C
				0.8	1.3		V_{DDD} = 1.8 V, Buck ON, Max at 60°C
Cortex®-M0+. Active Mode							
Execute with Cache Disabled (Flash)							
SIDF7	IDD16	Execute from Flash; CM4 Off, CM0+ Active 25 MHz. With IMO & FLL. Write(1).	–	1.1	1.5	mA	V_{DDD} = 3.3 V, Buck ON, Max at 60°C
				1.55	2.2		V_{DDD} = 1.8 V, Buck ON, Max at 60°C

(table continues...)

Table 14 (continued) CPU current and transition times

Spec ID#	Parameter	Description	Min	Typ	Max	Unit	Details/conditions
LP range power specifications (for V_{CCD} = 1.1 V with Buck and LDO)							
Cortex®-M4. Active Mode							
Execute with Cache Disabled (Flash)							
SIDF8	IDD17	Execute from Flash; CM4 Off, CM0+ Active 8 MHz. With IMO. While(1).	–	0.55	1.2	mA	V_{DDD} = 3.3 V, Buck ON, Max at 60°C
				0.73	1.4		V_{DDD} = 1.8 V, Buck ON, Max at 60°C
Execute with Cache Enabled							
SIDC10	IDD18	Execute from cache; CM4 Off, CM0+ Active 25 MHz. With IMO & FLL. Dhrystone.	–	1	1.5	mA	V_{DDD} = 3.3 V, Buck ON, Max at 60°C
				1.5	2		V_{DDD} = 1.8 V, Buck ON, Max at 60°C
SIDC11	IDD19	Execute from cache; CM4 Off, CM0+ Active 8 MHz. With IMO. Dhrystone.	–	0.55	0.95	mA	V_{DDD} = 3.3 V, Buck ON, Max at 60°C
				0.73	1.3		V_{DDD} = 1.8 V, Buck ON, Max at 60°C
Cortex®-M4. Sleep Mode							
SIDS7	IDD21	CM4 Sleep 50 MHz, CM0+ Sleep 25 MHz. With IMO & FLL.	–	0.85	1.2	mA	V_{DDD} = 3.3 V, Buck ON, Max at 60°C
				1.2	1.8		V_{DDD} = 1.8 V, Buck ON, Max at 60°C
SIDS8	IDD22	CM4 Sleep 8 MHz, CM0+ Sleep 8 MHz. With IMO.	–	0.45	0.9	mA	V_{DDD} = 3.3 V, Buck ON, Max at 60°C
				0.59	1		V_{DDD} = 1.8 V, Buck ON, Max at 60°C
Cortex®-M0+. Sleep Mode							
SIDS9	IDD23	CM4 Off, CM0+ Sleep 25 MHz. With IMO & FLL.	–	0.62	1.2	mA	V_{DDD} = 3.3 V, Buck ON, Max at 60°C
				0.88	1.5		V_{DDD} = 1.8 V, Buck ON, Max at 60°C
SIDS10	IDD24	CM4 Off, CM0+ Sleep 8 MHz. With IMO.	–	0.41	0.72	mA	V_{DDD} = 3.3 V, Buck ON, Max at 60°C
				0.58	1.3		V_{DDD} = 1.8 V, Buck ON, Max at 60°C
Cortex®-M4. Minimum Regulator Current Mode							

(table continues...)

Table 14 (continued) CPU current and transition times

Spec ID#	Parameter	Description	Min	Typ	Max	Unit	Details/conditions
LP range power specifications (for V_{CCD} = 1.1 V with Buck and LDO)							
Cortex®-M4. Active Mode							
Execute with Cache Disabled (Flash)							
SIDLPA5	IDD25	Execute from Flash. CM4 Active 8 MHz, CM0+ Sleep 8 MHz. With IMO. While(1).	–	0.65	1.2	mA	V_{DDD} = 3.3 V, Buck ON, Max at 60°C
				0.8	1.4		V_{DDD} = 1.8 V, Buck ON, Max at 60°C
SIDLPA6	IDD26	Execute from cache. CM4 Active 8 MHz, CM0+ Sleep 8 MHz. With IMO. Dhrystone.	–	0.6	1	mA	V_{DDD} = 3.3 V, Buck ON, Max at 60°C
				0.78	1.4		V_{DDD} = 1.8 V, Buck ON, Max at 60°C
Cortex®-M0+. Minimum Regulator Current Mode							
SIDLPA7	IDD27	Execute from Flash. CM4 Off, CM0+ Active 8 MHz. With IMO. While (1).	–	0.55	1	mA	V_{DDD} = 3.3 V, Buck ON, Max at 60°C
				0.75	1.4		V_{DDD} = 1.8 V, Buck ON, Max at 60°C
SIDLPA8	IDD28	Execute from cache. CM4 Off, CM0+ Active 8 MHz. With IMO. Dhrystone.	–	0.5	1	mA	V_{DDD} = 3.3 V, Buck ON, Max at 60°C
				0.7	1.4		V_{DDD} = 1.8 V, Buck ON, Max at 60°C
Cortex®-M4. Minimum Regulator Current mode							
SIDLPS5	IDD29	CM4 Sleep 8 MHz, CM0 Sleep 8 MHz. With IMO.	–	0.45	1	mA	V_{DDD} = 3.3 V, Buck ON, Max at 60°C
				0.57	1.1		V_{DDD} = 1.8 V, Buck ON, Max at 60°C
Cortex®-M0+. Minimum regulator current mode							
SIDLPS7	IDD31	CM4 Off, CM0+ Sleep 8 MHz. With IMO.	–	0.4	1	mA	V_{DDD} = 3.3 V, Buck ON, Max at 60°C
				0.56	1.1		V_{DDD} = 1.8 V, Buck ON, Max at 60°C
Deep Sleep Mode							
SIDDS1	IDD33A	With internal Buck enabled and 64-KB SRAM retention.	–	7	–	µA	Max value is at 85°C
SIDDS1_B	IDD33A_B	With internal Buck enabled and 64-KB SRAM retention.	–	7	–	µA	Max value is at 60°C
SIDDS2	IDD33B	With internal Buck enabled and 256-KB SRAM retention.	–	9	–	µA	Max value is at 85°C

(table continues...)

Table 14 (continued) CPU current and transition times

Spec ID#	Parameter	Description	Min	Typ	Max	Unit	Details/conditions
LP range power specifications (for V_{CCD} = 1.1 V with Buck and LDO)							
Cortex®-M4. Active Mode							
Execute with Cache Disabled (Flash)							
SIDDS2_B	IDD33B_B	With internal Buck enabled and 256-KB SRAM retention.	–	9	–	µA	Max value is at 60°C
Hibernate mode							
SIDHIB1	I_{DD34}	V_{DDD} = 1.8 V	–	300	–	nA	No clocks running
SIDHIB2	I_{DD34A}	V_{DDD} = 3.3 V	–	2100	–	nA	No clocks running
Power mode transition times							
SID12	T_{LPACT_ACT}	Minimum Regulator Current to LP transition time.	–	–	35	µs	Including PLL lock time
SID13	T_{DS_LPACT}	Deep Sleep to LP transition time	–	–	21	µs	Guaranteed by design
SID14	T_{HIB_ACT}	Hibernate to LP transition time	–	1000	–	µs	Including PLL lock time

6.2.3 XRES

Table 15 XRES DC specifications

Spec ID#	Parameter	Description	Min	Typ	Max	Unit	Details/conditions
SID17	T_{XRES_IDD}	IDD when XRES asserted	–	300	500	nA	V_{DDD} = 1.8 V
SID17A	$T_{XRES_IDD_1}$	IDD when XRES asserted	–	2100	10500	nA	V_{DDD} = 3.3 V
SID77	V_{IH}	Input voltage HIGH threshold	0.7 × V_{DD}	–	–	V	CMOS input
SID78	V_{IL}	Input voltage LOW threshold	–	–	0.3 × V_{DD}	V	CMOS input
SID80	C_{IN}	Input capacitance	–	3	–	pF	–
SID81	$V_{HYSXRES}$	Input voltage hysteresis	–	100	–	mV	–
SID82	I_{DIODE}	Current through protection diode to V_{DD}/V_{SS}	–	–	100	µA	–

Table 16 XRES AC specifications

Spec ID#	Parameter	Description	Min	Typ	Max	Unit	Details/conditions
SID15	T_{XRES_ACT}	POR or XRES release to Active transition time	–	1000	–	µs	Normal mode, 50-MHz CM0+.
SID16	T_{XRES_PW}	XRES pulse width	5	–	–	µs	–

6.2.4 GPIO

Table 17 GPIO DC specifications

Spec ID#	Parameter	Description	Min	Typ	Max	Unit	Details/conditions
SID57	V_{IH}	Input voltage HIGH threshold	0.7 × V_{DD}	–	–	V	CMOS Input
SID57A	I_{IHS}	Input current when Pad > V_{DDIO} for OVT inputs	–	–	10	µA	Per I^2C Spec
SID58	V_{IL}	Input voltage LOW threshold	–	–	0.3 × V_{DD}	V	CMOS Input
SID241	V_{IH}	LVTTL input, V_{DD} < 2.7 V	0.7 × V_{DD}	–	–	V	–
SID242	V_{IL}	LVTTL input, V_{DD} < 2.7 V	–	–	0.3 × V_{DD}	V	–
SID243	V_{IH}	LVTTL input, V_{DD} ≥ 2.7 V	2.0	–	–	V	–
SID244	V_{IL}	LVTTL input, V_{DD} ≥ 2.7 V	–	–	0.8	V	–
SID59	V_{OH}	Output voltage HIGH level	V_{DD} – 0.5	–	–	V	I_{OH} = 8 mA
SID62A	V_{OL}	Output voltage LOW level	–	–	0.4	V	I_{OL} = 8 mA
SID63	R_{PULLUP}	Pull-up resistor	3.5	5.6	8.5	kΩ	–
SID64	$R_{PULLDOWN}$	Pull-down resistor	3.5	5.6	8.5	kΩ	–
SID65	I_{IL}	Input leakage current (absolute value)	–	–	2	nA	25°C, V_{DD} = 3.0 V
SID66	C_{IN}	Input capacitance	–	–	5	pF	–
SID67	V_{HYSTTL}	Input hysteresis LVTTL, V_{DD} > 2.7 V	100	0	–	mV	–
SID68	$V_{HYSCMOS}$	Input hysteresis CMOS	0.05 × V_{DD}	–	–	mV	–
SID69	I_{DIODE}	Current through protection diode to V_{DD}/V_{SS}	–	–	100	µA	–
SID69A	I_{TOT_GPIO}	Maximum total source or sink chip current	–	–	200	mA	–

Table 18 GPIO AC specifications

Spec ID#	Parameter	Description	Min	Typ	Max	Unit	Details/conditions
SID70	T_{RISEF}	Rise time in Fast Strong Mode. 10% to 90% of V_{DD}.	–	–	2.5	ns	Cload = 15 pF, 8-mA drive strength
SID71	T_{FALLF}	Fall time in Fast Strong Mode. 10% to 90% of V_{DD}.	–	–	2.5	ns	Cload = 15 pF, 8-mA drive strength
SID72	T_{RISES_1}	Rise time in Slow Strong Mode. 10% to 90% of V_{DD}.	52	–	142	ns	Cload = 15 pF, 8-mA drive strength, V_{DD} ≤ 2.7 V

(table continues...)

Table 18 (continued) GPIO AC specifications

Spec ID#	Parameter	Description	Min	Typ	Max	Unit	Details/conditions
SID72A	T_{RISES_2}	Rise time in Slow Strong Mode. 10% to 90% of V_{DD}.	48	–	102	ns	Cload = 15 pF, 8-mA drive strength, 2.7 V < V_{DD} ≤ 3.6 V
SID73	T_{FALLS_1}	Fall time in Slow Strong Mode. 10% to 90% of V_{DD}.	44	–	211	ns	Cload = 15 pF, 8-mA drive strength, V_{DD} ≤ 2.7 V
SID73A	T_{FALLS_2}	Fall time in Slow Strong Mode. 10% to 90% of V_{DD}.	42	–	93	ns	Cload = 15 pF, 8-mA drive strength, 2.7 V < V_{DD} ≤ 3.6 V
SID73G	T_{FALL_I2C}	Fall time (30% to 70% of V_{DD}) in Slow Strong mode.	20 × V_{DDIO} / 5.5	–	250	ns	Cload = 10 pF to 400 pF, 8-mA drive strength
SID74	$F_{GPIOUT1}$	GPIO Fout. Fast Strong mode.	–	–	100	MHz	90/10%, 15-pF load, 60/40 duty cycle
SID75	$F_{GPIOUT2}$	GPIO Fout; Slow Strong mode.	–	–	1.5	MHz	90/10%, 15-pF load, 60/40 duty cycle
SID76	$F_{GPIOUT3}$	GPIO Fout; Fast Strong mode.	–	–	100	MHz	90/10%, 25-pF load, 60/40 duty cycle
SID245	$F_{GPIOUT4}$	GPIO Fout; Slow Strong mode.	–	–	1.3	MHz	90/10%, 25-pF load, 60/40 duty cycle
SID246	F_{GPIOIN}	GPIO input operating frequency; 1.71 V ≤ V_{DD} ≤ 3.6 V	–	–	100	MHz	90/10% V_{IO}

6.3 Analog peripherals

6.3.1 Low-power (LP) comparator

Table 19 LP comparator DC specifications

Spec ID#	Parameter	Description	Min	Typ	Max	Unit	Details/conditions
SID84	$V_{OFFSET1}$	Input offset voltage. Normal power mode.	–10	–	10	mV	–
SID85A	$V_{OFFSET2}$	Input offset voltage. Low-power mode.	–25	±12	25	mV	–
SID85B	$V_{OFFSET3}$	Input offset voltage. Ultra low-power mode.	–25	±12	25	mV	–

(table continues...)

Table 19 (continued) LP comparator DC specifications

Spec ID#	Parameter	Description	Min	Typ	Max	Unit	Details/conditions
SID86	V_{HYST1}	Hysteresis when enabled in Normal mode	–	–	60	mV	–
SID86A	V_{HYST2}	Hysteresis when enabled in Low-power mode	–	–	80	mV	–
SID87	V_{ICM1}	Input common mode voltage in Normal mode	0	–	V_{DDIO1} – 0.1	V	–
SID247	V_{ICM2}	Input common mode voltage in Low power mode	0	–	V_{DDIO1} – 0.1	V	–
SID247A	V_{ICM3}	Input common mode voltage in Ultra low power mode	0	–	V_{DDIO1} – 0.1	V	–
SID88	CMRR	Common mode rejection ratio in Normal power mode	50	–	–	dB	–
SID89	I_{CMP1}	Block current, Normal mode	–	–	150	µA	–
SID248	I_{CMP2}	Block current, Low-power mode	–	–	10	µA	–
SID259	I_{CMP3}	Block current in Ultra low-power mode	–	0.3	0.85	µA	–
SID90	ZCMP	DC input impedance of comparator	35	–	–	MΩ	–

Table 20 LP comparator AC specifications

Spec ID#	Parameter	Description	Min	Typ	Max	Unit	Details/conditions
SID91	T_{RESP1}	Response time, Normal mode, 100 mV overdrive	–	–	100	ns	–
SID258	T_{RESP2}	Response time, Low power mode, 100 mV overdrive	–	–	1000	ns	–
SID92	T_{RESP3}	Response time, Ultra-low power mode, 100 mV overdrive	–	–	20	µs	–
SID92E	T_CMP_EN1	Time from Enabling to operation	–	–	10	µs	Normal and low-power modes
SID92F	T_CMP_EN2	Time from Enabling to operation	–	–	50	µs	Ultra-low-power mode

6.3.2 Temperature sensor

Table 21 Temperature sensor specifications

Spec ID	Parameter	Description	Min	Typ	Max	Unit	Details/conditions
SID93	$T_{SENSACC}$	Temperature sensor accuracy	–5	±1	5	°C	–40°C to +85°C

6.3.3 Internal reference

Table 22 Internal reference specification

Spec ID	Parameter	Description	Min	Typ	Max	Unit	Details/conditions
SID93R	V_{REFBG}	–	1.188	1.2	1.212	V	–

6.3.4 SAR ADC

Table 23 12-bit SAR ADC DC specifications

Spec ID	Parameter	Description	Min	Typ	Max	Unit	Details/conditions
SID94	A_RES	SAR ADC resolution	–	–	12	bits	-
SID95	A_CHNLS_S	Number of channels - single-ended	–	–	16	–	8 full speed.
SID96	A-CHNKS_D	Number of channels - differential	–	–	8	–	Diff inputs use neighboring I/Os
SID97	A-MONO	Monotonicity	–	–	-	–	Yes.
SID98	A_GAINERR	Gain error	–	–	±0.2	%	With external reference.
SID99	A_OFFSET	Input offset voltage	–	–	2	mV	Measured with 1-V reference
SID100	A_ISAR_1	Current consumption at 1 Msps	–	–	1.05	mA	At 1 Msps. External reference mode
SID100A	A_ISAR_2	Current consumption at 1 Msps	–	–	1.3	mA	At 1 Msps. Internal reference mode
SID1002	A_ISAR_3	Current consumption at 2 Msps	–	–	1.65	mA	At 2 Msps. External reference mode
SID1003	A_ISAR_4	Current consumption at 2 Msps	–	–	2.15	mA	At 2 Msps. Internal reference mode
SID101	A_VINS	Input voltage range - single-ended	V_{SS}	–	V_{DDA}	V	-
SID102	A_VIND	Input voltage range - differential	V_{SS}	–	V_{DDA}	V	-
SID103	A_INRES	Input resistance	–	1	–	KΩ	-
SID104	A_INCAP	Input capacitance	–	5	–	pF	-

Table 24 12-bit SAR ADC AC specifications

Spec ID	Parameter	Description	Min	Typ	Max	Unit	Details/conditions
SID106	A_PSRR	Power supply rejection ratio	70	–	–	dB	-
SID107	A_CMRR	Common mode rejection ratio	66	–	–	dB	Measured at 1 V
SID1081	A_SAMP_1	Sample rate with external reference; With bypass cap	–	–	2	Msps	V_{DDA} 2.7 V–3.6 V
SID1082	A_SAMP_1	Sample rate with external reference; With bypass cap	–	–	1	Msps	V_{DDA} 1.7 V–3.6 V
SID108A1	A_SAMP_2	Sample rate with V_{DD} reference; No Bypass Cap	–	–	2	Msps	V_{DDA} 2.7 V–3.6 V
SID108A2	A_SAMP_2	Sample rate with V_{DD} Reference; No Bypass Cap	–	–	1	Msps	V_{DDA} 1.7 V–3.6 V
SID108B	A_SAMP_3	Sample rate with internal reference; With Bypass Cap.	–	–	1	Msps	-
SID108C	A_SAMP_4	Sample rate with internal reference; No Bypass Cap	–	–	200	ksps	-
SID109	A_SINAD	Signal-to-noise and distortion ratio (SINAD).	64	–	–	dB	Fin = 10 kHz
SID111A	A_INL	Integral non-linearity. Up to 1 Msps	–2	–	2	LSB	All reference modes
SID111B	A_INL	Integral non-linearity. 2 Msps.	–2.5	–	2.5	LSB	External reference or V_{DDA} Reference Mode, $V_{REF} \geq 2$ V. V_{DDA} = 2.7 V to 3.6 V
SID112A	A_DNL	Differential non-linearity. Up to 1 Msps	–1	–	1.5	LSB	All reference modes
SID112B	A_DNL	Differential non-linearity. 2 Msps.	–1	–	1.6	LSB	External reference or V_{DDA} Reference Mode, $V_{REF} \geq 2$ V. V_{DDA} = 2.7 V to 3.6 V
SID113	A_THD	Total harmonic distortion. 1 Msps.	–	–	-65	dB	F_{IN} = 10 kHz. V_{DDA} = 2.7 V–3.6 V

6.3.5 CSD

Table 25 Capacitive Sigma-Delta (CSD) specifications

Spec ID#	Parameter	Description	Min	Typ	Max	Unit	Details/conditions
CSD V2 specifications							

(table continues...)

Table 25 (continued) Capacitive Sigma-Delta (CSD) specifications

Spec ID#	Parameter	Description	Min	Typ	Max	Unit	Details/conditions
SYS.PER#3	V_{DD_RIPPLE}	Max allowed ripple on power supply, DC to 10 MHz	–	–	±50	mV	V_{DDA} > 2 V (with ripple), 25°C T_A, sensitivity = 0.1 pF
SYS.PER#16	$V_{DD_RIPPLE_1.8}$	Max allowed ripple on power supply, DC to 10 MHz	–	–	±25	mV	V_{DDA} > 1.75 V (with ripple), 25°C T_A, Parasitic capacitance (C_P) < 20 pF, Sensitivity ≥ 0.4 pF
SID.CSD.BLK	I_{CSD}	Maximum block current	–	–	4500	µA	–
SID.CSD#15	V_{REF}	Voltage reference for CSD and Comparator	0.6	1.2	V_{DDA} – 0.6	V	$V_{DDA} - V_{REF} \geq 0.6$ V
SID.CSD#15A	V_{REF_EXT}	External Voltage reference for CSD and Comparator	0.6	–	V_{DDA} – 0.6	V	$V_{DDA} - V_{REF} \geq 0.6$ V
SID.CSD#16	$I_{DAC1IDD}$	IDAC1 (7-bits) block current	–	–	1900	µA	–
SID.CSD#17	$I_{DAC2IDD}$	IDAC2 (7-bits) block current	–	–	1900	µA	–
SID308	V_{CSD}	Voltage range of operation	1.7	–	3.6	V	1.71 V–3.6 V
SID308A	$V_{COMPIDAC}$	Voltage compliance range of IDAC	0.6	–	V_{DDA} – 0.6	V	$V_{DDA} - V_{REF} \geq 0.6$ V
SID309	$I_{DAC1DNL}$	DNL	–1	–	1	LSB	–
SID310	$I_{DAC1INL}$	INL	–3	–	3	LSB	If V_{DDA} < 2 V then for LSB of 2.4 µA or less
SID311	$I_{DAC2DNL}$	DNL	–1	–	1	LSB	–
SID312	$I_{DAC2INL}$	INL	–3	–	3	LSB	If V_{DDA} < 2 V then for LSB of 2.4 µA or less

(table continues...)

Table 25 (continued) Capacitive Sigma-Delta (CSD) specifications

Spec ID#	Parameter	Description	Min	Typ	Max	Unit	Details/conditions
SNRC of the following is Ratio of counts of finger to noise. Measured typical devices at room temperature using Dual IDAC + PRS Clock Mode. Best performance is when using the PASS reference and the PLL.							
SID313_1A	SNRC_1	SRSS reference. IMO + FLL Clock Source. 0.1-pF sensitivity.	5	–	–	Ratio	9.5-pF max. capacitance
SID313_1B	SNRC_2	SRSS reference. IMO + FLL Clock Source. 0.3-pF sensitivity.	5	–	–	Ratio	31-pF max. capacitance
SID313_1C	SNRC_3	SRSS reference. IMO + FLL Clock Source. 0.6-pF sensitivity.	5	–	–	Ratio	61-pF max. capacitance
SID313_2A	SNRC_4	PASS reference. IMO + FLL Clock Source. 0.1-pF sensitivity.	5	–	–	Ratio	12-pF max. capacitance
SID313_2B	SNRC_5	PASS reference. IMO + FLL Clock Source. 0.3-pF sensitivity.	5	–	–	Ratio	47-pF max. capacitance
SID313_2C	SNRC_6	PASS reference. IMO + FLL Clock Source. 0.6-pF sensitivity.	5	–	–	Ratio	86-pF max. capacitance

(table continues...)

Table 25 (continued) Capacitive Sigma-Delta (CSD) specifications

Spec ID#	Parameter	Description	Min	Typ	Max	Unit	Details/conditions
SID313_3A	SNRC_7	PASS reference. IMO + PLL Clock Source. 0.1-pF sensitivity.	5	–	–	Ratio	25-pF max. capacitance
SID313_3B	SNRC_8	PASS reference. IMO + PLL Clock Source. 0.3-pF sensitivity.	5	–	–	Ratio	86-pF max. capacitance
SID313_3C	SNRC_9	PASS reference. IMO + PLL Clock Source. 0.6-pF sensitivity.	5	–	–	Ratio	168-pF Max. capacitance
SID314	$IDAC_{1CRT1}$	Output current of IDAC1 (7 bits) in low range	4.2	–	5.7	µA	LSB = 37.5-nA typ.
SID314A	$IDAC_{1CRT2}$	Output current of IDAC1 (7 bits) in medium range	33.7	–	45.6	µA	LSB = 300-nA typ.
SID314B	$IDAC_{1CRT3}$	Output current of IDAC1 (7 bits) in high range	270	–	365	µA	LSB = 2.4-µA typ.
SID314C	$IDAC_{1CRT12}$	Output current of IDAC1 (7 bits) in low range, 2X mode	8	–	11.4	µA	LSB = 37.5-nA typ. 2X output stage

(table continues...)

Table 25 (continued) Capacitive Sigma-Delta (CSD) specifications

Spec ID#	Parameter	Description	Min	Typ	Max	Unit	Details/conditions
SID314D	$IDAC_{1CRT22}$	Output current of IDAC1 (7 bits) in medium range, 2X mode	67	–	91	µA	LSB = 300-nA typ. 2X output stage
SID314E	$IDAC_{1CRT32}$	Output current of IDAC1 (7 bits) in high range, 2X mode. V_{DDA} > 2 V	540	–	730	µA	LSB = 2.4-µA typ. 2X output stage
SID315	$IDAC_{2CRT1}$	Output current of IDAC2 (7 bits) in low range	4.2	–	5.7	µA	LSB = 37.5-nA typ.
SID315A	$IDAC_{2CRT2}$	Output current of IDAC2 (7 bits) in medium range	33.7	–	45.6	µA	LSB = 300-nA typ.
SID315B	$IDAC_{2CRT3}$	Output current of IDAC2 (7 bits) in high range	270	–	365	µA	LSB = 2.4-µA typ.
SID315C	$IDAC_{2CRT12}$	Output current of IDAC2 (7 bits) in low range, 2X mode	8	–	11.4	µA	LSB = 37.5-nA typ. 2X output stage
SID315D	$IDAC_{2CRT22}$	Output current of IDAC2 (7 bits) in medium range, 2X mode	67	–	91	µA	LSB = 300-nA typ. 2X output stage

(table continues...)

Table 25 (continued) Capacitive Sigma-Delta (CSD) specifications

Spec ID#	Parameter	Description	Min	Typ	Max	Unit	Details/conditions
SID315E	$IDAC_{2CRT32}$	Output current of IDAC2 (7 bits) in high range, 2X mode. V_{DDA} > 2 V	540	–	730	µA	LSB = 2.4-µA typ. 2X output stage
SID315F	$IDAC_{3CRT13}$	Output current of IDAC in 8-bit mode in low range	8	–	11.4	µA	LSB = 37.5-nA typ.
SID315G	$IDAC_{3CRT23}$	Output current of IDAC in 8-bit mode in medium range	67	–	91	µA	LSB = 300-nA typ.
SID315H	$IDAC_{3CRT33}$	Output current of IDAC in 8-bit mode in high range. V_{DDA} > 2 V	540	–	730	µA	LSB = 2.4-µA typ.
SID320	$IDAC_{OFFSET}$	All zeroes input	–	–	1	LSB	Polarity set by source or sink
SID321	$IDAC_{GAIN}$	Full-scale error less offset	–	–	±15	%	LSB = 2.4-µA typ.
SID322	$IDAC_{MISMATCH1}$	Mismatch between IDAC1 and IDAC2 in Low mode	–	–	9.2	LSB	LSB = 37.5-nA typ.
SID322A	$IDAC_{MISMATCH2}$	Mismatch between IDAC1 and IDAC2 in Medium mode	–	–	6	LSB	LSB = 300-nA typ.

(table continues...)

Table 25 (continued) Capacitive Sigma-Delta (CSD) specifications

Spec ID#	Parameter	Description	Min	Typ	Max	Unit	Details/conditions
SID322B	$IDAC_{MISMATCH3}$	Mismatch between IDAC1 and IDAC2 in High mode	–	–	5.8	LSB	LSB = 2.4-µA typ.
SID323	$IDAC_{SET8}$	Settling time to 0.5 LSB for 8-bit IDAC	–	–	10	µs	Full-scale transition. No external load.
SID324	$IDAC_{SET7}$	Settling time to 0.5 LSB for 7-bit IDAC	–	–	10	µs	Full-scale transition. No external load.
SID325	CMOD	External modulator capacitor.	–	2.2	–	nF	5-V rating, X7R or NP0 cap.

Table 26 CSD ADC specifications

Spec ID#	Parameter	Description	Min	Typ	Max	Unit	Details/conditions
CSDv2 ADC specifications							
SIDA94	A_RES	Resolution	–	–	10	bits	Auto-zeroing is required every millisecond
SID95	A_CHNLS_S	Number of channels - single ended	–	–	–	16	–
SIDA97	A-MONO	Monotonicity	–	–	Yes	–	V_{REF} mode
SIDA98	A_GAINERR_VREF	Gain error	–	0.6	–	%	Reference source: SRSS (V_{REF} = 1.20 V, V_{DDA} < 2.2 V), (V_{REF} = 1.6 V, 2.2 V < V_{DDA} < 2.7 V), (V_{REF} = 2.13 V, V_{DDA} > 2.7 V)
SIDA98A	A_GAINERR_VDDA	Gain error	–	0.2	–	%	Reference source: SRSS (V_{REF} = 1.20 V, V_{DDA} < 2.2 V), (V_{REF} = 1.6 V, 2.2 V < V_{DDA} < 2.7 V), (V_{REF} = 2.13 V, V_{DDA} > 2.7 V)

(table continues...)

Table 26 (continued) CSD ADC specifications

Spec ID#	Parameter	Description	Min	Typ	Max	Unit	Details/conditions
SIDA99	A_OFFSET_VREF	Input offset voltage	–	0.5	–	LSB	After ADC calibration, Ref. Src = SRSS, (V_{REF} = 1.20 V, V_{DDA} < 2.2 V), (V_{REF} = 1.6 V, 2.2 V < V_{DDA} < 2.7 V), (V_{REF} = 2.13 V, V_{DDA} > 2.7 V)
SIDA99A	A_OFFSET_VDDA	Input offset voltage	–	0.5	–	LSB	After ADC calibration, Ref. Src = SRSS, (V_{REF} = 1.20 V, V_{DDA} < 2.2 V), (V_{REF} = 1.6 V, 2.2 V < V_{DDA} < 2.7 V), (V_{REF} = 2.13 V, V_{DDA} > 2.7 V)
SIDA100	A_ISAR_VREF	Current consumption	–	0.3	–	mA	CSD ADC Block current
SIDA100A	A_ISAR_VDDA	Current consumption	–	0.3	–	mA	CSD ADC Block current
SIDA101	A_VINS_VREF	Input voltage range - single ended	V_{SSA}	–	V_{REF}	V	(V_{REF} = 1.20 V, V_{DDA} < 2.2 V), (V_{REF} = 1.6 V, 2.2 V < V_{DDA} < 2.7 V), (V_{REF} = 2.13 V, V_{DDA} > 2.7 V)
SIDA101A	A_VINS_VDDA	Input voltage range - single ended	V_{SSA}	–	V_{DDA}	V	(V_{REF} = 1.20 V, V_{DDA} < 2.2 V), ($V_{RE\,F}$ = 1.6 V, 2.2 V < V_{DDA} < 2.7 V), (V_{REF} = 2.13 V, V_{DDA} > 2.7 V)
SIDA103	A_INRES	Input charging resistance	–	15	–	kΩ	–
SIDA104	A_INCAP	Input capacitance	–	41	–	pF	–
SIDA106	A_PSRR	Power supply rejection ratio (DC)	–	60	–	dB	–
SIDA107	A_TACQ	Sample acquisition time	–	10	–	µs	Measured with 50-Ω source impedance. 10 µs is default software driver acquisition time setting. Settling to within 0.05%.

(table continues...)

Table 26 (continued) CSD ADC specifications

Spec ID#	Parameter	Description	Min	Typ	Max	Unit	Details/conditions
SIDA108	A_CONV8	Conversion time for 8-bit resolution at conversion rate = Fhclk / (2"(N + 2)). Clock frequency = 50 MHz.	–	25	–	µs	Does not include acquisition time.
SIDA108A	A_CONV10	Conversion time for 10-bit resolution at conversion rate = Fhclk / (2"(N + 2)). Clock frequency = 50 MHz.	–	60	–	µs	Does not include acquisition time.
SIDA109	A_SND_VRE	Signal-to-noise and Distortion ratio (SINAD)	–	57	–	dB	Measured with 50-Ω source impedance.
SIDA109A	A_SND_VDDA	Signal-to-noise and Distortion ratio (SINAD)	–	52	–	dB	Measured with 50-Ω source impedance.
SIDA111	A_INL_VREF	Integral non-linearity. 11.6 ksps	–	–	2	LSB	Measured with 50-Ω source impedance.
SIDA111A	A_INL_VDDA	Integral non-linearity. 11.6 ksps	–	–	2	LSB	Measured with 50-Ω source impedance.
SIDA112	A_DNL_VREF	Differential non-linearity. 11.6 ksps	–	–	1	LSB	Measured with 50-Ω source impedance.
SIDA112A	A_DNL_VDDA	Differential non-linearity. 11.6 ksps	–	–	1	LSB	Measured with 50-Ω source impedance.

6.4 Digital Peripherals

6.4.1 Timer/Counter/PWM

Table 27 Timer/Counter/PWM (TCPWM) specifications

Spec ID#	Parameter	Description	Min	Typ	Max	Unit	Details/conditions
SID.TCPWM.1	I_{TCPWM1}	Block current consumption at 8 MHz	–	–	70	µA	All modes (TCPWM)
SID.TCPWM.2	I_{TCPWM2}	Block current consumption at 24 MHz	–	–	180	µA	All modes (TCPWM)
SID.TCPWM.2A	I_{TCPWM3}	Block current consumption at 50 MHz	–	–	270	µA	All modes (TCPWM)

(table continues...)

Table 27 (continued) Timer/Counter/PWM (TCPWM) specifications

Spec ID#	Parameter	Description	Min	Typ	Max	Unit	Details/conditions
SID.TCPWM.2B	I_{TCPWM4}	Block current consumption at 100 MHz	–	–	540	µA	All modes (TCPWM)
SID.TCPWM.3	$TCPWM_{FREQ}$	Operating frequency	–	–	100	MHz	Maximum = 100 MHz
SID.TCPWM.4	$TPWM_{ENEXT}$	Input trigger pulse width for all trigger events	2/Fc	–	–	ns	Trigger events can be Stop, Start, Reload, Count, Capture, or Kill depending on which mode of operation is selected. Fc is counter operating frequency.
SID.TCPWM.5	$TPWM_{EXT}$	Output trigger pulse widths	1.5/Fc	–	–	ns	Minimum possible width of Overflow, Underflow, and CC (Counter equals Compare value) trigger outputs. Fc is counter operating frequency.
SID.TCPWM.5A	TC_{RES}	Resolution of counter	1/Fc	–	–	ns	Minimum time between successive counts. Fc is counter operating frequency.
SID.TCPWM.5B	PWM_{RES}	PWM resolution	1/Fc	–	–	ns	Minimum pulse width of PWM output. Fc is counter operating frequency.
SID.TCPWM.5C	Q_{RES}	Quadrature inputs resolution	2/Fc	–	–	ns	Minimum pulse width between Quadrature phase inputs. Delays from pins should be similar. Fc is counter operating frequency.

6.4.2 Serial communication block (SCB)

Table 28 Serial communication block (SCB) specifications

Spec ID#	Parameter	Description	Min	Typ	Max	Unit	Details/conditions
Fixed I²C DC specifications							
SID149	I_{I2C1}	Block current consumption at 100 kHz	–	–	30	µA	–
SID150	I_{I2C2}	Block current consumption at 400 kHz	–	–	80	µA	–
SID151	I_{I2C3}	Block current consumption at 1 Mbps	–	–	180	µA	–
SID152	I_{I2C4}	I²C enabled in Deep Sleep mode	–	–	1.7	µA	At 60°C.
Fixed I²C AC specifications							
SID153	F_{I2C1}	Bit rate	–	–	1	Mbps	–
Fixed UART DC specifications							
SID160	I_{UART1}	Block current consumption at 100 kbps	–	–	30	µA	–
SID161	I_{UART2}	Block current consumption at 1000 kbps	–	–	180	µA	–
Fixed UART AC specifications							
SID162A	F_{UART1}	Bit Rate	–	–	3	Mbps	ULP Mode
SID162B	F_{UART2}		–	–	8	-	LP Mode
Fixed SPI DC specifications							
SID163	I_{SPI1}	Block current consumption at 1 Mbps	–	–	220	µA	–
SID164	I_{SPI2}	Block current consumption at 4 Mbps	–	–	340	µA	–
SID165	I_{SPI3}	Block current consumption at 8 Mbps	–	–	360	µA	–
SID165A	I_{SP14}	Block current consumption at 25 Mbps	–	–	800	µA	–
Fixed SPI AC specifications for LP Mode (1.1 V) unless noted otherwise.							
SID166	F_{SPI}	SPI Operating frequency externally clocked slave	–	–	25	MHz	12-MHz max for ULP (0.9 V) mode
SID166B	F_{SPI_EXT}	SPI operating frequency master (F_{scb} is SPI clock).	–	–	$F_{scb}/4$	MHz	F_{scb} max is 100 MHz in LP (1.1 V) mode, 25 MHz in ULP mode.
SID166A	F_{SPI_IC}	SPI slave internally clocked	–	–	15	MHz	5 MHz max for ULP (0.9 V) mode

(table continues...)

Table 28 (continued) Serial communication block (SCB) specifications

Spec ID#	Parameter	Description	Min	Typ	Max	Unit	Details/conditions
Fixed SPI Master mode AC specifications for LP Mode (1.1 V) unless noted otherwise.							
SID167	T_{DMO}	MOSI valid after SClock driving edge	–	–	12	ns	20-ns max for ULP (0.9 V) mode
SID168	T_{DSI}	MISO valid before SClock capturing edge	5	–	–	ns	Full clock, late MISO sampling
SID169	T_{HMO}	MOSI data hold time	0	–	–	ns	Referred to Slave capturing edge
Fixed SPI Slave mode AC specifications for LP Mode (1.1 V) unless noted otherwise.							
SID170	T_{DMI}	MOSI valid before Sclock capturing edge	5	–	–	ns	–
SID171A	T_{DSO_EXT}	MISO valid after Sclock driving edge in Ext. Clk. mode	–	–	20	ns	35-ns max. for ULP (0.9 V) mode
SID171	T_{DSO}	MISO valid after Sclock driving edge in Internally Clk. mode	–	–	$T_{DSO_EXT} + 3 \times T_{SCB}$	ns	T_{SCB} is SCB clock period.
SID171B	T_{DSO}	MISO Valid after Sclock driving edge in Internally Clk. Mode with median filter enabled.	–	–	$T_{DSO_EXT} + 4 \times T_{SCB}$	ns	T_{SCB} is SCB clock period.
SID172	T_{HSO}	Previous MISO data hold time	5	–	–	ns	–
SID172A	$TSSEL_{SCK1}$	SSEL Valid to first SCK valid edge	65	–	–	ns	–
SID172B	$TSSEL_{SCK2}$	SSEL Hold after Last SCK valid edge	65	–	–	ns	–

6.4.3 LCD specifications

Table 29 LCD direct drive DC specifications

Spec ID#	Parameter	Description	Min	Typ	Max	Unit	Details/conditions
SID155	C_{LCDCAP}	LCD capacitance per segment/common driver	–	500	5000	pF	–
SID156	LCD_{OFFSET}	Long-term segment offset	–	20	–	mV	–
SID157	I_{LCDOP1}	PWM Mode current. 3.3 V bias. 8 MHz IMO. 25°C.	–	0.6	–	mA	32 × 4 segments 50 Hz
SID158	I_{LCDOP2}	PWM Mode current. 3.3 V bias. 8 MHz IMO. 25°C.	–	0.5	–	mA	32 × 4 segments 50 Hz

Table 30 LCD direct drive AC specifications

Spec ID	Parameter	Description	Min	Typ	Max	Unit	Details/conditions
SID159	F_{LCD}	LCD frame rate	10	50	150	Hz	–

6.5 Memory

Table 31 Flash specifications[1)]

Spec ID	Parameter	Description	Min	Typ	Max	Unit	Details/conditions
Flash DC specifications							
SID173A	I_{PE}	Erase and program current	–	–	6	mA	–
Flash AC specifications							
SID174	$T_{ROWWRITE}$	Row write time (erase and program)	–	–	16	ms	Row = 512 bytes
SID175	$T_{ROWERASE}$	Row erase time	–	–	11	ms	–
SID176	$T_{ROWPROGRAM}$	Row program time after erase	–	–	5	ms	–
SID178	$T_{BULKERASE}$	Bulk erase time (2048 KB)	–	–	11	ms	–
SID179	$T_{SECTORERASE}$	Sector erase time (256 KB)	–	–	11	ms	512 rows per sector
SID178S	$T_{SSERIAE}$	Subsector erase time	–	–	11	ms	8 rows per subsector
SID179S	$T_{SSWRITE}$	Subsector write time; 1 erase plus 8 program times	–	–	51	ms	–
SID180S	T_{SWRITE}	Sector write time; 1 erase plus 512 program times	–	–	2.6	seconds	–
SID180	$T_{DEVPROG}$	Total device write time	–	–	30	seconds	–
SID181	F_{END}	Flash endurance	100K	–	–	cycles	–
SID182	F_{RET1}	Flash retention. $T_A \leq$ 25°C, 100K P/E cycles	10	–	–	years	–
SID182A	F_{RET2}	Flash retention. $T_A \leq$ 85°C, 10K P/E cycles	10	–	–	years	–
SID182B	F_{RET3}	Flash retention. $T_A \leq$ 55°C, 20K P/E cycles	20	–	–	years	–
SID256	T_{WS100}	Number of Wait states at 100 MHz	3	–	–	-	LP mode. V_{CCD} = 1.1 V
SID257	T_{WS50}	Number of Wait states at 50 MHz	2	–	–	-	ULP mode. V_{CCD} = 0.9 V

1) It can take as much as 16 milliseconds to write to flash. During this time, the device should not be reset, or flash operations will be interrupted and cannot be relied on to have completed. Reset sources include the XRES pin, software resets, CPU lockup states and privilege violations, improper power supply levels, and watchdogs. Make certain that these are not inadvertently activated.

6.6 System resources

Table 32 System resources

Spec ID	Parameter	Description	Min	Typ	Max	Unit	Details/conditions
Power-On-Reset with brown-out DC specifications							
Precise POR (PPOR)							
SID190	$V_{FALLPPOR}$	BOD trip voltage in Active and Sleep modes. V_{DDD}.	1.54	–	–	V	BOD reset guaranteed for levels below 1.54 V.
SID192	$V_{FALLDPSLP}$	BOD trip voltage in Deep Sleep. V_{DDD}.	1.54	–	–	V	–
SID192A	V_{DDRAMP}	Maximum power supply ramp rate (any supply)	–	–	100	mV/µs	Active mode
POR with brown-out AC specification							
SID194A	V_{DDRAMP_DS}	Maximum power supply ramp rate (any supply) in Deep Sleep	–	–	10	mV/µs	BOD operation guaranteed.
Voltage monitors DC specifications							
SID195	V_{HVDI1}	–	1.38	1.43	1.47	V	–
SID196	V_{HVDI2}	–	1.57	1.63	1.68	V	–
SID197	V_{HVDI3}	–	1.76	1.83	1.89	V	–
SID198	V_{HVDI4}	–	1.95	2.03	2.1	V	–
SID199	V_{HVDI5}	–	2.05	2.13	2.2	V	–
SID200	V_{HVDI6}	–	2.15	2.23	2.3	V	–
SID201	V_{HVDI7}	–	2.24	2.33	2.41	V	–
SID202	V_{HVDI8}	–	2.34	2.43	2.51	V	–
SID203	V_{HVDI9}	–	2.44	2.53	2.61	V	–
SID204	V_{HVDI10}	–	2.53	2.63	2.72	V	–
SID205	V_{HVDI11}	–	2.63	2.73	2.82	V	–
SID206	V_{HVDI12}	–	2.73	2.83	2.92	V	–
SID207	V_{HVDI13}	–	2.82	2.93	3.03	V	–
SID208	V_{HVDI14}	–	2.92	3.03	3.13	V	–
SID209	V_{HVDI15}	–	3.02	3.13	3.23	V	–
SID211	LVI_IDD	Block current	–	5	15	µA	–
Voltage monitors AC specification							
SID212	$T_{MONTRIP}$	Voltage monitor trip time	–	–	170	ns	–

6.6.1 SWD interface

Table 33 SWD and trace specifications

Spec ID#	Parameter	Description	Min	Typ	Max	Unit	Details/conditions
SWD and trace interface							
SID214	F_SWDCLK2	1.7 V ≤ V_{DDD} ≤ 3.6 V	–	–	25	MHz	LP Mode. V_{CCD} = 1.1 V.
SID214L	F_SWDCLK2L	1.7 V ≤ V_{DDD} ≤ 3.6 V	–	–	12	MHz	ULP Mode. V_{CCD} = 0.9 V.
SID215	T_SWDI_SETUP	T = 1/f SWDCLK	0.25 × T	–	–	ns	–
SID216	T_SWDI_HOLD	T = 1/f SWDCLK	0.25 × T	–	–	ns	–
SID217	T_SWDO_VALID	T = 1/f SWDCLK	–	–	0.5 × T	ns	–
SID217A	T_SWDO_HOLD	T = 1/f SWDCLK	1	–	–	ns	–
SID214T	F_TRCLK_LP1	With Trace Data setup/ hold times of 2/1 ns respectively	–	–	50	MHz	LP Mode. V_{DD} = 1.1 V.
SID215T	F_TRCLK_LP2	With Trace Data setup/ hold times of 3/2 ns respectively	–	–	50	MHz	LP Mode. V_{DD} = 1.1 V.
SID216T	F_TRCLK_ULP	With Trace Data setup/ hold times of 3/2 ns respectively	–	–	20	MHz	ULP Mode. V_{DD} = 0.9 V.

6.6.2 Internal main oscillator

Table 34 IMO DC specifications

Spec ID	Parameter	Description	Min	Typ	Max	Unit	Details/conditions
SID218	I_{IMO1}	IMO operating current at 8 MHz	–	9	15	µA	–

Table 35 IMO AC specifications

Spec ID	Parameter	Description	Min	Typ	Max	Unit	Details/conditions
SID223	$F_{IMOTOL1}$	Frequency variation centered on 8 MHz	–	–	±2	%	–
SID227	T_{JITR}	Cycle-to-cycle and period jitter	–	250	–	ps	–

6.6.3 Internal low-speed oscillator

Table 36 ILO DC specification

Spec ID	Parameter	Description	Min	Typ	Max	Unit	Details/conditions
SID231	I_{ILO2}	ILO operating current at 32 kHz	–	0.3	0.7	µA	–

Table 37 ILO AC specifications

Spec ID	Parameter	Description	Min	Typ	Max	Unit	Details/conditions
SID234	$T_{STARTILO1}$	ILO startup time	–	–	7	µs	Startup time to 95% of final frequency
SID236	$T_{LIODUTY}$	ILO duty cycle	45	50	55	%	–
SID237	$F_{ILOTRIM1}$	ILO frequency	28.8	32	36.1	kHz	Factory trimmed

6.6.4 Crystal oscillator specifications

Table 38 ECO specifications

Spec ID	Parameter	Description	Min	Typ	Max	Unit	Details/conditions
MHz ECO DC specifications							
SID316	I_{DD_MHz}	Block operating current with Cload up to 18 pF	–	800	1600	µA	Max = 35 MHz, Typ = 16 MHz
MHz ECO AC specifications							
SID317	F_MHz	Crystal frequency range	16	–	35	MHz	Some restrictions apply. Refer to the device reference manual.
kHz ECO DC specifications							
SID318	I_{DD_kHz}	Block operating current with 32-kHz crystal	–	0.38	1	µA	–
SID321E	ESR32K	Equivalent series resistance	–	80	–	kΩ	–
SID322E	PD32K	Drive level	–	–	1	µW	–
kHz ECO AC specifications							
SID319	F_kHz	32 kHz frequency	–	32.768	–	kHz	–
SID320	Ton_kHz	Startup time	–	–	500	ms	–
SID320E	F_{TOL32K}	Frequency tolerance	–	50	250	ppm	–

6.6.5 External clock specifications

Table 39 External clock specifications

Spec ID	Parameter	Description	Min	Typ	Max	Unit	Details/conditions
SID305	$EXTCLK_{FREQ}$	External clock input frequency	0	–	100	MHz	–
SID306	$EXTCLK_{DUTY}$	Duty cycle; measured at $V_{DD/2}$	45	–	55	%	–

6.6.6 PLL specifications

Table 40 PLL specifications

Spec ID	Parameter	Description	Min	Typ	Max	Unit	Details/conditions
SID304P	PLL_IN	Input frequency to PLL block	4	–	64	MHz	–
SID305P	PLL_LOCK	Time to achieve PLL lock	–	16	35	µs	–
SID306P	PLL_OUT	Output frequency from PLL block	10.625	–	150	MHz	–
SID307P	PLL_IDD	PLL current	–	0.55	1.1	mA	Typ. at 100 MHz out.
SID308P	PLL_JTR	Period jitter	–	–	150	ps	100 MHz output frequency

Table 41 Clock source switching time

Spec ID	Parameter	Description	Min	Typ	Max	Unit	Details/conditions
SID262	$TCLK_{SWITCH}$	Clock switching from clk1 to clk2 in clock periods; for example, from IMO (clk1) to FLL (clk2).[1)]	–	–	4 clk1 + 3 clk2	periods	–

1) As an example, if the `clk_path[1]` source is changed from the IMO to the FLL (see Figure 3) then clk1 is the IMO and clk2 is the FLL.

6.6.7 FLL specifications

Table 42 Frequency locked loop (FLL) specifications

Spec ID	Parameter	Description	Min	Typ	Max	Unit	Details/conditions
SID450	FLL_RANGE	Input frequency range.	0.001	–	100	MHz	Lower limit allows lock to USB SOF signal (1 kHz). Upper limit is for External input.

(table continues...)

Table 42 (continued) Frequency locked loop (FLL) specifications

Spec ID	Parameter	Description	Min	Typ	Max	Unit	Details/conditions
SID451	FLL_OUT_DIV2	Output frequency range. V_{CCD} = 1.1 V	24	–	100	MHz	Output range of FLL divided-by-2 output
SID451A	FLL_OUT_DIV2	Output frequency range. V_{CCD} = 0.9 V	24	–	50	MHz	Output range of FLL divided-by-2 output
SID452	FLL_DUTY_DIV2	Divided-by-2 output; High or Low	47	–	53	%	–
SID454	FLL_WAKEUP	Time from stable input clock to 1% of final value on Deep Sleep wakeup	–	–	7.5	µs	With IMO input, less than 10°C change in temperature while in Deep Sleep, and Fout ≥ 50 MHz.
SID455	FLL_JITTER	Period jitter (1 sigma) at 100 MHz	–	–	35	ps	50 ps at 48 MHz, 35 ps at 100 MHz
SID456	FLL_CURRENT	CCO + Logic current	–	–	5.5	µA/MHz	–

6.6.8 USB

Table 43 USB specifications (USB requires LP Mode 1.1-V internal supply)

Spec ID	Parameter	Description	Min	Typ	Max	Unit	Details/conditions
USB Block specifications							
SID322U	Vusb_3.3	Device supply for USB operation	3.15	–	3.6	V	USB Configured
SID323U	Vusb_3	Device supply for USB operation (functional operation only)	2.85	–	3.6	V	USB Configured
SID325U	Iusb_config	Block supply current in Active mode	–	8	–	mA	V_{DDD} = 3.3 V
SID328	Iusb_suspend	Block supply current in suspend mode	–	0.5	–	mA	V_{DDD} = 3.3 V, Device connected
SID329	Iusb_suspend	Block supply current in suspend mode	–	0.3	–	mA	V_{DDD} = 3.3 V, Device disconnected
SID330U	USB_Drive_Res	USB driver impedance	28	–	44	Ω	Series resistors are on chip
SID331U	USB_Pulldown	USB pull-down resistors in Host mode	14.25	–	24.8	kΩ	–

(table continues...)

Table 43 (continued) USB specifications (USB requires LP Mode 1.1-V internal supply)

Spec ID	Parameter	Description	Min	Typ	Max	Unit	Details/conditions
SID332U	USB_Pullup_Idle	Idle mode range	900	–	1575	Ω	Bus idle
SID333U	USB_Pullup	Active mode	1425	–	3090	Ω	Upstream device transmitting

6.6.9 QSPI

Table 44 QSPI specifications

Spec ID#	Parameter	Description	Min	Typ	Max	Unit	Details/conditions
SMIF QSPI specifications. All specs with 15-pF load. Measured from 50% to 50% waveform transitions.							
SID390Q	Fsmifclock	SMIF QSPI output clock frequency	–	–	80	MHz	LP mode (1.1 V)
SID390QU	Fsmifclocku	SMIF QSPI output clock frequency	–	–	50	MHz	ULP mode (0.9 V). Guaranteed by Char.
SID397Q	Idd_qspi	Block current in LP mode (1.1 V)	–	–	1900	µA	LP mode (1.1 V)
SID398Q	Idd_qspi_u	Block current in ULP mode (0.9 V)	–	–	590	µA	ULP mode (0.9 V)
SID391Q	Tsetup	Input data set-up time with respect to clock capturing falling edge	4.5	–	–	ns	Guaranteed by characterization
SID392Q	Tdatahold	Input data hold time with respect to clock capturing falling edge	1	–	–	ns	–
SID393Q	Tdataoutvalid	Output data valid time with respect to clock falling edge	–	–	3.7	ns	7.5-ns max for ULP mode (0.9 V)
SID394Q	Tholdtime	Output data hold time with respect to clock rising edge	3	–	–	ns	–
SID395Q	Tseloutvalid	Output select valid time with respect to clock rising edge	–	–	7.5	ns	15-ns max for ULP mode (0.9 V)
SID396Q	Tselouthold	Output select hold time with respect to clock rising edge	Tsclk/2	–	–	ns	Tsclk = Fsmifclk cycle time

6.6.10 Audio subsystem

Table 45 Audio subsystem specifications

Spec ID#	Parameter	Description	Min	Typ	Max	Unit	Details/conditions
PDM specifications							
SID400P	PDM_IDD1	PDM Active current, stereo operation, 1-MHz clock	–	175	–	µA	16-bit audio at 16 ksps
SID401	PDM_IDD2	PDM Active current, stereo operation, 3-MHz clock	–	600	–	µA	24-bit audio at 48 ksps
SID402[1)]	PDM_JITTER	RMS jitter in PDM clock	–200	–	200	ps	–
SID403[1)]	PDM_CLK	PDM clock speed	0.384	–	3.072	MHz	–
SID403A[1)]	PDM_BLK_CLK	PDM block input clock	1.024	–	49.152	MHz	–
SID403B[1)]	PDM_SETUP	Data input set-up time to PDM_CLK edge	10	–	–	ns	–
SID403C[1)]	PDM_HOLD	Data input hold time to PDM_CLK edge	10	–	–	ns	–
SID404[1)]	PDM_OUT	Audio sample rate	8	–	48	ksps	–
SID405[1)]	PDM_WL	Word length	16	–	24	bits	–
SID406[1)]	PDM_SNR	Signal-to-Noise Ratio (A-weighted)	–	100	–	dB	PDM input, 20 Hz to 20 kHz BW
SID407[1)]	PDM_DR	Dynamic range (A-weighted)	–	100	–	dB	20 Hz to 20 kHz BW, –60 dB FS
SID408[1)]	PDM_FR	Frequency response	–0.2	–	0.2	dB	DC to 0.45f, DC Blocking filter off.
SID409[1)]	PDM_SB	Stop band	–	0.566	–	f	–
SID410[1)]	PDM_SBA	Stop band attenuation	–	60	–	dB	–

(table continues...)

Table 45 (continued) Audio subsystem specifications

Spec ID#	Parameter	Description	Min	Typ	Max	Unit	Details/conditions
SID411[1)]	PDM_GAIN	Adjustable gain	–12	–	10.5	dB	PDM to PCM, 1.5 dB/step
SID412[1)]	PDM_ST	Startup time	–	48	–	Word Select (WS) cycles	-
I2S Specifications. The same for LP and ULP modes unless stated otherwise.							
SID415	I2S_IDD	Block current	–	400	–	µA	-
SID413	I2S_WORD	Length of I2S Word	8	–	32	bits	-
SID414	I2S_WS	Word clock frequency in LP mode	–	–	192	kHz	12.288-MHz bit clock with 32-bit word
SID414M	I2S_WS_U	Word clock frequency in ULP mode	–	–	48	kHz	3.072-MHz bit clock with 32-bit word
SID414A	I2S_WS_TDM	Word clock frequency in TDM mode for LP	–	–	48	kHz	Eight 32-bit channels
SID414X	I2S_WS_TDM_U	Word clock frequency in TDM mode for ULP	–	–	12	kHz	Eight 32-bit channels
I2S Slave mode							
SID430	TS_WS	WS setup time to the following rising edge of SCK for LP mode	5	–	–	ns	–
SID430U	TS_WS_U	WS setup time to the following rising edge of SCK for ULP mode	11	–	–	ns	–
SID430A	TH_WS	WS hold time to the following edge of SCK	T_{MCLK_SOC}[2)] + 5	–	–	ns	–

(table continues...)

Table 45 (continued) Audio subsystem specifications

Spec ID#	Parameter	Description	Min	Typ	Max	Unit	Details/conditions
SID432	TD_SDO	Delay time of TX_SDO transition from edge of TX_SCK for LP mode	$-(T_{MCLK_SOC} + 25)$	–	$T_{MCLK_SOC} + 25$	ns	Associated clock edge depends on selected polarity
SID432U	TD_SDO_U	Delay time of TX_SDO transition from edge of TX_SCK for ULP mode	$-(T_{MCLK_SOC} + 70)$	–	$T_{MCLK_SOC} + 70$	ns	Associated clock edge depends on selected polarity
SID433	TS_SDI	RX_SDI setup time to the following edge of RX_SCK in LP mode	5	–	–	ns	–
SID433U	TS_SDI_U	RX_SDI setup time to the following edge of RX_SCK in ULP mode	11	–	–	ns	–
SID434	TH_SDI	RX_SDI hold time to the rising edge of RX_SCK	$T_{MCLK_SOC} + 5$	–	–	ns	–
SID435	TSCKCY	TX/RX_SCK bit clock duty cycle	45	–	55	%	–
I2S Master mode							
SID437	TD_WS	WS transition delay from falling edge of SCK in LP mode	–10	–	20	ns	–

(table continues...)

Table 45 (continued) Audio subsystem specifications

Spec ID#	Parameter	Description	Min	Typ	Max	Unit	Details/conditions
SID437U	TD_WS_U	WS transition delay from falling edge of SCK in ULP mode	–10	–	40	ns	–
SID438	TD_SDO	SDO transition delay from falling edge of SCK in LP mode	–10	–	20	ns	–
SID438U	TD_SDO	SDO transition delay from falling edge of SCK in ULP mode	–10	–	40	ns	–
SID439	TS_SDI	SDI setup time to the associated edge of SCK	5	–	–	ns	Associated clock edge depends on selected polarity.
SID440	TH_SDI	SDI hold time to the associated edge of SCK	T_{MCLK_SOC} + 5	–	–	ns	T is TX/RX_SCK Bit Clock period. Associated clock edge depends on selected polarity.
SID443	TSCKCY	SCK bit clock duty cycle	45	–	55	%	–
SID445	FMCLK_SOC	MCLK_SOC frequency in LP mode	1.024	–	98.304	MHz	FMCLK_SOC = 8 × Bit-clock
SID445U	FMCLK_SOC_U	MCLK_SOC frequency in ULP mode	1.024	–	24.576	MHz	FMCLK_SOC_U = 8 × Bit-clock
SID446	TMCLKCY	MCLK_SOC duty cycle	45	–	55	%	–
SID447	TJITTER	MCLK_SOC input jitter	–100	–	100	ps	–

1) Guaranteed by design, not production tested.
2) TMCLK_SOC is the internal I2S master clock period.

6.6.11 Smart I/O

Table 46 Smart I/O specifications

Spec ID#	Parameter	Description	Min	Typ	Max	Unit	Details/conditions
SID420	SMIO_BYP	Smart I/O bypass delay	–	–	2	ns	–
SID421	SMIO_LUT	Smart I/O LUT prop delay	–	8	–	ns	–

6.6.12 SD Host controller and eMMC

Table 47 SD Host controller and eMMC specifications

Spec ID#	Parameter	Description	Min	Typ	Max	Unit	Details/conditions
SD Host Controller and eMMC specifications (SD Host clock (see the Clocking diagram) must be divided by 2 or more when used as source in DDR modes. Specifications are Guaranteed by Design.							
SID_SD390	SD_DS	I/O drive select	4	–	4	mA	drive_sel = '01' for all modes
SID_SD391	SD_TR	Input transition time	0.7	–	3	ns	–
SD:DS timing							
SID_SD392	SD_CLK	Interface clock period (LP mode)	–	–	25	MHz	(40-ns period)
SID_SD393	SD_CLK	Interface clock period (ULP mode)	–	–	8	MHz	(125-ns period)
SID_SD394	SD_DCMD_CL	I/O loading at DATA/CMD pins	–	30	–	pF	–
SID_SD395	SD_CLK_CL	I/O loading at CLK pins	–	30	–	pF	–
SID_SD396	SD_TS_OUT	Output: Setup time of CMD/DAT prior to CLK	5.1	–	–	ns	–
SID_SD397	SD_HLD_OUT	Output: Hold time of CMD/DAT after CLK	5.1	–	–	ns	–
SID_SD398	SD_TS_IN	Input: Setup time of CMD/DAT prior to CLK (LP mode)	24	–	–	ns	–

(table continues...)

Table 47 (continued) SD Host controller and eMMC specifications

Spec ID#	Parameter	Description	Min	Typ	Max	Unit	Details/conditions
SID_SD399	SD_TS_IN	Input: Setup time of CMD/DAT prior to CLK (ULP mode)	109	–	–	ns	–
SID_SD400	SD_HLD_IN	Input: Hold time of CMD/DAT after CLK	2.1	–	–	ns	–
SD:HS timing							
SID_SD401	SD_CLK	Interface clock period (LP mode)	–	–	45	MHz	(20-ns period)
SID_SD402	SD_CLK	Interface clock period (ULP mode)	–	–	16	MHz	(62.5-ns period)
SID_SD403	SD_DCMD_CL	I/O loading at DATA/CMD pins	–	30	–	pF	–
SID_SD404	SD_CLK_CL	I/O loading at CLK pins	–	30	–	pF	–
SID_SD405	SD_TS_OUT	Output: Setup time of CMD/DAT prior to CLK	6.1	–	–	ns	–
SID_SD406	SD_HLD_OUT	Output: Hold time of CMD/DAT after CLK	2.1	–	–	ns	–
SID_SD407	SD_TS_IN	Input: Setup time of CMD/DAT prior to CLK (LP mode)	8	–	–	ns	–
SID_SD408	SD_TS_IN	Input: Setup time of CMD/DAT prior to CLK (ULP mode)	48	–	–	ns	–
SID_SD409	SD_HLD_IN	Input: Hold time of CMD/DAT after CLK	2.5	–	–	ns	–

(table continues...)

Table 47 (continued) SD Host controller and eMMC specifications

Spec ID#	Parameter	Description	Min	Typ	Max	Unit	Details/conditions
SD:SDR-12 timing							
SID_SD410	SD_CLK	Interface clock period (LP mode)	–	–	25	MHz	(40-ns period)
SID_SD411	SD_CLK	Interface clock period (ULP mode)	–	–	8	MHz	(125-ns period)
SID_SD412	SD_CLK_DC	Duty cycle of output CLK	30	–	70	%	–
SID_SD413	SD_DCMD_CL	I/O loading at DATA/CMD pins	–	30	–	pF	–
SID_SD414	SD_CLK_CL	I/O loading at CLK pins	–	30	–	pF	–
SID_SD415	SD_TS_OUT	Output: Setup time of CMD/DAT prior to CLK	3.1	–	–	ns	–
SID_SD416	SD_HLD_OUT	Output: Hold time of CMD/DAT after CLK	0.9	–	–	ns	–
SID_SD417	SD_TS_IN	Input: Setup time of CMD/DAT prior to CLK (LP mode)	24	–	–	ns	–
SID_SD418	SD_TS_IN	Input: Setup time of CMD/DAT prior to CLK (ULP mode)	109	–	–	ns	–
SID_SD419	SD_HLD_IN	Input: Hold time of CMD/DAT after CLK	1.85	–	–	ns	–
SD:SDR-25 timing							
SID_SD420	SD_CLK	Interface clock period (LP mode)	–	–	50	MHz	(20-ns period)

(table continues...)

Table 47 (continued) SD Host controller and eMMC specifications

Spec ID#	Parameter	Description	Min	Typ	Max	Unit	Details/conditions
SID_SD421	SD_CLK	Interface clock period (ULP mode)	–	–	16	MHz	(62.5-ns period)
SID_SD422	SD_CLK_DC	Duty cycle of output CLK	30	–	70	%	–
SID_SD423	SD_DCMD_CL	I/O loading at DATA/CMD pins	–	30	–	pF	–
SID_SD424	SD_CLK_CL	I/O loading at CLK pins	–	30	–	pF	–
SID_SD425	SD_TS_OUT	Output: Setup time of CMD/DAT prior to CLK	3.1	–	–	ns	–
SID_SD426	SD_HLD_OUT	Output: Hold time of CMD/DAT after CLK	0.9	–	–	ns	–
SID_SD427	SD_TS_IN	Input: Setup time of CMD/DAT prior to CLK (LP mode)	5.8	–	–	ns	–
SID_SD428	SD_TS_IN	Input: Setup time of CMD/DAT prior to CLK (ULP mode)	48	–	–	ns	–
SID_SD429	SD_HLD_IN	Input: Hold time of CMD/DAT after CLK	1.8	–	–	ns	–
SD:SDR-50 timing							
SID_SD430	SD_CLK	Interface clock period (LP mode)	–	–	80	MHz	(12.5-ns period)
SID_SD431	SD_CLK	Interface clock period (ULP mode)	–	–	32	MHz	(31.25-ns period)
SID_SD432	SD_CLK_DC	Duty cycle of output CLK	30	–	70	%	–

(table continues...)

Table 47 (continued) SD Host controller and eMMC specifications

Spec ID#	Parameter	Description	Min	Typ	Max	Unit	Details/conditions
SID_SD433	SD_DCMD_CL	I/O loading at DATA/CMD pins	–	20	–	pF	–
SID_SD434	SD_CLK_CL	I/O loading at CLK pins	–	20	–	pF	–
SID_SD435	SD_TS_OUT	Output: Setup time of CMD/DAT prior to CLK	3.1	–	–	ns	–
SID_SD436	SD_HLD_OUT	Output: Hold time of CMD/DAT after CLK	0.9	–	–	ns	–
SID_SD437	SD_TS_IN	Input: Setup time of CMD/DAT prior to CLK (LP mode)	5	–	–	ns	–
SID_SD438	SD_TS_IN	Input: Setup time of CMD/DAT prior to CLK (ULP mode)	23	–	–	ns	–
SID_SD439	SD_HLD_IN	Input: Hold time of CMD/DAT after CLK	1.8	–	–	ns	–
SD:DDR-50 timing							
SID_SD440	SD_CLK	Interface clock period (LP mode)	–	–	40	MHz	(25-ns period)
SID_SD441	SD_CLK	Interface clock period (ULP mode)	–	–	16	MHz	(62.5-ns period)
SID_SD442	SD_CLK_DC	Duty cycle of output CLK	45	–	55	%	–
SID_SD443	SD_DCMD_CL	I/O loading at DATA/CMD pins	–	30	–	pF	–
SID_SD444	SD_CLK_CL	I/O loading at CLK pins	–	30	–	pF	–

(table continues...)

Table 47 (continued) SD Host controller and eMMC specifications

Spec ID#	Parameter	Description	Min	Typ	Max	Unit	Details/conditions
SID_SD445	SD_TS_OUT	Output: Setup time of CMD/DAT prior to CLK	3.1	–	–	ns	–
SID_SD446	SD_HLD_OUT	Output: Hold time of CMD/DAT after CLK	0.9	–	–	ns	–
SID_SD447	SD_TS_IN	Input: Setup time of CMD/DAT prior to CLK (LP mode)	5.75	–	–	ns	–
SID_SD448	SD_TS_IN	Input: Setup time of CMD/DAT prior to CLK (ULP mode)	24	–	–	ns	–
SID_SD449	SD_HLD_IN	Input: Hold time of CMD/DAT after CLK	1.8	–	–	ns	–
eMMC:BWC timing							
SID_SD450	SD_CLK	Interface clock period (LP mode)	–	–	26	MHz	(38.4-ns period)
SID_SD451	SD_CLK	Interface clock period (ULP mode)	–	–	8	MHz	(125-ns period)
SID_SD452	SD_DCMD_CL	I/O loading at DATA/CMD pins	–	30	–	pF	–
SID_SD453	SD_CLK_CL	I/O loading at CLK pins	–	30	–	pF	–
SID_SD454	SD_TS_OUT	Output: Setup time of CMD/DAT prior to CLK	3.1	–	–	ns	–
SID_SD455	SD_HLD_OUT	Output: Hold time of CMD/DAT after CLK	3.1	–	–	ns	–

(table continues...)

Table 47 (continued) SD Host controller and eMMC specifications

Spec ID#	Parameter	Description	Min	Typ	Max	Unit	Details/conditions
SID_SD456	SD_TS_IN	Input: Setup time of CMD/DAT prior to CLK (LP mode)	9.7	–	–	ns	–
SID_SD457	SD_TS_IN	Input: Setup time of CMD/DAT prior to CLK (ULP mode)	96	–	–	ns	–
SID_SD458	SD_HLD_IN	Input: Hold time of CMD/DAT after CLK	8.3	–	–	ns	–
eMMC:SDR timing							
SID_SD459	SD_CLK	Interface clock period (LP mode)	–	–	52	MHz	(19.2-ns period)
SID_SD460	SD_CLK	Interface clock period (ULP mode)	–	–	16	MHz	(62.5-ns period)
SID_SD461	SD_DCMD_CL	I/O loading at DATA/CMD pins	–	30	–	pF	–
SID_SD462	SD_CLK_CL	I/O loading at CLK pins	–	30	–	pF	–
SID_SD463	SD_TS_OUT	Output: Setup time of CMD/DAT prior to CLK	3.1	–	–	ns	–
SID_SD464	SD_HLD_OUT	Output: Hold time of CMD/DAT after CLK	3.1	–	–	ns	–
SID_SD465	SD_TS_IN	Input: Setup time of CMD/DAT prior to CLK (LP mode)	5.3	–	–	ns	–

(table continues...)

Table 47 (continued) SD Host controller and eMMC specifications

Spec ID#	Parameter	Description	Min	Typ	Max	Unit	Details/conditions
SID_SD466	SD_TS_IN	Input: Setup time of CMD/DAT prior to CLK (ULP mode)	48	–	–	ns	–
SID_SD467	SD_HLD_IN	Input: Hold time of CMD/DAT after CLK	2.5	–	–	ns	–
SD Host Block current specification							
SID_SD400SD	IDD_SD_1	SD Host block current consumption at 100 MHz	–	4.65	5	mA	–
SID_SD401SD	IDD_SD_2	SD Host block current consumption at 50 MHz	–	3.75	4.3	mA	–

6.6.13 JTAG boundary scan

Table 48 JTAG boundary scan

Spec ID#	Parameter	Description	Min	Typ	Max	Unit	Details/conditions
JTAG Boundary scan parameters							
JTAG Boundary scan parameters for 1.1 V (LP) mode operation:							
SID468	TCKLOW	TCK LOW	52	–	–	ns	–
SID469	TCKHIGH	TCK HIGH	10	–	–	ns	–
SID470	TCK_TDO	TCK falling edge to output valid	–	–	40	ns	–
SID471	TSU_TCK	Input valid to TCK rising edge	12	–	–	ns	–
SID472	TCk_THD	Input hold time to TCK rising edge	10	–	–	ns	–
SID473	TCK_TDOV	TCK falling edge to output valid (High-Z to Active).	40	–	–	ns	–
SID474	TCK_TDOZ	TCK falling edge to output valid (Active to High-Z).	40	–	–	ns	–
JTAG Boundary scan parameters for 0.9 V (ULP) mode operation:							
SID468A	TCKLOW	TCK low	102	–	–	ns	–

(table continues...)

Table 48 (continued) JTAG boundary scan

Spec ID#	Parameter	Description	Min	Typ	Max	Unit	Details/conditions
SID469A	TCKHIGH	TCK high	20	–	–	ns	–
SID470A	TCK_TDO	TCK falling edge to output valid	–	–	80	ns	–
SID471A	TSU_TCK	Input valid to TCK rising edge	22	–	–	ns	–
SID472A	TCk_THD	Input hold time to TCK rising edge	20	–	–	ns	–
SID473A	TCK_TDOV	TCK falling edge to output valid (high-Z to active).	80	–	–	ns	–
SID474A	TCK_TDOZ	TCK falling edge to output valid (active to high-Z).	80	–	–	ns	–

7 Ordering information

Table 49 lists the CY8C62X8 and CY8C62XA part numbers and features. See also the product selector guide.

Table 49 Marketing part numbers

Product[1)]	CM4 CPU Speed [LP/ULP] (MHz)	CM0+ CPU Speed [LP/ULP] (MHz)	Flash (KB)	SRAM (KB)	CAPSENSE™	Crypto	GPIO	Package
CY8C624ABZI-S2D04	150/50	100/25	2048	1024	–	–	100	124-BGA
CY8C624ABZI-S2D04T								
CY8C624ABZI-S2D14	150/50	100/25	2048	1024	Y	–	100	124-BGA
CY8C624ABZI-S2D14T								
CY8C624AAZI-S2D14	150/50	100/25	2048	1024	Y	–	102	128-TQFP
CY8C624ABZI-S2D44	150/50	100/25	2048	1024	Y	Y	100	124-BGA
CY8C624ABZI-S2D44T								
CY8C624AAZI-S2D44	150/50	100/25	2048	1024	Y	Y	102	128-TQFP
CY8C624AFNI-S2D43T	150/50	100/25	2048	1024	Y	Y	82	100-WLCSP
CY8C624ALQI-S2D42	150/50	100/25	2048	1024	Y	Y	53	68-QFN
CY8C624ALQI-S2D02	150/50	100/25	2048	1024	–	–	53	68-QFN
CY8C6248AZI-S2D14	150/50	100/25	1024	512	Y	–	102	128-TQFP
CY8C6248BZI-S2D44	150/50	100/25	1024	512	Y	Y	100	124-BGA
CY8C6248BZI-S2D44T								
CY8C6248AZI-S2D44	150/50	100/25	1024	512	Y	Y	102	128-TQFP
CY8C6248FNI-S2D43T	150/50	100/25	1024	512	Y	Y	82	100-WLCSP
CY8C6248LQI-S2D42	150/50	100/25	1024	512	Y	Y	53	68-QFN
CY8C6248LQI-S2D02	150/50	100/25	1024	512	–	–	53	68-QFN

1) The tape and reel field in the part number (part numbers ending with the letter 'T') is only used for ordering purposes. This field is not included in the MPN database used for firmware development.

Base features (available in all the part numbers):

- CPU Subsystem: Arm® Cortex®-M4F (CM4) and Arm® Cortex®-M0+ (CM0+), 3x DMA Controllers
- SCBs: 1x Deep-Sleep SCB (I2C/SPI), 12x SCBs (I2C/SPI/UART)[2)]
- Analog: 2x Low-Power Comparators, 1x 12-bit SAR ADC
- Digital: 2x SD Host Controllers, 1x Quad-SPI Memory I/F, 32x TCPWMs[2)]
- Audio: 2x I2S interface, 2x PDM channels
- Others: 1x USB Full-Speed, 1x DC-DC Buck Converter, Segment LCD Drive

2 The number of instances of a peripheral, like SCB (I2C/SPI/UART), or like TCPWM, for example, will be limited by the number of GPIOs supported by the package. Please use the ModusToolbox™ software device configuration tools to find the package specific availability of peripherals like SCB and TCPWM.

7.1 PSOC™ 6 MPN decoder

CY XX 6 A B C DD E - FF G H I JJ K L

Table 50 PSOC™ 6 MPN Decoder

Field	Description	Values	Meaning
CY	Cypress	CY	Cypress - An Infineon Technologies company
XX	Firmware	8C	Standard
		B0	“Secure Boot” v1
		S0	“Standard Secure”-AWS
6	Architecture	6	PSOC™ 6
A	Line	0	Value
		1	Programmable
		2	Performance
		3	Connectivity
		4	Secured
B	Speed	2	100 MHz
		3	150 MHz
		4	150/50 MHz
C	Memory size (flash/ SRAM)	0-3	Reserved
		4	256K/128K
		5	512K/256K
		6	512K/128K
		7	1024K/288K
		8	1024K/512K
		9	Reserved
		A	2048K/1024K
DD	Package	AZ, AX	TQFP
		LQ	QFN
		BZ	BGA
		FM	M-CSP
		FN, FD, FT	WLCSP
E	Temperature range	C	Consumer
		I	Industrial
		Q	Extended Industrial
FF	Feature code		Cypress internal
		S2–S6	

(table continues...)

7 Ordering information

Table 50 (continued) PSOC™ 6 MPN Decoder

Field	Description	Values	Meaning
		BL	Integrated Bluetooth® LE
G	CPU Core	F	Single core
		D	Dual core
H	Attributes Code	0–9	Feature set
I	GPIO count	1	31–50
		2	51–70
		3	71–90
		4	91–110
JJ	Engineering sample (optional)	ES	Engineering samples or not
K	Die Revision (optional)		Base
		A1–A9	Die revision
L	Tape/Reel Shipment (optional)	T	Tape and Reel shipment

8 Packaging

This product line is offered in 124-ball BGA, 128-pin TQFP, 68-pin QFN, and 100-ball WLCSP packages.

Table 51 Package dimensions

Spec ID#	Package	Description	Package dwg #
PKG_1	124-ball BGA	124-ball BGA (9.0 mm × 9.0 mm × 1.0 mm) BZ0AA/ VZC124/D2A124	001-97718
PKG_2	128-pin TQFP	128-pin TQFP (14 mm × 20 mm × 1.4 mm) A128RA mm pitch	51-85101
PKG_3	100-ball WLCSP	100-ball WLCSP (4.1068 mm × 3.9025 mm × 0.467 mm) FN100 (PSOC6A-2M)	002-23991
PKG_4	68-pin QFN	68-pin QFN ((8 × 8 × 1.0 mm) LT68D, 6.2 × 6.2 mm E-Pad (Sawn type))	001-96836

Table 52 Package characteristics

Parameter	Description	Conditions	Min	Typ	Max	Unit
T_A	Operating ambient temperature	–	–40	25	85	°C
T_J	Operating junction temperature	–	–40	–	100	°C
T_{JA}	Package θ_{JA} (124-ball BGA)	–	–	31.9	–	°C/W
T_{JC}	Package θ_{JC} (124-ball BGA)	–	–	11	–	°C/W
T_{JA}	Package θ_{JA} (128-pin TQFP)	–	–	33.24	–	°C/W
T_{JC}	Package θ_{JC} (128-pin TQFP)	–	–	6	–	°C/W
T_{JA}	Package θ_{JA} (100-ball WLCSP)	-	-	19.1	-	°C/W
T_{JC}	Package θ_{JC} (100-ball WLCSP)	-	-	0.12	-	°C/W
T_{JA}	Package θ_{JA} (68-pin QFN)	–	–	15.4	–	°C/W
T_{JC}	Package θ_{JC} (68-pin QFN)	–	–	2	–	°C/W

Table 53 Solder reflow peak temperature

Package	Maximum peak temperature	Maximum time at peak temperature
All packages	260°C	30 seconds

Table 54 Package moisture sensitivity level (MSL), IPC/JEDEC J-STD-2

Package	MSL
124-ball BGA	MSL 3
128-pin TQFP	MSL 3
68-pin QFN	MSL 3
100-ball WLCSP	MSL 1

8 Packaging

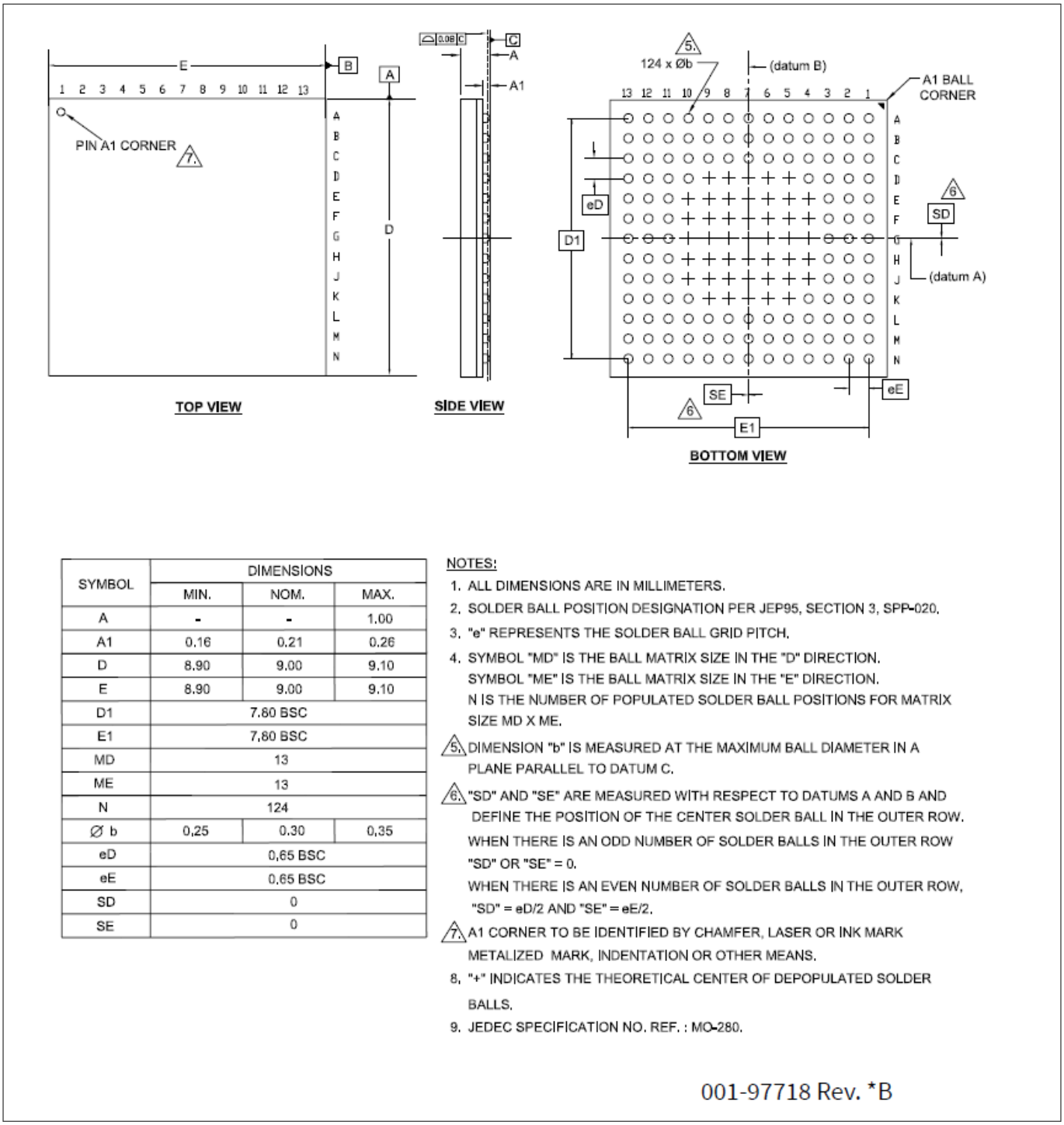

SYMBOL	DIMENSIONS		
	MIN.	NOM.	MAX.
A	-	-	1.00
A1	0.16	0.21	0.26
D	8.90	9.00	9.10
E	8.90	9.00	9.10
D1		7.80 BSC	
E1		7.80 BSC	
MD		13	
ME		13	
N		124	
Ø b	0.25	0.30	0.35
eD		0.65 BSC	
eE		0.65 BSC	
SD		0	
SE		0	

NOTES:

1. ALL DIMENSIONS ARE IN MILLIMETERS.
2. SOLDER BALL POSITION DESIGNATION PER JEP95, SECTION 3, SPP-020.
3. "e" REPRESENTS THE SOLDER BALL GRID PITCH.
4. SYMBOL "MD" IS THE BALL MATRIX SIZE IN THE "D" DIRECTION.
   SYMBOL "ME" IS THE BALL MATRIX SIZE IN THE "E" DIRECTION.
   N IS THE NUMBER OF POPULATED SOLDER BALL POSITIONS FOR MATRIX SIZE MD X ME.
5. DIMENSION "b" IS MEASURED AT THE MAXIMUM BALL DIAMETER IN A PLANE PARALLEL TO DATUM C.
6. "SD" AND "SE" ARE MEASURED WITH RESPECT TO DATUMS A AND B AND DEFINE THE POSITION OF THE CENTER SOLDER BALL IN THE OUTER ROW.
   WHEN THERE IS AN ODD NUMBER OF SOLDER BALLS IN THE OUTER ROW "SD" OR "SE" = 0.
   WHEN THERE IS AN EVEN NUMBER OF SOLDER BALLS IN THE OUTER ROW, "SD" = eD/2 AND "SE" = eE/2.
7. A1 CORNER TO BE IDENTIFIED BY CHAMFER, LASER OR INK MARK METALIZED MARK, INDENTATION OR OTHER MEANS.
8. "+" INDICATES THE THEORETICAL CENTER OF DEPOPULATED SOLDER BALLS.
9. JEDEC SPECIFICATION NO. REF. : MO-280.

001-97718 Rev. *B

Figure 21 124-ball VFBGA (9.0 × 9.0 × 1.0 mm) BZ0AA/VZC124/D2A124 package outline (PG-VFBGA-124)

8 Packaging

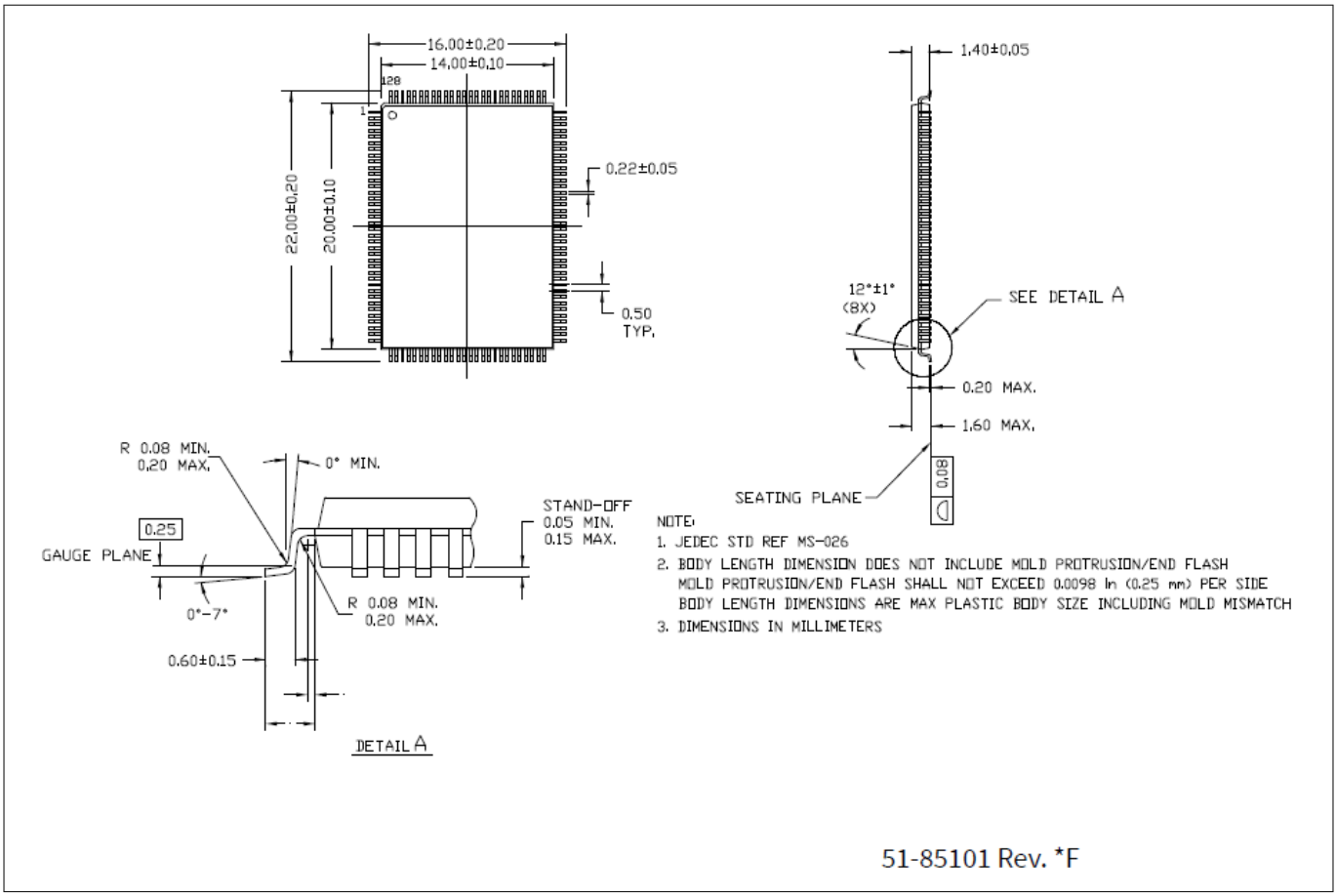

Figure 22 128-pin TQFP (14.0 × 20.0 × 1.4 mm) A128RA package outline (PG-TQFP-128)

8 Packaging

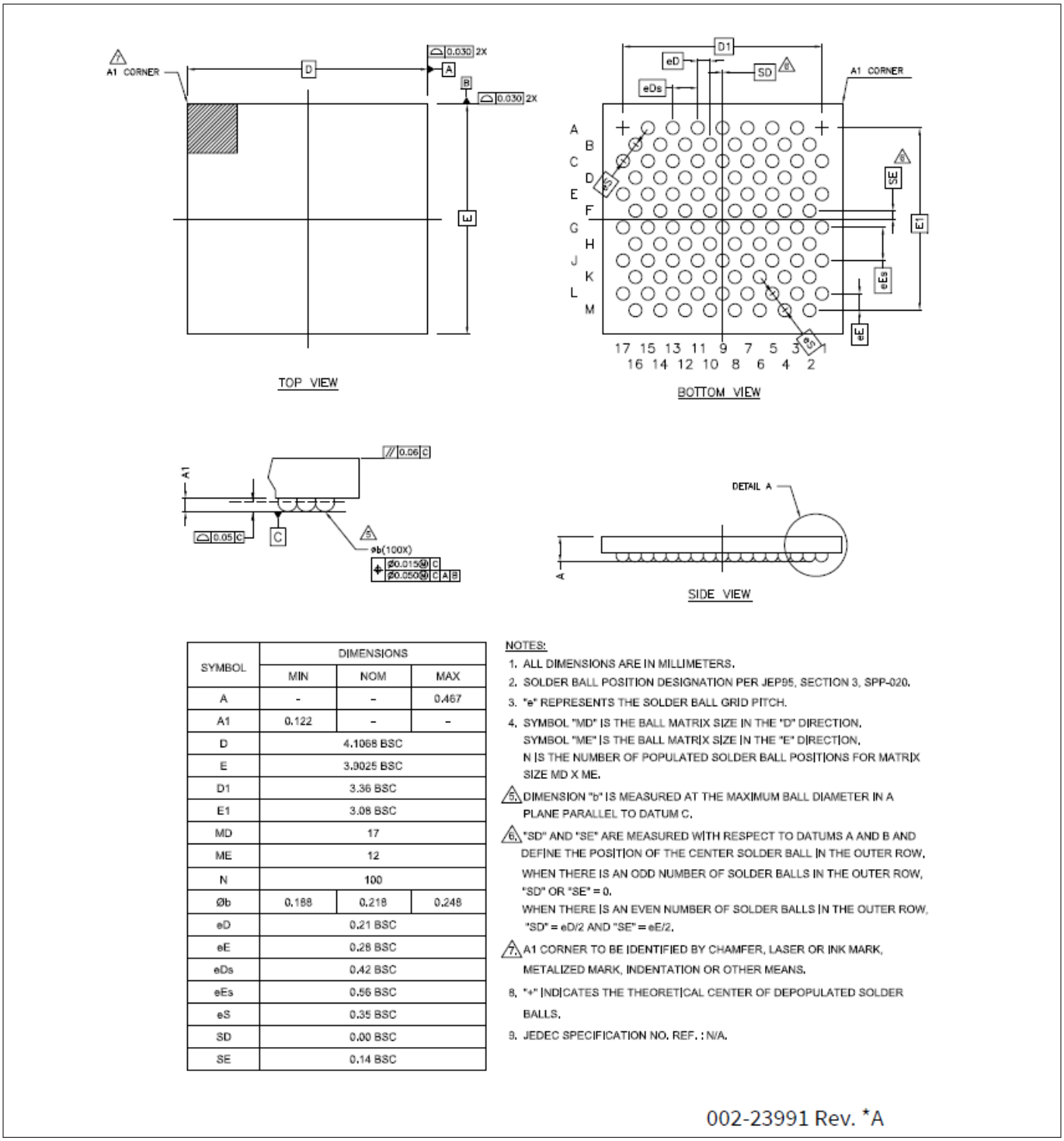

SYMBOL	DIMENSIONS		
	MIN	NOM	MAX
A	-	-	0.467
A1	0.122	-	-
D	4.1068 BSC		
E	3.9025 BSC		
D1	3.36 BSC		
E1	3.08 BSC		
MD	17		
ME	12		
N	100		
Øb	0.188	0.218	0.248
eD	0.21 BSC		
eE	0.28 BSC		
eDs	0.42 BSC		
eEs	0.56 BSC		
eS	0.35 BSC		
SD	0.00 BSC		
SE	0.14 BSC		

NOTES:

1. ALL DIMENSIONS ARE IN MILLIMETERS.
2. SOLDER BALL POSITION DESIGNATION PER JEP95, SECTION 3, SPP-020.
3. "e" REPRESENTS THE SOLDER BALL GRID PITCH.
4. SYMBOL "MD" IS THE BALL MATRIX SIZE IN THE "D" DIRECTION.
   SYMBOL "ME" IS THE BALL MATRIX SIZE IN THE "E" DIRECTION.
   N IS THE NUMBER OF POPULATED SOLDER BALL POSITIONS FOR MATRIX SIZE MD X ME.
5. DIMENSION "b" IS MEASURED AT THE MAXIMUM BALL DIAMETER IN A PLANE PARALLEL TO DATUM C.
6. "SD" AND "SE" ARE MEASURED WITH RESPECT TO DATUMS A AND B AND DEFINE THE POSITION OF THE CENTER SOLDER BALL IN THE OUTER ROW.
   WHEN THERE IS AN ODD NUMBER OF SOLDER BALLS IN THE OUTER ROW, "SD" OR "SE" = 0.
   WHEN THERE IS AN EVEN NUMBER OF SOLDER BALLS IN THE OUTER ROW, "SD" = eD/2 AND "SE" = eE/2.
7. A1 CORNER TO BE IDENTIFIED BY CHAMFER, LASER OR INK MARK, METALIZED MARK, INDENTATION OR OTHER MEANS.
8. "+" INDICATES THE THEORETICAL CENTER OF DEPOPULATED SOLDER BALLS.
9. JEDEC SPECIFICATION NO. REF. : N/A.

002-23991 Rev. *A

Figure 23 100-ball WLCSP (4.1068 × 3.9025 × 0.467 mm) FN100 (PSOC6A-2M) package outline (SG-XFWLB-100)

8 Packaging

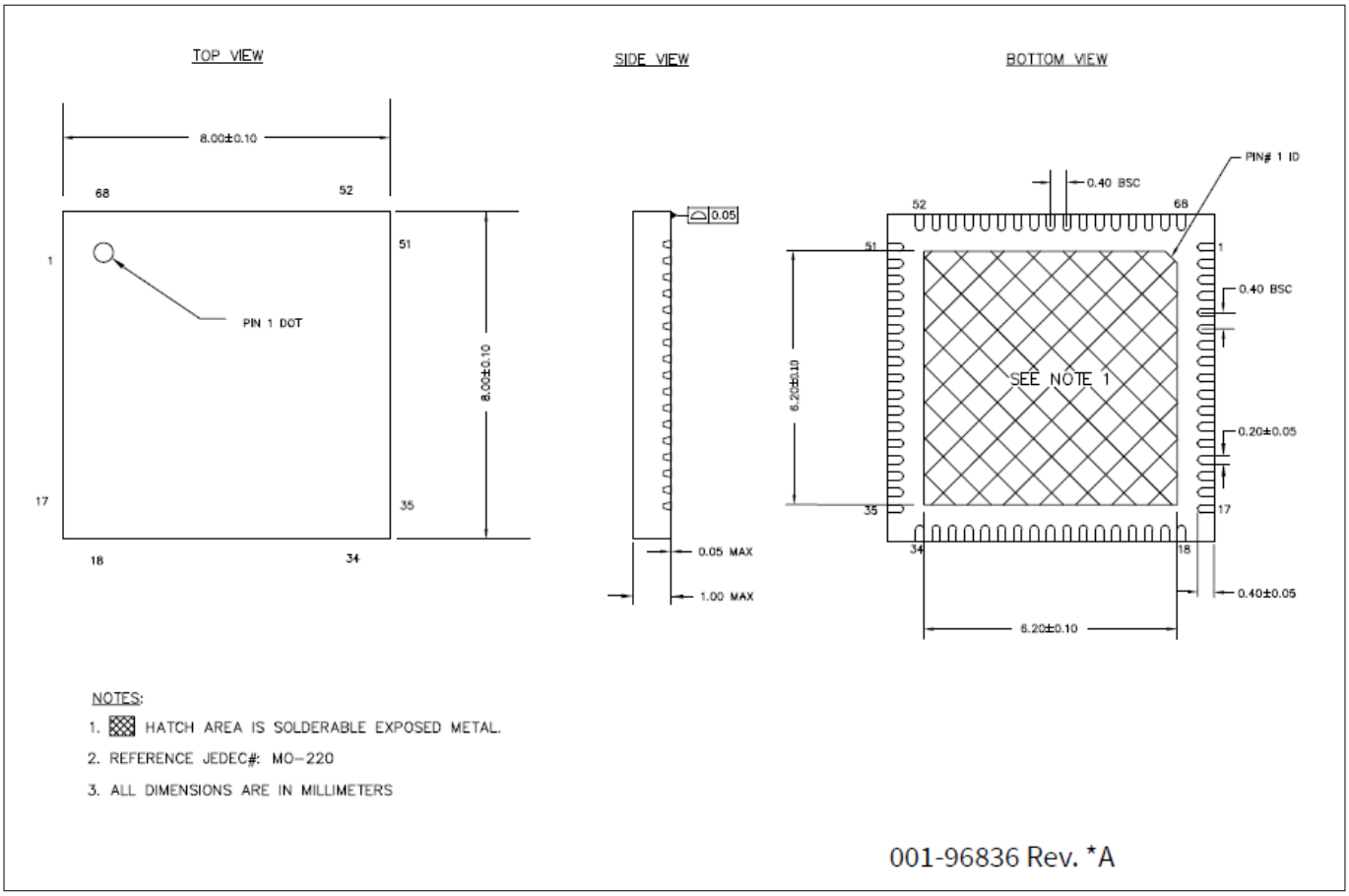

Figure 24 **68-pin QFN ((8 × 8 × 1.0 mm) LT68D, 6.2 × 6.2 mm E-Pad (Sawn type)) package outline (PG-VQFN-68)**

9 Acronyms

Table 55 Acronyms

Acronym	Description
3DES	triple DES (data encryption standard)
ADC	analog-to-digital converter
ADMA3	advanced DMA version 3, a Secure Digital data transfer mode
AES	advanced encryption standard
AHB	AMBA (advanced microcontroller bus architecture) high-performance bus, an Arm® data transfer bus
AMUX	analog multiplexer
AMUXBUS	analog multiplexer bus
API	application programming interface
Arm®	advanced RISC machine, a CPU architecture
BGA	ball grid array
BOD	brown-out detect
BREG	backup registers
BWC	backward compatibility (eMMC data transfer mode)
CAD	computer aided design
CCO	current controlled oscillator
ChaCha	a stream cipher
CM0+	Cortex®-M0+, an Arm® CPU
CM4	Cortex®-M4, an Arm® CPU
CMAC	cypher-based message authentication code
CMOS	complementary metal-oxide-semiconductor, a process technology for IC fabrication
CMRR	common-mode rejection ratio
CPU	central processing unit
CRC	cyclic redundancy check, an error-checking protocol
CSD	Capacitive Sigma-Delta
CSV	clock supervisor
CSX	Mutual capacitance sensing method. See also CSD
CTI	cross trigger interface
DAC	digital-to-analog converter, see also IDAC, VDAC
DAP	debug access port
DDR	double data rate
DES	data encryption standard
DFT	design for test

(table continues...)

9 Acronyms

Table 55 (continued) Acronyms

Acronym	Description
DMA	direct memory access, see also TD
DNL	differential nonlinearity, see also INL
DSI	digital system interconnect
DU	data unit
ECC	error correcting code
ECC	elliptic curve cryptography
ECO	external crystal oscillator
EEPROM	electrically erasable programmable read-only memory
EMI	electromagnetic interference
eMMC	embedded MultiMediaCard
ESD	electrostatic discharge
ETM	embedded trace macrocell
FIFO	first-in, first-out
FLL	frequency locked loop
FPU	floating-point unit
FS	full-speed
GND	Ground
GPIO	general-purpose input/output, applies to a PSOC™ pin
HMAC	Hash-based message authentication code
HSIOM	high-speed I/O matrix
I/O	input/output, see also GPIO, DIO, SIO, USBIO
I^2C, or IIC	Inter-Integrated Circuit, a communications protocol
I^2S	inter-IC sound
IC	integrated circuit
IDAC	current DAC, see also DAC, VDAC
IDE	integrated development environment
ILO	internal low-speed oscillator, see also IMO
IMO	internal main oscillator, see also ILO
INL	integral nonlinearity, see also DNL
IOSS	input output subsystem
IoT	internet of things
IPC	inter-processor communication
IRQ	interrupt request

(table continues...)

9 Acronyms

Table 55 (continued) Acronyms

Acronym	Description
ISR	interrupt service routine
ITM	instrumentation trace macrocell
JTAG	Joint Test Action Group
LCD	liquid crystal display
LIN	Local Interconnect Network, a communications protocol
LP	low power
LS	low-speed
LUT	lookup table
LVD	low-voltage detect, see also LVI
LVI	low-voltage interrupt
LVTTL	low-voltage transistor-transistor logic
MAC	multiply-accumulate
MCU	microcontroller unit
MCWDT	multi-counter watchdog timer
MISO	master-in slave-out
MMIO	memory-mapped input output
MOSI	master-out slave-in
MPU	memory protection unit
MSL	moisture sensitivity level
Msps	million samples per second
MTB	micro trace buffer
MUL	multiplier
NC	no connect
NMI	nonmaskable interrupt
NVIC	nested vectored interrupt controller
NVL	nonvolatile latch, see also WOL
OTP	one-time programmable
OVP	over voltage protection
OVT	overvoltage tolerant
PASS	programmable analog subsystem
PCB	printed circuit board
PCM	pulse code modulation
PDM	pulse density modulation

(table continues...)

9 Acronyms

Table 55 (continued) Acronyms

Acronym	Description
PHY	physical layer
PICU	port interrupt control unit
PLL	phase-locked loop
PMIC	power management integrated circuit
POR	power-on reset
PPU	peripheral protection unit
PRNG	pseudo random number generator
PSOC™	Programmable System-on-Chip™
PSRR	power supply rejection ratio
PWM	pulse-width modulator
QD	quadrature decoder
QSPI	quad serial peripheral interface
RAM	random-access memory
RISC	reduced-instruction-set computing
RMS	root-mean-square
ROM	read-only memory
RSA	Rivest–Shamir–Adleman, a public-key cryptography algorithm
RTC	real-time clock
RWW	read-while-write
RX	receive
S/H	sample and hold
SAR	successive approximation register
SARMUX	SAR ADC multiplexer bus
SC/CT	switched capacitor/continuous time
SCB	serial communication block
SCL	I^2C serial clock
SD	Secure Digital
SDA	I^2C serial data
SDR	single data rate
Sflash	supervisory flash
SHA	secure hash algorithm
SINAD	signal to noise and distortion ratio
SMPU	shared memory protection unit

(table continues...)

9 Acronyms

Table 55 (continued) Acronyms

Acronym	Description
SNR	signal-to-noise ratio
SOF	start of frame
SONOS	silicon-oxide-nitride-oxide-silicon, a flash memory technology
SPI	Serial Peripheral Interface, a communications protocol
SRAM	static random access memory
SROM	supervisory read-only memory
SRSS	system resources subsystem
SWD	serial wire debug, a test protocol
SWJ	serial wire JTAG
SWO	single wire output
SWV	single-wire viewer
TCPWM	timer, counter, pulse-width modulator
TDM	time division multiplexed
THD	total harmonic distortion
TQFP	thin quad flat package
TRM	technical reference manual
TRNG	true random number generator
TX	transmit
UART	Universal Asynchronous Transmitter Receiver, a communications protocol
UDB	universal digital block
ULP	ultra-low power
USB	Universal Serial Bus
WCO	watch crystal oscillator
WDT	watchdog timer
WIC	wakeup interrupt controller
WLCSP	wafer level chip scale package
XIP	execute-in-place
XRES	external reset input pin

10 Document conventions

10.1 Units of measure

Table 56 Units of measure

Symbol	Unit of measure
°C	degrees Celsius
dB	decibel
fF	femto farad
Hz	hertz
KB	1024 bytes
kbps	kilobits per second
khr	kilohour
kHz	kilohertz
kΩ	kilo ohm
ksps	kilosamples per second
LSB	least significant bit
Mbps	megabits per second
MHz	megahertz
MΩ	mega-ohm
Msps	megasamples per second
µA	microampere
µF	microfarad
µH	microhenry
µs	microsecond
µV	microvolt
µW	microwatt
mA	milliampere
ms	millisecond
mV	millivolt
nA	nanoampere
ns	nanosecond
nV	nanovolt
W	ohm
pF	picofarad
ppm	parts per million

(table continues...)

Table 56 (continued) Units of measure

Symbol	Unit of measure
ps	picosecond
s	second
sps	samples per second
sqrtHz	square root of hertz
V	volt

Revision history

Document revision	Date of release	Description of changes
**	2018-03-01	New datasheet for PSOC™ 6A-2M.
*A	03/16/2018	Updated the number of SCBs and removed CAN feature and specifications. Updated Multiple alternate functions.
*B	2018-05-16	Updated Features. Updated Block diagram. Updated IMO clock source, Watchdog Timer (WDT), Clock dividers, serial communication blocks (SCB). Updated GPIO. Updated Quad-SPI/Serial Memory Interface (SMIF). Added a note in Pinouts. Removed pins P14.1 and P14.0. Updated typ value for SID15. Updated Notes 2 and 3. Updated description for SID246. Updated Conditions for SID.CSD#15, SID.CSD#15A, and SID308A. Updated min and max values for SID314A, SID315A, and SID172B. Added SID308P Updated specs SID454, SID455, and SID408. Added Table 40.
*C	2018-05-24	Updated Block diagram. Updated CPU and memory subsystem. Updated SDHC Controllers. Updated SID262 description. Updated SDHC and eMMC Specifications
*D	2018-07-10	Added Security information (Protection Contexts and Protection Units). Changed Power Mode nomenclature to reflect Minimum Regulator Current mode instead of LPA/LPS. Revised SDHC and eMMC specs based on STA. Added note on drive setting valid for all AC specs. Added JTAG Boundary scan specs.
*E	2018-10-09	Added 128 TQFP and 100 WLCSP pin and package information. Removed SID65A. Updated SID75, SID76, and SID245 max values. Updated SID421 typ value. Added CY8C624ABZI-D44ES(T) in Ordering Information. Added part numbering nomenclature table. Added Errata

Revision history

Document revision	Date of release	Description of changes
*F	2019-01-21	Updated the title and replaced PSOC™ 6A-2M with PSOC™ CY8C62x8 and CY8C62xA PSOC™ 6 MCU: CY8C62x8, CY8C62xA Datasheet. Updated Features and Blocks and functionality. Updated Development ecosystem. Replaced “component” with “driver”. Updated System Resources and Fixed-function digital. Updated Pinouts Updated Power supply considerations. Updated Power Connections diagram. Updated CPU current and transition times table. Removed spec SID13A Updated Ordering Information.
*G	2019-05-03	Replaced “dual core” with “dual CPU.” Updated Block diagram. Updated CY8C62x8, CY8C62xA Pinouts and Multiple Alternate Functions.
*H	2019-09-16	Updated the title. Updated Ordering Information.
*I	2019-12-20	Updated Features. Updated Blocks and functionality and Functional description. Updated Pinouts and Power supply considerations.
*J	2020-03-27	Updated Features and Functional description Updated Pinouts Updated Electrical specifications based on Characterization: Added 2Ms/sec specs to SAR specs, updated SMIF, ECO, and SDHC specs Updated Ordering Information. Updated Errata.
*K	2020-04-17	Updated SAR ADC 1 Msps references to 2 Msps. Removed reference to e.MMC DDR mode. Edited SAR specs to split VDDA dependent specs into separate specs instead of having qualifying comments. Also moved Supply Range specs from Description column to Details/Conditions column. Added SAR ADC 2 Msps supply current specs. Updated SAR ADC input impedance RC values to support 9RC 2 Msps sampling.
*L	2020-06-11	Updated Development ecosystem, GPIO, and LCD sections. Added External Crystal Oscillators. Updated Errata.

Revision history

Document revision	Date of release	Description of changes
*M	2020-10-09	Updated Flexible clocking options and Block diagram. Updated list of application notes and links in PSOC™ 6 MCU resources. Updated ModusToolbox™ Software. Updated Clocking diagram. Updated Power supply considerations. Updated CPUs and added InterProcessor Communication (IPC). Updated Analog Subsystem diagram. Updated the XRES bullet in Reset, SID15 Description and Conditions, and System Resources (Power-On-Reset specifications). Updated SD Host Controllers and SD Host Controller and eMMC Specifications. Updated SID7A conditions, SID7C description, and SID8 conditions. Added footnote to TMCLK_SOC specs. Integrated ECO erratum into External Crystal Oscillators. Added ECO Usage Guidelines table.
*N	2021-06-03	Updated Security terminology to Infineon standards. Changed BLE references to Bluetooth® LE. Added Table 12 and in Electrical specifications. Added 68-QFN pin and package details. Updated Ordering Information.
*O	2021-10-19	Corrected typo in Table 7. Updated SIDC1 description.
*P	2021-11-24	Updated details/conditions for SID7A. Updated SID325U, SID328, and SID329 description.
*Q	2022-04-12	Updated eFuse information in the Memory section.
*R	2022-10-26	Added device identification and revision information in Features. Added spec SID415 and SID304P. Added footnote "Guaranteed by design, not production tested" for specs SID402 - SID412. Updated Clock system and PLL specifications. Updated Protection units.
*S	2025-11-06	Template update. Updated footnote numbers. PSOC™ 6 MCU resources ModusToolbox™ software CAPSENSE™ subsystem
*T	2026-06-19	Updated Features Updated Pinouts Updated USB Full-Speed device/host Interface
*U	2026-09-08	Updated Table 49 Updated Functional description Updated PSOC™ 6 MCU resources

Trademarks

PSOC™, formerly known as PSoC™, is a trademark of Infineon Technologies. Any references to PSoC™ in this document or others shall be deemed to refer to PSOC™.

Trademarks

All referenced product or service names and trademarks are the property of their respective owners.

Edition 2026-09-08

Published by

Infineon Technologies AG

81726 Munich, Germany

© 2026 Infineon Technologies AG

All Rights Reserved.

Do you have a question about any aspect of this document?

Email: erratum@infineon.com

Document reference
IFX-nkm1721972266787

Important notice

Products which may also include samples and may be comprised of hardware or software or both ("Product(s)") are sold or provided and delivered by Infineon Technologies AG and its affiliates ("Infineon") subject to the terms and conditions of the frame supply contract or other written agreement(s) executed by a customer and Infineon or, in the absence of the foregoing, the applicable Sales Conditions of Infineon. General terms and conditions of a customer or deviations from applicable Sales Conditions of Infineon shall only be binding for Infineon if and to the extent Infineon has given its express written consent.

For the avoidance of doubt, Infineon disclaims all warranties of non-infringement of third-party rights and implied warranties such as warranties of fitness for a specific use/purpose or merchantability. Infineon shall not be responsible for any information with respect to samples, the application or customer's specific use of any Product or for any examples or typical values given in this document.

If this document is marked as 'Preliminary', 'Target', 'Draft' or 'Proposal', Infineon reserves the right to change all information given in this document at any time without notice. Subject to the development and release of a Product for series supply by Infineon, the technical specifications of the Product are set forth in the relevant datasheet provided by Infineon without such marking.

The data contained in this document is exclusively intended for technically qualified and skilled customer representatives. It is the responsibility of the customer to evaluate the suitability of the Product for the intended application and the customer's specific use and to verify all relevant technical data contained in this document in the intended application and the customer's specific use. The customer is responsible for properly designing, programming, and testing the functionality and safety of the intended application, as well as complying with any legal requirements related to its use.

Unless otherwise explicitly approved by Infineon, Products may not be used in any application where a failure of the Products or any consequences of the use thereof can reasonably be expected to result in personal injury.

However, the foregoing shall not prevent the customer from using any Product in such fields of use that Infineon has explicitly designed and sold it for, provided that the overall responsibility for the application lies with the customer. Infineon expressly reserves the right to use its content for commercial text and data mining (TDM) according to applicable laws, e.g. Section 44b of the German Copyright Act (UrhG). If the Product includes security features:

Because no computing device can be absolutely secure, and despite security measures implemented in the Product, Infineon does not guarantee that the Product will be free from intrusion, data theft or loss, or other breaches ("Security Breaches"), and Infineon shall have no liability arising out of any Security Breaches.

If this document includes or references software:

The software is owned by Infineon under the intellectual property laws and treaties of the United States, Germany, and other countries worldwide. All rights reserved. Therefore, you may use the software only as provided in the software license agreement accompanying the software.

If no software license agreement applies, Infineon hereby grants you a personal, non-exclusive, non-transferable license (without the right to sublicense) under its intellectual property rights in the software (a) for software provided in source code form, to modify and reproduce the software solely for use with Infineon hardware products, only internally within your organization, and (b) to distribute the software in binary code form externally to end users, solely for use on Infineon hardware products. Any other use, reproduction, modification, translation, or compilation of the software is prohibited.

For further information on the Product, technology, delivery terms and conditions, and prices, please contact your nearest Infineon office or visit www.infineon.com.