CUI Devices is now Same Sky! Learn More

MODEL: CPG-01-TH-B | DESCRIPTION: POGO PIN

FEATURES

- pogo pin
- through hole
- gold plated
- 10 mm recommended working height



RoHS

SPECIFICATIONS

parameter	conditions/description	min	typ	max	units
rated voltage				12	Vdc
rated current				2	A
contact resistance	at working height			50	mΩ
force at mid stroke	at working height	80	100	120	gf
initial force			40		gf
mid stroke			1.1		mm
full stroke			1.9		mm
working height			10		mm
life		10,000			cycles
operating temperature		-20		85	°C
RoHS	yes				

MECHANICAL DRAWING

units: mm
tolerance:
X≤10: ±0.10 mm
10<X20: ±0.15 mm
PCB: ±0.05 mm
unless otherwise noted

DESCRIPTION	MATERIAL	PLATING/COLOR
barrel	brass alloy	10 µ" min gold over 50~120 µ" nickel
plunger	brass alloy	10 µ" min gold over 50~120 µ" nickel
spring	SUS304	

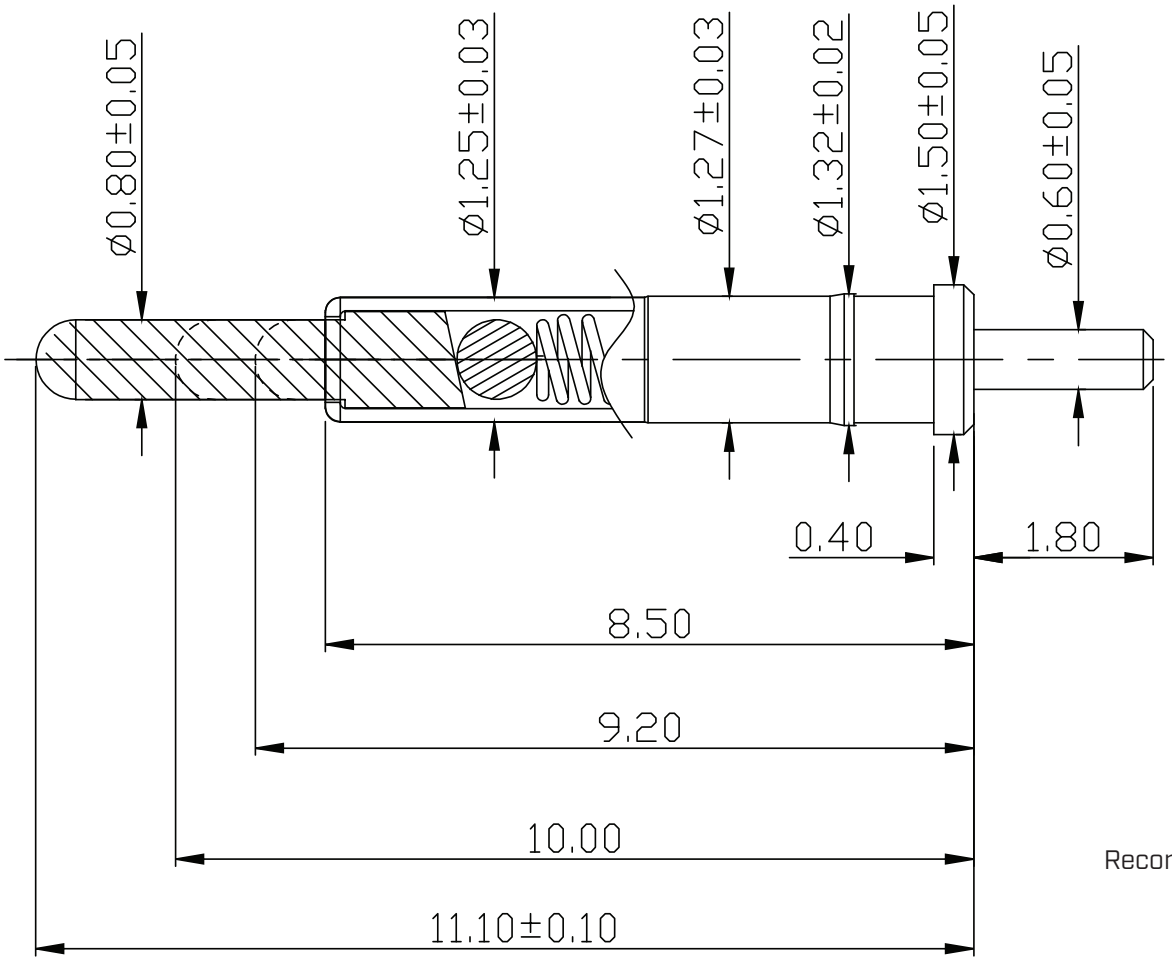

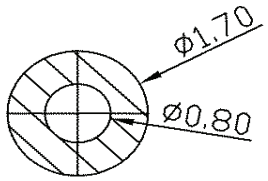

Recommended PCB Layout
Top View

REVISION HISTORY

rev.	description	date
1.0	initial release	01/17/2024
1.01	CUI Devices rebranded to Same Sky	09/12/2024
1.02	reduced gold plating to 10 µ"	01/05/2026

The revision history provided is for informational purposes only and is believed to be accurate.

same sky

Same Sky offers a one (1) year limited warranty. Complete warranty information is listed on our website.

Same Sky reserves the right to make changes to the product at any time without notice. Information provided by Same Sky is believed to be accurate and reliable. However, no responsibility is assumed by Same Sky for its use, nor for any infringements of patents or other rights of third parties which may result from its use.

Same Sky products are not authorized or warranted for use as critical components in equipment that requires an extremely high level of reliability. A critical component is any component of a life support device or system whose failure to perform can be reasonably expected to cause the failure of the life support device or system, or to affect its safety or effectiveness.

sameskydevices.com