CUI Devices is now Same Sky! Learn More

MODEL: CMM-3526AB-381Z-TR | DESCRIPTION: MEMS MICROPHONE

FEATURES

- bottom port
- acoustic overload point of 128 dB SPL
- sensitivity -38±1 dBV



RoHS

ELECTRICAL

parameter	conditions/description	min	typ	max	units
directivity	omnidirectional				
sensitivity (S)	at 94 dB SPL, 1 kHz	-39	-38	-37	dB
supply voltage (V_{DD})		1.6	2.0	3.6	V
current consumption (I_{DSS})	V_{DD} = 2.0 V	100	155	250	µA
frequency (f)		20		10,000	Hz
signal to noise ratio (S/N)	BW = 20 Hz~20 kHz (A-weighted)	62	64	66	dBA
total harmonic distortion (THD)	at 94 dB SPL, 1 kHz	0.05	0.15	0.50	%
acoustic overload point (AOP)	at 10% THD, 1 kHz	126	128	130	dB SPL
phase	20 Hz~10 kHz at 94 dB	-5	0	5	deg
output impedance (Zout)	at 1 kHz	60	100	300	Ω
dc output	V_{DD}=2.0 V	0.60	0.85	1.30	V
PSRR	200 mVp-p sine wave @ 1 kHz, V_{DD} = 2.0 V	65	75	85	dB
PSR	100 mVp-p square wave @ 217 Hz, V_{DD} = 2.0 V (A-weighted)	-115	-105	-95	dBV(A)

Notes: 1. All specifications measured at 23±2 °C, humidity at 55±20%, unless otherwise noted.

ENVIRONMENTAL

parameter	conditions/description	min	typ	max	units
operating temperature		-40		100	°C
storage temperature	in packaging	-40		100	°C
RoHS	yes				

MECHANICAL

parameter	conditions/description	min	typ	max	units
dimensions	3.50 x 2.65 x 0.98				mm
acoustic port	bottom				
terminals	surface mount				
weight		0.0145	0.0175	0.0205	g

MECHANICAL DRAWING

units: mm
tolerance: ±0.1 mm

TERMINAL CONNECTIONS	
TERM.	FUNCTION
1	output
2	GND
3	GND
4	GND
5	V_{DD}

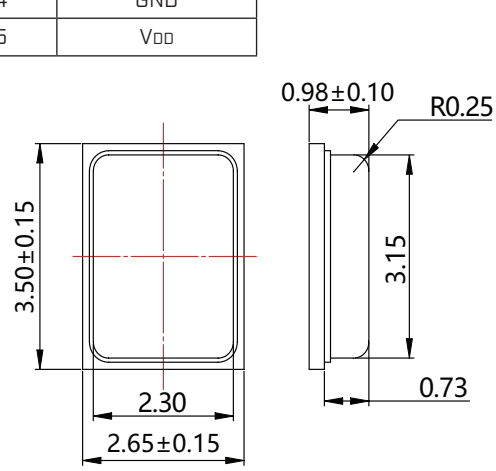

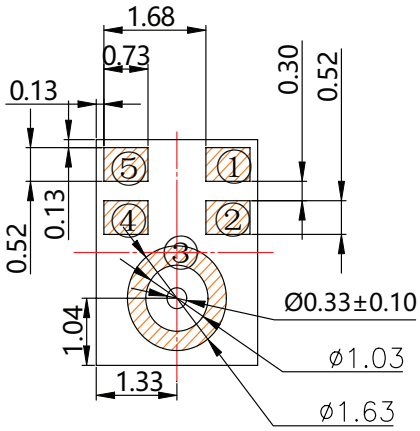

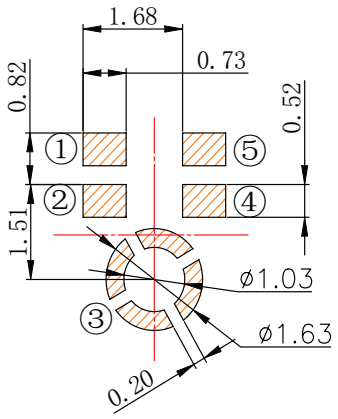

Recommended Stencil Pattern
Top View

INTERFACE CIRCUIT

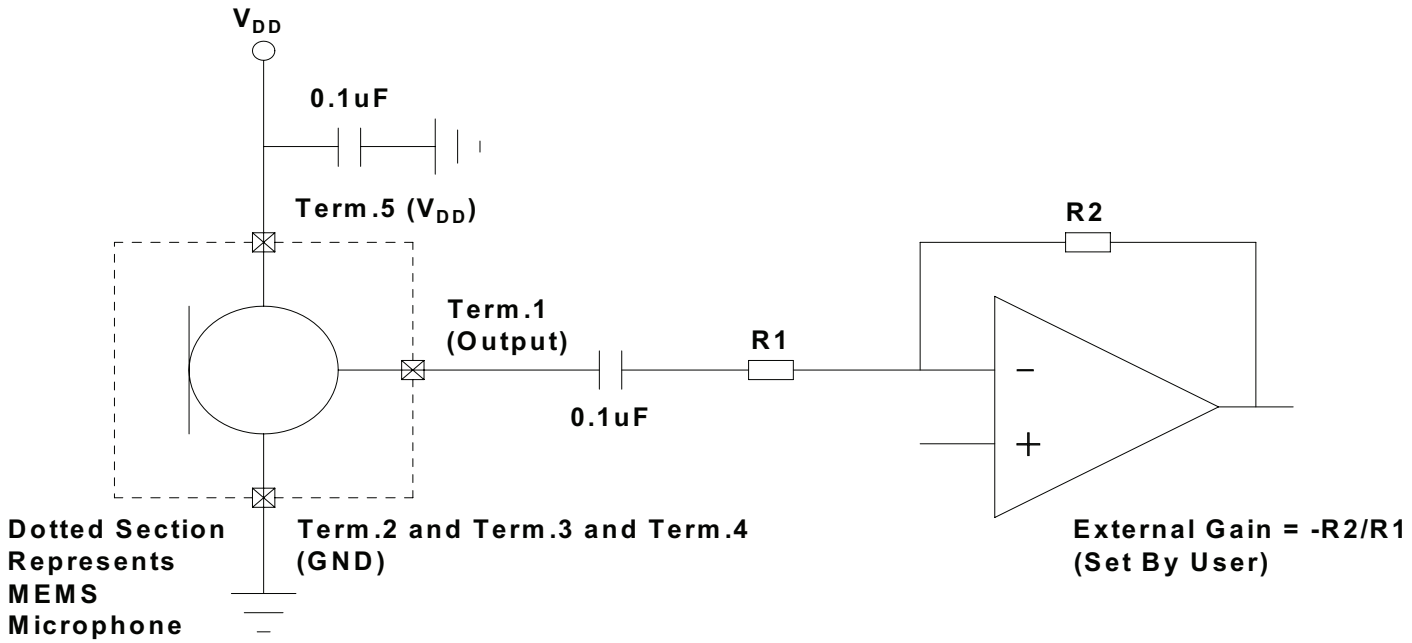

FREQUENCY RESPONSE CURVE

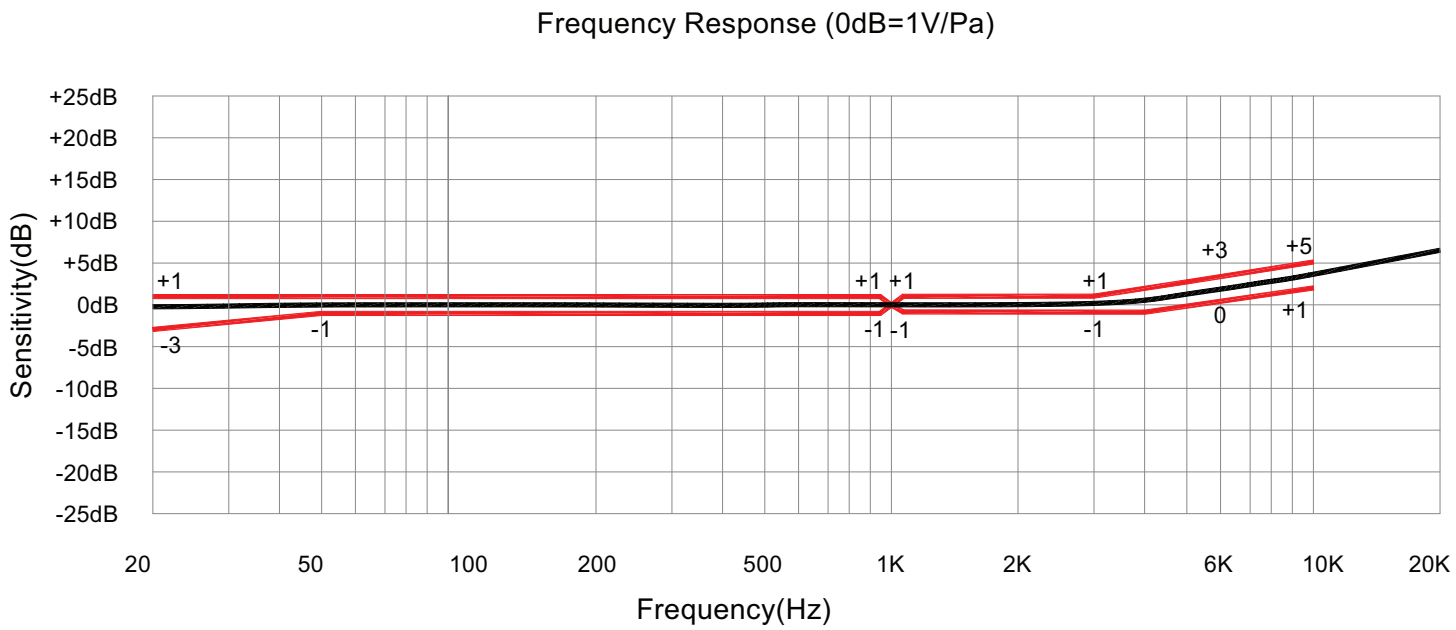

PHASE CURVE

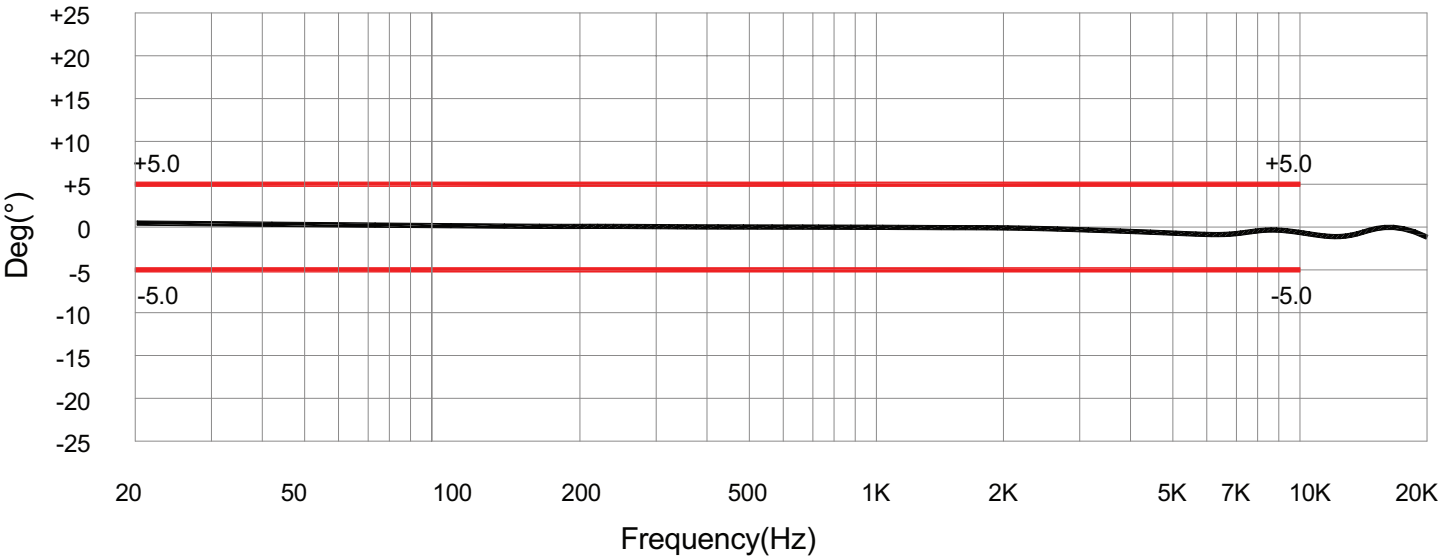

SOLDERABILITY

parameter	conditions/description	min	typ	max	units
reflow soldering[2]	see reflow profile			260	°C

Note: 2. Not recommended to exceed 3 reflow cycles.

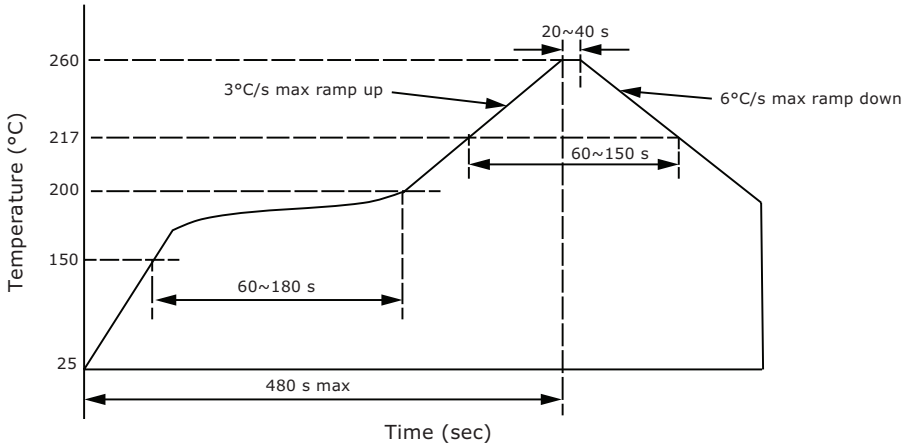

HANDLING RECOMMENDATIONS

1. Not recommended to blow air heavily over acoustic port as debris could impact mic function.
2. Not suitable for wash process after reflow.
3. Not recommended to brush board with or without solvents after reflow process.
4. Not recommended to directly expose to ultrasonic processing or cleaning.
5. Not recommended to inserty any object in port of device at any time.
6. Not recommended to apply over 30 psi of air pressure into the port hole.
7. Not recommended to pull a vacuum over port hole.
8. Not recommended to apply a vacuum when repackaging into sealed bag a rate faster than 0.5 atm/sec.
9. Not recommended to clean table or carried plate with air guarding system that could induce particle floating inside mic.

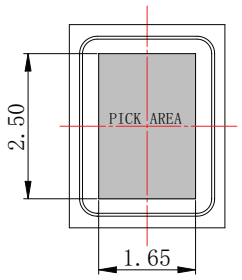

Recommended Vacuum Nozzle Pickup
Top View

PACKAGING

parameter	conditions/description	min	typ	max	units
reel size	Ø178 mm				
reel QTY	1,000 pcs per reel				
carton size	415 x 235 x 215 mm				
carton QTY	20,000 pcs				

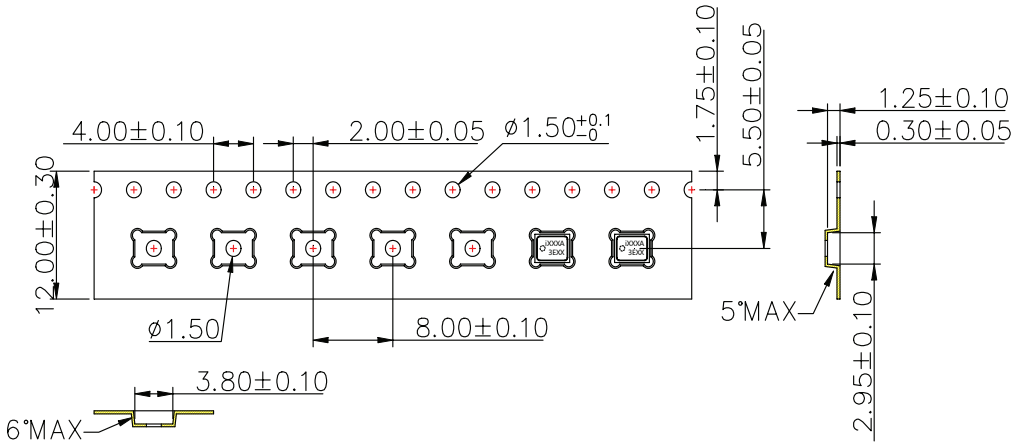

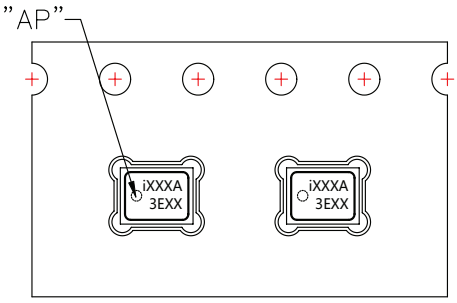

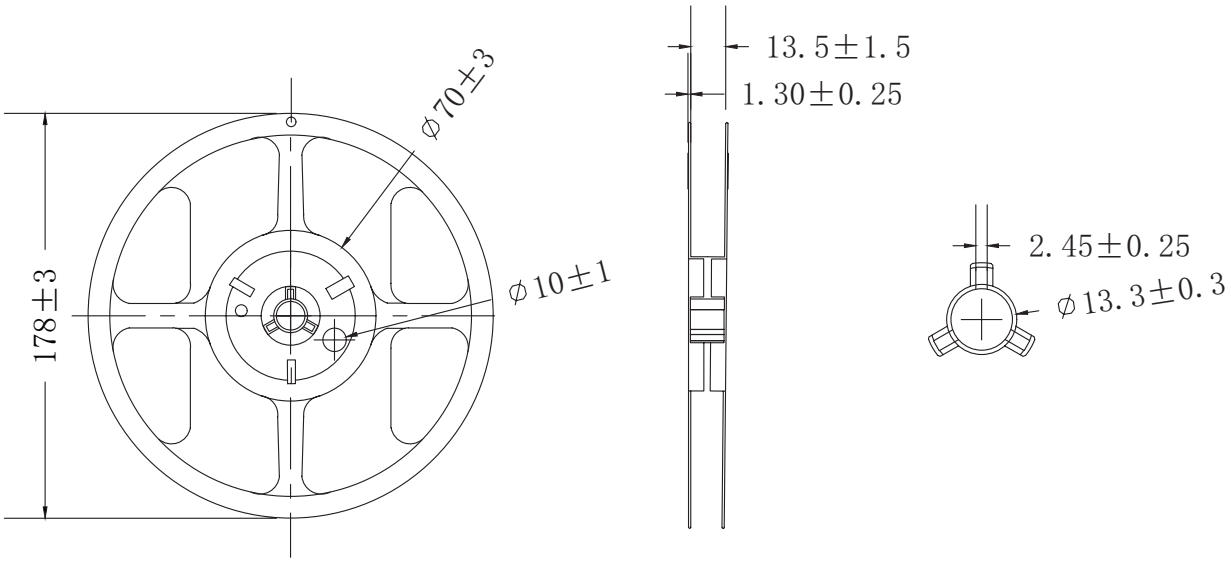

REVISION HISTORY

rev.	description	date
1.0	initial release	09/14/2026

The revision history provided is for informational purposes only and is believed to be accurate.

same sky

Same Sky offers a one (1) year limited warranty. Complete warranty information is listed on our website.

Same Sky reserves the right to make changes to the product at any time without notice. Information provided by Same Sky is believed to be accurate and reliable. However, no responsibility is assumed by Same Sky for its use, nor for any infringements of patents or other rights of third parties which may result from its use.

Same Sky products are not authorized or warranted for use as critical components in equipment that requires an extremely high level of reliability. A critical component is any component of a life support device or system whose failure to perform can be reasonably expected to cause the failure of the life support device or system, or to affect its safety or effectiveness.

sameskydevices.com