CUI Devices is now Same Sky! Learn More

same sky

SERIES: CDM501 | DESCRIPTION: M5 CONNECTOR

FEATURES

- M5 male connector
- A Code
- panel mount
- IP67



RoHS IP67

SPECIFICATIONS

parameter	conditions/description	min	typ	max	units
rated voltage				60	V
rated current				1	A
withstanding voltage	for 1 minute		600		Vac
contact resistance				5	mΩ
insulation resistance	at 500 Vdc for 1 minute	100			MΩ
insertion/withdrawal force		0.3		1.5	kgf
operating temperature		-25		80	°C
life		100			cycles
safety approvals	compliant with IEC61076-2-105				
flammability rating	see material table				
RoHS	yes				
IP level	IP67 (in mated condition)				
packaging	carton size: 280 x 225 x 340 mm carton QTY: 1,680 pcs per carton				

SOLDERABILITY

parameter	conditions/description	min	typ	max	units
hand soldering	for maximum 5 seconds		260		°C

PART NUMBER KEY

CDM501 - XXX - MP - F505 - 67

Base Number

No. of Poles:
03A = 3 (A-Coding)
04A = 4 (A-Coding)

MECHANICAL DRAWING

units: mm
tolerance:
0.5<X≤6.0: ±0.1 mm
6.0<X≤30.0: ±0.2 mm
unless otherwise noted

ITEM	DESCRIPTION	MATERIAL	PLATING/COLOR
A	M5x0.5 screw	brass	nickel
B	terminals; male	brass	gold
C	housing; male	PA66 (UL94V-0)	black
D	M5x0.5 nut	brass	nickel
E	resin	epoxy resin	black
F	o-ring	FKM	black

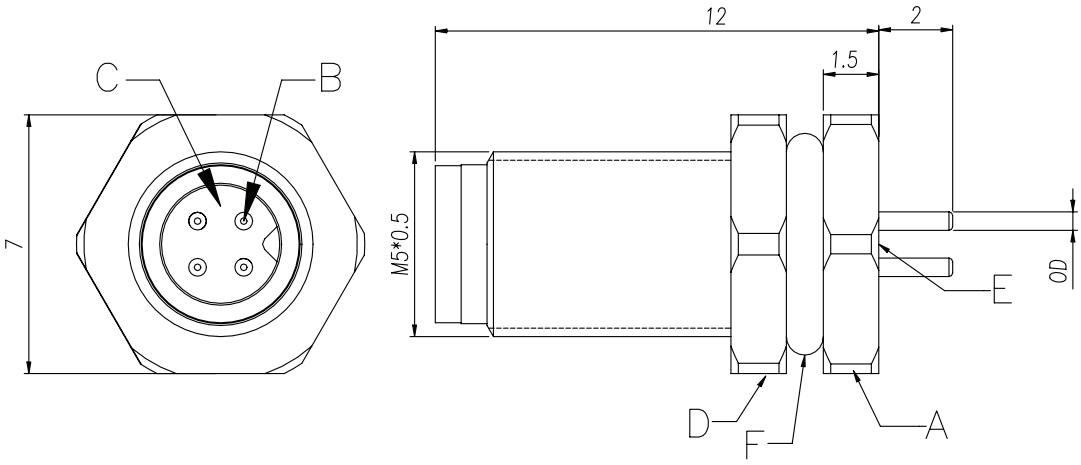

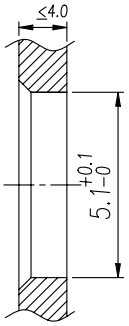

Recommended Panel Cutout

No. of Poles	3	4
Coding	 A-Coding	 A-Coding
Pin Diameter	0.5 mm	0.5 mm
Recommended PCB Layout Top View	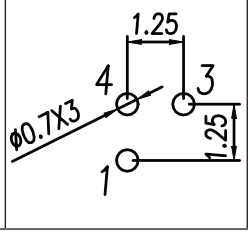	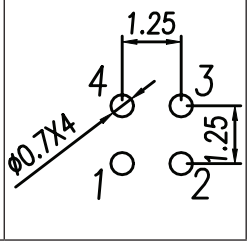

REVISION HISTORY

rev.	description	date
1.0	initial release	12/12/2023
1.01	CUI Devices rebranded to Same Sky	09/12/2024

The revision history provided is for informational purposes only and is believed to be accurate.

same sky

Same Sky offers a one (1) year limited warranty. Complete warranty information is listed on our website.

Same Sky reserves the right to make changes to the product at any time without notice. Information provided by Same Sky is believed to be accurate and reliable. However, no responsibility is assumed by Same Sky for its use, nor for any infringements of patents or other rights of third parties which may result from its use.

Same Sky products are not authorized or warranted for use as critical components in equipment that requires an extremely high level of reliability. A critical component is any component of a life support device or system whose failure to perform can be reasonably expected to cause the failure of the life support device or system, or to affect its safety or effectiveness.

sameskydevices.com