

features

- Stable fusing characteristics due to original technology
- Suitable for reflow and flow soldering
- Products meet EU RoHS requirements
- Excellent anti-sulfuration characteristics due to using high sulfuration-proof material

dimensions and construction

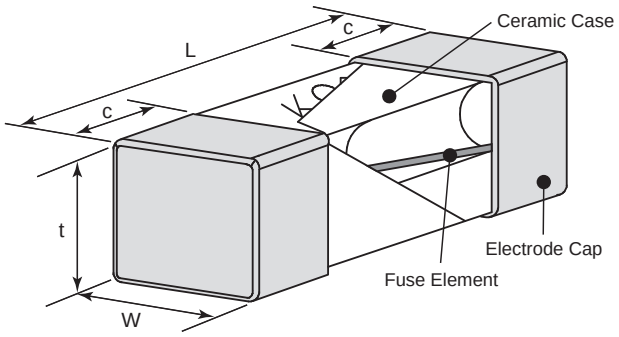

Type	Dimensions inches (mm)			
	L	W	t	c
CCF1F (2410)	.236±.008 (6.0±0.2)	.098±.008 (2.5±0.2)	.098±.008 (2.5±0.2)	.055±.008 (1.4±0.2)

ordering information

CCF	1	F	1	T	TE
Type	Style	Fusing Characteristic	Rated Current	Termination Surface Material	Packaging
		F: Normal blow (Anti-sulfuration)		T: Sn	TE: 4mm pitch plastic embossed BK: Bulk

For further information on packaging, please refer to Appendix A.
Contact us when you have control request for environmental hazardous material other than the substance specified by EU RoHS.

applications and ratings

Part Designation	Current Rating	Voltage Rating	Interrupting Capacity	Fusing Characteristics		Internal R. (mΩ) Max.	Normal Melting I^2t (A^2, sec.)	Operating Temperature Range
				Rated Current	Fusing Time			
CCF1F0.4	0.4A	UL(c-UL) AC 125V DC 125V	UL(c-UL) AC125V 50A DC125V 50A	UL(c-UL) 100% 200%	4 hour min. 60 sec. max.	650	0.024	-55°C to +125°C
CCF1F0.5	0.5A					510	0.030	
CCF1F0.63	0.63A					390	0.052	
CCF1F0.8	0.8A					250	0.125	
CCF1F1	1A					90.4	0.156	
CCF1F1.25	1.25A					75.9	0.220	
CCF1F1.6	1.6A					59.3	0.513	
CCF1F2	2A					42.9	0.814	
CCF1F2.5	2.5A					36.6	1.31	

Specifications given herein may be changed at any time without prior notice. Please confirm technical specifications before you order and/or use.

applications and ratings (continued)

Part Designation	Current Rating	Voltage Rating	Interrupting Capacity	Fusing Characteristics		Internal R. (mΩ) Max.	Normal Melting I^2t (A^2, sec.)	Operating Temperature Range
				Rated Current	Fusing Time			
CCF1F3.15	3.15A	UL(c-UL) AC 125V DC 125V	UL(c-UL) AC125V 50A DC125V 50A	UL(c-UL) 100% 200%	4 hour min. 60 sec. max.	26.0	2.37	-55°C to +125°C
CCF1F4	4A					20.1	3.85	
CCF1F5	5A					15.3	6.5	
CCF1F6.3	6.3A					11.4	10.6	
CCF1F7	7A					10.6	12.8	
CCF1F8	8A					9.5	17.0	
CCF1F10	10A					7.5	27.7	
CCF1F12	12A	UL(c-UL) AC 65V DC 65V	UL(c-UL) AC65V 50A DC65V 50A			4.5	73.5	
CCF1F15	15A					3.5	125.5	

environmental applications

Derating Curve

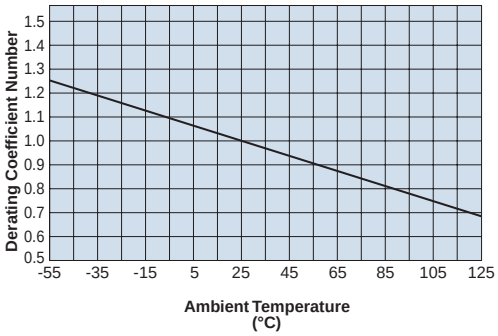

Stationary Current: Regard the peak of stationary current waveform as stationary current value when the stationary current is repeated pulse. Normal derating of this product should be 0.7max. as standards.

Deratings by ambient temperatures. When using the products at the temperatures other than normal temperature (25°C ± 5°), temperature adjustment will be required. Please refer the derating coefficient as shown in the figure.

Fusing Characteristics

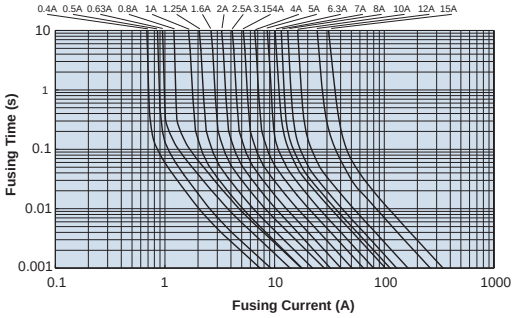

Performance Characteristics

Parameter	Requirements		Test Method
	Limit	Typical	
Fusing Characteristics	Within specified time. Insulation resistance shall not be less than 0.1MΩ	—	Fusing time measured under rated current x 200%) (at 25°C)
Surface Temperature Rise	Maximum temperature rise 75°C and not fusing (all the rating)	—	Surface temperature should be measured by rated current x 100% hour
Bending Test	No mechanical damage	—	Distance between holding points 90mm, bent by 3mm at rate of 1mm/second
Resistance to Soldering Heat	ΔR±10%	±3%	260°C ± 5°C, 10 seconds ± 0.5 seconds
Solderability	95% coverage minimum	—	235°C ± 5°C, 3 seconds ± 0.5 seconds
Load Life	ΔR±10%	±5%	70°C ± 2°C, 1000 hours, rated current x 70%, 1.5 hr ON, 0.5 hr OFF cycle
Load Life Moisture	ΔR±10%	±5%	40°C ± 2°C, 90 - 95% RH, 1000 hours, rated current x 70%, 1.5 hr ON, 0.5 hr OFF cycle
Rapid Change of Temperature	ΔR±10%	±5%	-55°C (30 minutes), +125°C (30 minutes), 100 cycles
Sulfuration Test	ΔR±10%	—	Soaked in industrial oil with 3.5% sulfur concentration, 105°C±3°C, 500 hours

Specifications given herein may be changed at any time without prior notice. Please confirm technical specifications before you order and/or use.