SMT Power Inductors

Size 10.4 x 10.4 x 4.8 (mm)

Series/Type: **B82464P4**

Date: June 2026

© TDK Electronics AG 2026. Reproduction, publication and dissemination of this publication, enclosures hereto and the information contained therein without TDK Electronics' prior express consent is prohibited.

SMD

Rated inductance 0.82 ... 1000 µH
Rated current 0.34 ... 7.5 A



Construction

- Ferrite core
- Magnetically shielded
- Winding: enamel copper wire
- Winding soldered to terminals
- Injection molded base

Features

- High mechanical stability
- Temperature range up to +150 °C
- High rated current
- Low DC resistance
- Suitable for lead-free reflow soldering as referenced in JEDEC J-STD-020
- Qualification to AEC-Q200
- RoHS-compatible

Applications

- Filtering of supply voltages
- Coupling, decoupling
- DC/DC converters
- Automotive electronics

Terminals

- Base material Cu
- Layer composition Ni, Sn (lead-free)
- Electro-plated

Marking

- Marking on component:
  L value (µH, coded),
  manufacturing date (YWWD)
- Minimum data on reel:
  Manufacturer, ordering code, L value,
  quantity, date of packing

Delivery mode and packing unit

- 24-mm blister tape, wound on 330-mm ∅ reel
- Packing unit: 750 pcs./reel

SMD

Dimensional drawing and layout recommendation

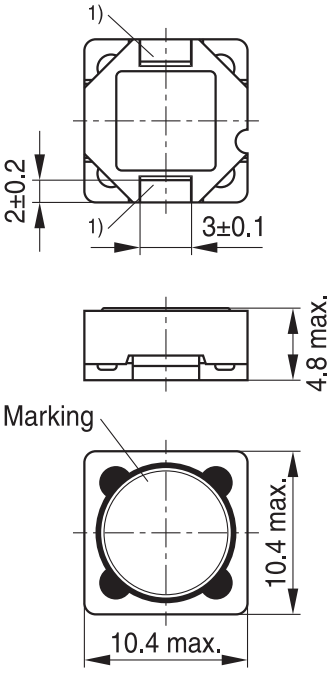

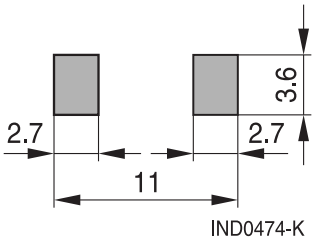

1) Soldering area

IND0910-K-E

Dimensions in mm

Taping and packing

Blister tape

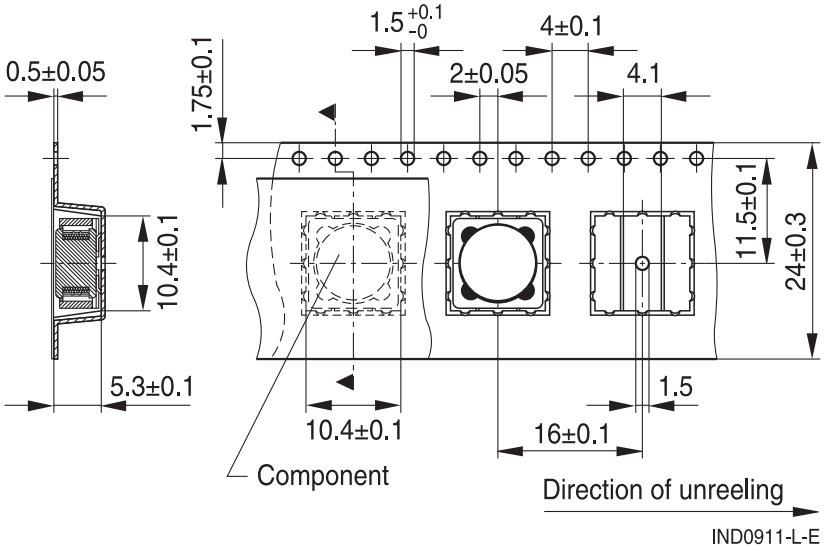

Reel

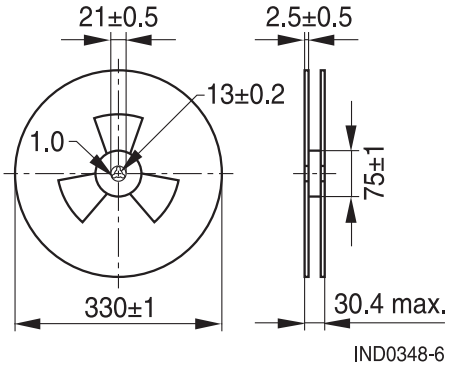

Dimensions in mm

SMD

Technical data and measuring conditions

Rated inductance L_R	Measured with LCR meter Agilent 4284A at frequency f_L, 0.1 V, +20 °C
Rated temperature T_R	+85 °C
Rated current I_R	Max. permissible DC with temperature increase of ≤ 40 K at rated temperature
Saturation current I_{sat}	Max. permissible DC with inductance decrease $\Delta L/L_0$ of approx. 10%
DC resistance R_{max}	Measured at +20 °C
Solderability (lead-free)	Dip and look method Sn95.5Ag3.8Cu0.7: +(245 ±5) °C, (5 ±0.3) s Wetting of soldering area ≥ 90% (based on IEC 60068-2-58)
Resistance to soldering heat	+260 °C, 40 s (as referenced in JEDEC J-STD-020)
Climatic category	55/150/56 (to IEC 60068-1)
Storage conditions	Mounted: –55 °C … +150 °C Packaged: –25 °C … +40 °C, ≤ 75% RH
Weight	Approx. 2 g

Characteristics and ordering codes

L_R µH	Tolerance	f_L MHz	I_R A	I_{sat} A	R_{max} Ω	Ordering code
0.82	±20% ≙ M	0.1	7.50	10.5	0.007	B82464P4821M000
1.0		0.1	7.50	10.0	0.007	B82464P4102M000
1.5		0.1	7.00	8.5	0.009	B82464P4152M000
2.2		0.1	6.50	7.0	0.010	B82464P4222M000
3.3		0.1	5.50	5.9	0.012	B82464P4332M000
4.7		0.1	4.90	5.2	0.015	B82464P4472M000
6.8		0.1	4.30	4.6	0.020	B82464P4682M000
10		0.1	3.40	3.5	0.030	B82464P4103M000
15		0.1	2.75	3.1	0.040	B82464P4153M000
22		0.1	2.25	2.5	0.052	B82464P4223M000
33		0.1	1.85	2.1	0.075	B82464P4333M000
47		0.1	1.55	1.8	0.095	B82464P4473M000
68		0.1	1.30	1.45	0.13	B82464P4683M000
100		0.1	1.05	1.15	0.22	B82464P4104M000
150		0.1	0.85	0.90	0.32	B82464P4154M000
220		0.1	0.70	0.75	0.44	B82464P4224M000
330		0.1	0.59	0.65	0.65	B82464P4334M000
470		0.1	0.50	0.55	0.93	B82464P4474M000
680		0.1	0.42	0.46	1.30	B82464P4684M000
1000		0.1	0.34	0.35	2.20	B82464P4105M000

SMD

Impedance versus frequency
(typical curve)

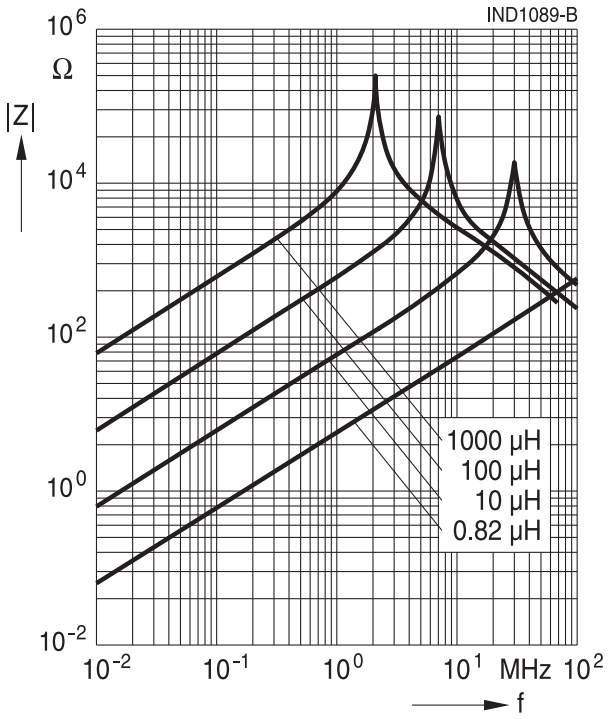

Current derating I_{op}/I_R
versus ambient temperature T_A
(rated temperature T_R = +85 °C)

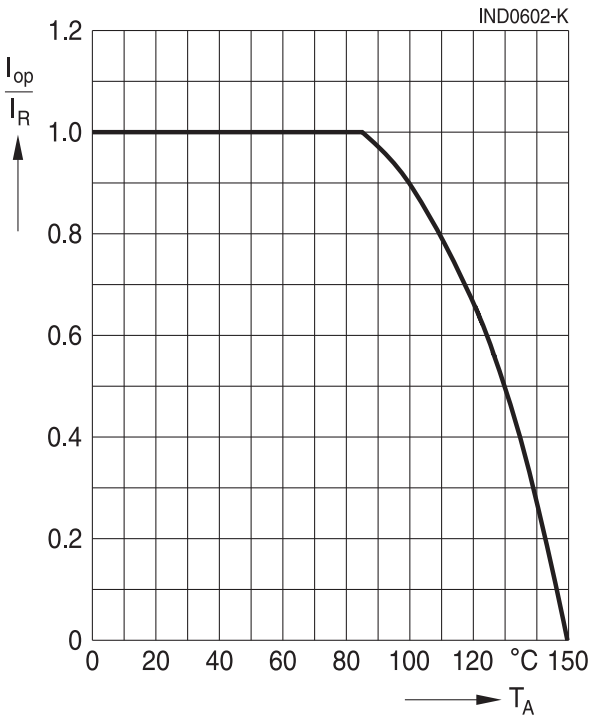

Inductance derating versus load current
(typical curve)

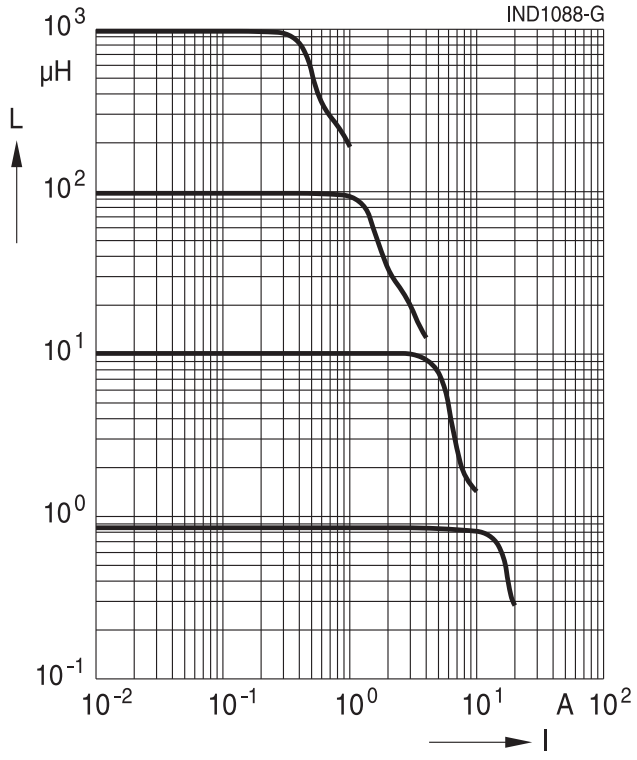

Cautions and warnings

- Please note the recommendations in our Inductors data book (latest edition), online catalogs and in the data sheets.
  - Particular attention should be paid to the derating curves, if given. Derating applies in the case the ambient temperature in application exceeds the rated temperature of the component.
  - Ensure the operation temperature of the component in application not to exceed the maximum specified value or the upper climatic category temperature.
  - The soldering conditions should also be observed. Temperatures quoted in relation to wave soldering refer to the pins only. Temperatures specified in relation to reflow soldering can also refer to the pins or terminals for products with larger thermal mass, as in such cases, the temperature difference to the top of the component is too big (e.g., high proportion of core within the component).

- If the components are to be washed or varnished it is necessary to check whether the washing or varnish agent that is used has a negative effect on the wire insulation, any plastics that are used, or on glued joints. It is possible for washing or varnish agent residues to have a negative effect in the long-term on wire insulation.
  Washing processes may damage the product due to the possible static or cyclic mechanical loads (e.g. ultrasonic cleaning). They may cause cracks to develop on the product and its parts, which might lead to reduced reliability or lifetime.

- The following points must be observed if the components are potted, sealed, or varnished in customer applications:
  - Many potting, sealing, or varnishing materials shrink as they harden. They therefore exert a pressure on the plastic housing or core. This pressure can have a deleterious effect on electrical properties, and in extreme cases can damage the core or plastic housing mechanically.
  - It is necessary to check whether the potting, sealing, or varnishing materials used attack or destroy the wire, wire insulation, plastics or glue.
  - The effect of the potting, sealing, or varnishing materials may change the high-frequency behavior of the components.
  - Many coating materials have a negative effect (chemically and mechanically) on the winding wires, insulation materials and connecting points. Customers are always obliged to determine whether and to what extent their coating materials influence the component. Customers are responsible and bear all risk for the use of the coating material. TDK Electronics does not assume any liability for failures of our components that are caused by the coating material.

- Magnetic core materials such as ferrites are sensitive to direct impact. This can cause the core material to flake or lead to breakage of the magnetic core material.

- Any type of tension or pressure on the product may result in damage and affect its functionality and reliability.
  - The products are only to be attached to fixings or mounting holes provided for this purpose in accordance with the data sheet.
  - If additional mechanical forces are applied to the component, e.g., application of gap pads, it is necessary to check whether they attack or destroy any part of the component.
  - It is not permitted for the product specified in the data sheet to assume a mechanical function in the final application.
- Inductance value can drop if external metallic or magnetic parts will be put close to the coil or into the air gap of the coil or core or magnetic material.

- Due to product design and applied manufacturing process, appearance, symmetry, and shape of not dimensioned details could vary within same lot, as well discoloration of housing is possible.TDK does not expect detrimental effects on product function or reliability. In case of conflicts,TDK reference standard shall prevail.
- Even for customer-specific products, conclusive validation of the component in the circuit can only be carried out by the customer.

Display of ordering codes for TDK Electronics products

The ordering code for one and the same product can be represented differently in data sheets, data books, other publications, on the company website, or in order-related documents such as shipping notes, order confirmations and product labels. **The varying representations of the ordering codes are due to different processes employed and do not affect the specifications of the respective products.** Detailed information can be found on the Internet under www.tdk-electronics.tdk.com/orderingcodes.

Important notes

The following applies to all products named in this publication:

1. Some parts of this publication contain **statements about the suitability of our products for certain areas of application**. These statements are based on our knowledge of typical requirements that are often placed on our products in the areas of application concerned. We nevertheless expressly point out **that such statements cannot be regarded as binding statements about the suitability of our products for a particular customer application**. As a rule we are either unfamiliar with individual customer applications or less familiar with them than the customers themselves. For these reasons, it is always ultimately incumbent on the customer to check and decide whether a product with the properties described in the product specification is suitable for use in a particular customer application.

2. We also point out that **in individual cases, a malfunction of electronic components or failure before the end of their usual service life cannot be completely ruled out in the current state of the art, even if they are operated as specified**. In customer applications requiring a very high level of operational safety and especially in customer applications in which the malfunction or failure of an electronic component could endanger human life or health (e.g. in accident prevention or life-saving systems), it must therefore be ensured by means of suitable design of the customer application or other action taken by the customer (e.g. installation of protective circuitry or redundancy) that no injury or damage is sustained by third parties in the event of malfunction or failure of an electronic component.

3. **The warnings, cautions and product-specific notes must be observed**.

4. In order to satisfy certain technical requirements, **some of the products described in this publication may contain substances subject to restrictions in certain jurisdictions (e.g. because they are classed as hazardous)**. Useful information on this will be found in our Material Data Sheets on the Internet (www.tdk-electronics.tdk.com/material). Should you have any more detailed questions, please contact our sales offices.

5. We constantly strive to improve our products. Consequently, **the products described in this publication may change from time to time**. The same is true of the corresponding product specifications. Please check therefore to what extent product descriptions and specifications contained in this publication are still applicable before or when you place an order.
   We also **reserve the right to discontinue production and delivery of products**. Consequently, we cannot guarantee that all products named in this publication will always be available. The aforementioned does not apply in the case of individual agreements deviating from the foregoing for customer-specific products.

6. Unless otherwise agreed in individual contracts, **all orders are subject to our General Terms and Conditions of Supply**.

Important notes

7. **Our manufacturing sites serving the automotive business apply the IATF 16949 standard**. The IATF certifications confirm our compliance with requirements regarding the quality management system in the automotive industry. Referring to customer requirements and customer specific requirements (“CSR”) TDK always has and will continue to have the policy of respecting individual agreements. Even if IATF 16949 may appear to support the acceptance of unilateral requirements, we hereby like to emphasize that **only requirements mutually agreed upon can and will be implemented in our Quality Management System**. For clarification purposes we like to point out that obligations from IATF 16949 shall only become legally binding if individually agreed upon.
8. The trade names EPCOS, CarXield, CeraCharge, CeraDiode, CeraLink, CeraPad, CeraPlas, CSMP, CTVS, DeltaCap, DigiSiMic, FilterCap, FormFit, InsuGate, LeaXield, MediPlas, MiniBlue, MiniCell, MKD, MKK, ModCap, MotorCap, PCC, PhaseCap, PhaseCube, PhaseMod, PhiCap, PiezoBrush, PlasmaBrush, PowerHap, PQSine, PQvar, SIFERRIT, SIFI, SIKOREL, SilverCap, SIMDAD, SiMic, SIMID, SineFormer, SIOV, SurfIND, ThermoFuse, WindCap, XieldCap are **trademarks registered or pending** in Europe and in other countries. Further information will be found on the Internet at www.tdk-electronics.tdk.com/trademarks.

Release 2024-02