amp inc
Memory and Storage Solutions for today's world
Accelerated Memory Production, Inc.

AMP M.2 2280, SATA SSD, SATAprime MLC, Industrial Temp.

1. Overview

AMP Inc.'s SATAprime series M.2 M.2 SSD delivers leading performance and Quality of Service combined with world-class reliability and endurance for Serial Advanced Technology Attachment (SATA)-based computers in capacities: 250GB.

AMP Inc.'s SATAprime series M.2 SSD uses a single-chip controller with a SATA interface on the system side and 8-channels of NAND Flash internally. Packaged in an industry standard M.2 form factor, the AMP Inc.'s M.2 SSD integrates easily in existing storage infrastructures. The M.2 Type 2280 is caseless form factor ideally suited for ultrathin, mobile computing applications, which require mass storage in a very small footprint.

By combining flash controller technology with SATA 6Gb/s interface support, AMP Inc.'s SATAprime series delivers sequential read/ write speeds of up to 520 MB/s.

AMP Inc.'s SATAprime series is the highest performing client drive specifically designed for the PC enthusiast and workstation systems with demanding storage workstation requirements.

2. Features

- **Form Factor:** M.2 Type 2280-D5-BM:
- **Capacity :** 250GB
- **Compliance**
  - SATA Revision 3.0; compatible with SATA 6Gb/s, 3Gb/s and 1.5Gb/s interface rates
  - ATA8-ACS2; includes SCT (Smart Command Transport) and device statistics log support
  - Enhanced SMART ATA feature set
  - Native Command Queuing (NCQ) com
- **Security**
  - Host Key Encryption support
  - FIPS-197 certified hardware-based AES-256 encryption engine (Cert# AES 3962)
  - ATA security feature command set and password login support
  - Secure erase (data page) command set: fast and military secure erase protocol
  - Sanitize device feature set support
  - Hardware Secure erase pad
- **ATA modes supported**
  - PIO mode 3, 4
  - Multiword DMA mode 0, 1, 2
  - Ultra DMA mode 0, 1, 2, 3, 4, 5
- **Hot-plug/hot-remove capable**
- **Industry-standard, 512-byte sector size support**
- **Performance** [1, 2]
  - Sequential 128KB Read: Up to 520 MB/s
  - Sequential 128KB Write: Up to 480 MB/s
  - Random 4KB Read: Up to 60,000 IOPS
  - Random 4KB Write: Up to 40,000 IOPS
  - Read/Write Latency: 65µs/40µs (TYP)
- **Power**
  - Idle : 918mW (Avg.)
  - Active Maximum : 1,906mW
- **Warranty**[4]**:** 5 year
- **Secure firmware update with digitally signed firmware image**
- **Power loss protection**
  - Industrial-grade POSCAPs included to sustain several program cycle times.
  - Level2 sudden power off recovery which minimize data loss even at sudden power off from the host during operation.
  - Hot-plug/hot-remove
- **Temperature** [4]
  - Operating : -40°C to +85°C
  - Non-Operating: -55°C to 95°C
  - Temperature monitoring and logging
  - Adaptive Thermal Protection
- **Altitude**
  - Support SRAM/DRAM ECC to mitigate SEU
  - Operating: -1,000 to 100,000 ft.
  - Non-Operating: -1,000 to 100,000 ft
- **Mechanical**
  - M.2 Type 2280-D5-BM: 22mm x 80mm
  - Z-Height 1.5mm x 1.5mm
  - Weight: 100gram (MAX)
- **Reliability**
  - Uncorrectable bit error rate (UBER): <1 sector per 10^{17} bits read
  - MTBF: 2.0 million hours[3]
  - End-to-End data protection
- **Endurance Rating**[4]
  - 250GB : 60 ~ 480 TBW
- **Product Ecological Compliance**
  - RoHS
  - CE
  - FCC

Notes:

1. Typical I/O performance numbers as measured fresh-out-of-the-box (FOB) using Iometer with a queue depth of 32 and write cache enabled.
2. 4KB transfers used for READ/WRITE latency values.
3. The product achieves a mean time between failure (MTBF) based on population statistics not relevant to individual units.
4. Specified endurance is based on from the estimation of the worst case scenario random 4K sustained write and the best case scenario of sequential 128K write case. Accurate value of remaining endurance at real workload can be monitored by SMART data D1h..
5. Operating temperature is the drive case temperature as measured by the SMART temperature attribute.

Figure 1. Functional Block Diagram

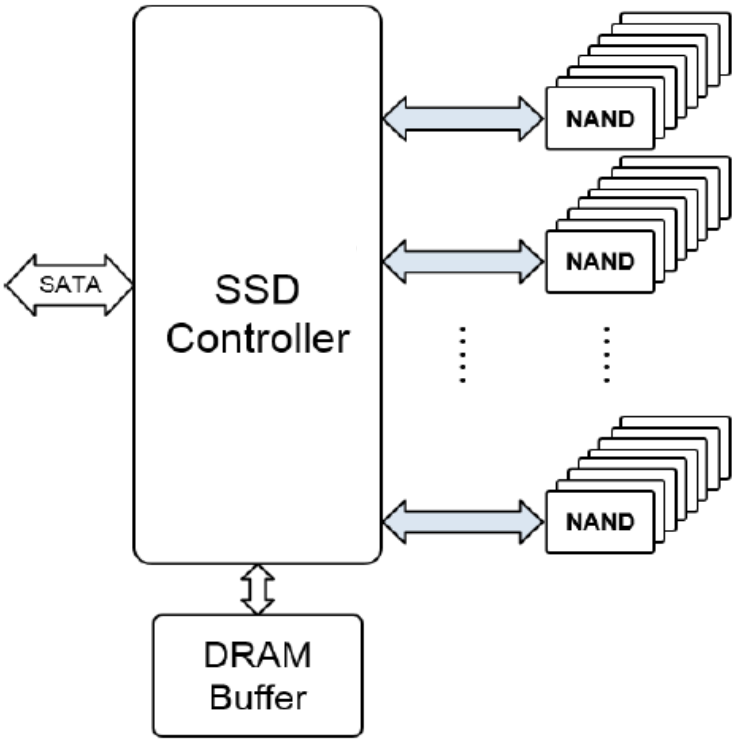

Table 1 Part Number

Part Nunber	Capacity
AMPW5T250-IM02AI	250GB

3. Mechanical Information

Figure 2 shows the physical information for the AMP Inc.'s SATAprime series in the M.2 form factors. All dimensions are in millimeters.

Figure 2. Physical Dimensions

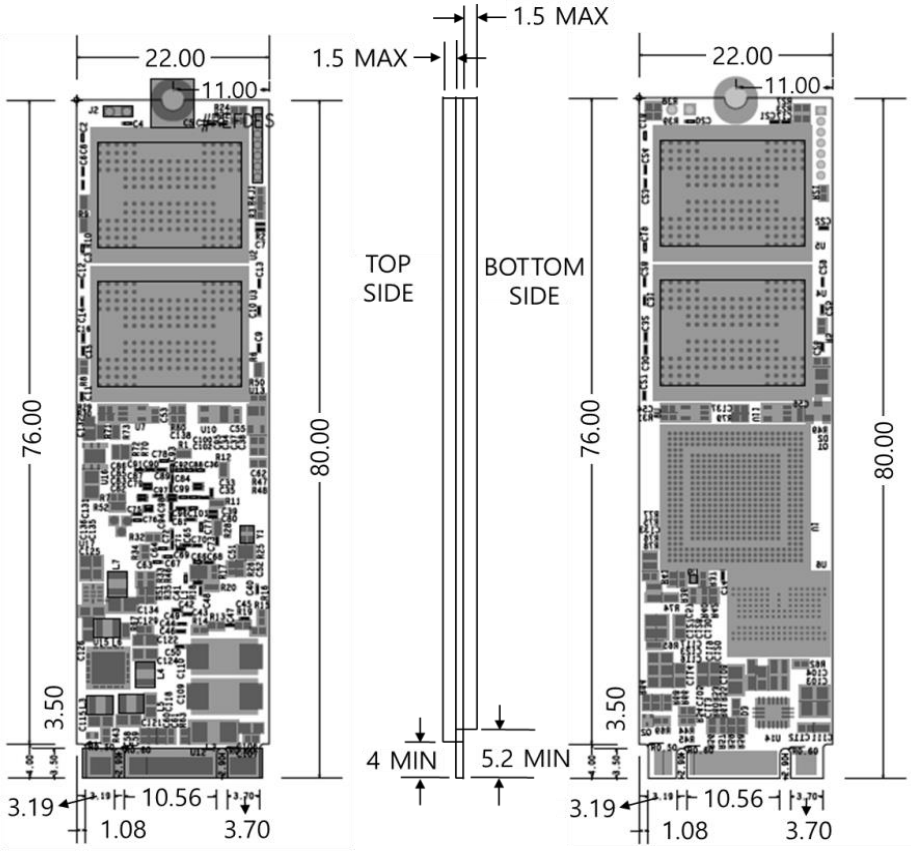

Table 2. Physical Configuration

Specification	Value	Nom Max	Unit
Height	-	3.8	mm
Width	22.0	-	mm
Length	80.0	-	mm
Weight	-	100	g

4. Connector Pin Signal Definitions

Figure 3. SSD Interface Connections

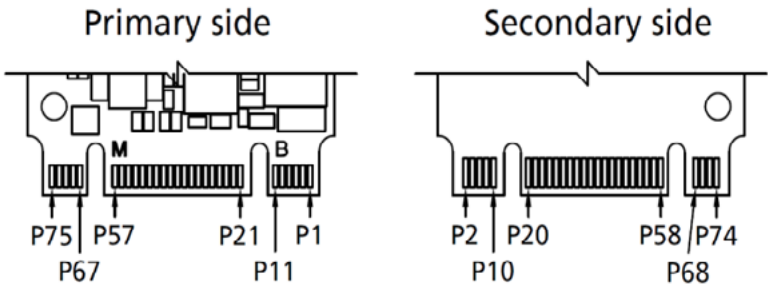

Table 3. SATA Connector Signal Pin Descriptions

Pin #	Name	Function	Pin #	Name	Function
1	GND	Ground	2	3V3	+3.3V
3	GND	Ground	4	3V3	+3.3V
5	NC	No Connect	6	NC	No Connect
7	NC	No Connect	8	NC	No Connect
9	NC	No Connect	10	DAS/DSS#(I/O)	Drive Activity
11	NC	No Connect	Module Key B		
Module Key B			20	NC	No Connect
21	GND	Ground	No	NC	No Connect
23	NC	No Connect	No	NC	No Connect
25	NC	No Connect	No	NC	No Connect
27	GND	Ground	No	NC	No Connect
29	NC	No Connect	No	NC	No Connect
31	NC	No Connect	No	NC	No Connect
33	GND	Ground	No	NC	No Connect
35	NC	No Connect	No	NC	No Connect
37	NC	No Connect	38	DEVSLP	Device Sleep
39	GND	Ground	40	NC	No Connect
41	SATA-B+	SATA B Differential Pair	42	NC	No Connect
43	SATA-B-		44	NC	No Connect
45	GND	Ground	46	NC	No Connect
47	SATA-A-	SATA A Differential Pair	48	NC	No Connect
49	SATA-A+		50	NC	No Connect
51	GND	Ground	52	NC	No Connect
53	NC	No Connect	54	NC	No Connect
55	NC	No Connect	56	Reserved	Reserved
57	GND	Ground	58	Reserved	Reserved
Module Key M			Module Key M		
67	NC	No Connect	68	NC	No Connect
69	GND	Ground	70	3V3	+3.3V
71	GND	Ground	72	3V3	+3.3V
73	GND	Ground	74	3V3	+3.3V
75	GND	Ground			

Figure 4. Hardware Trigger by pad control

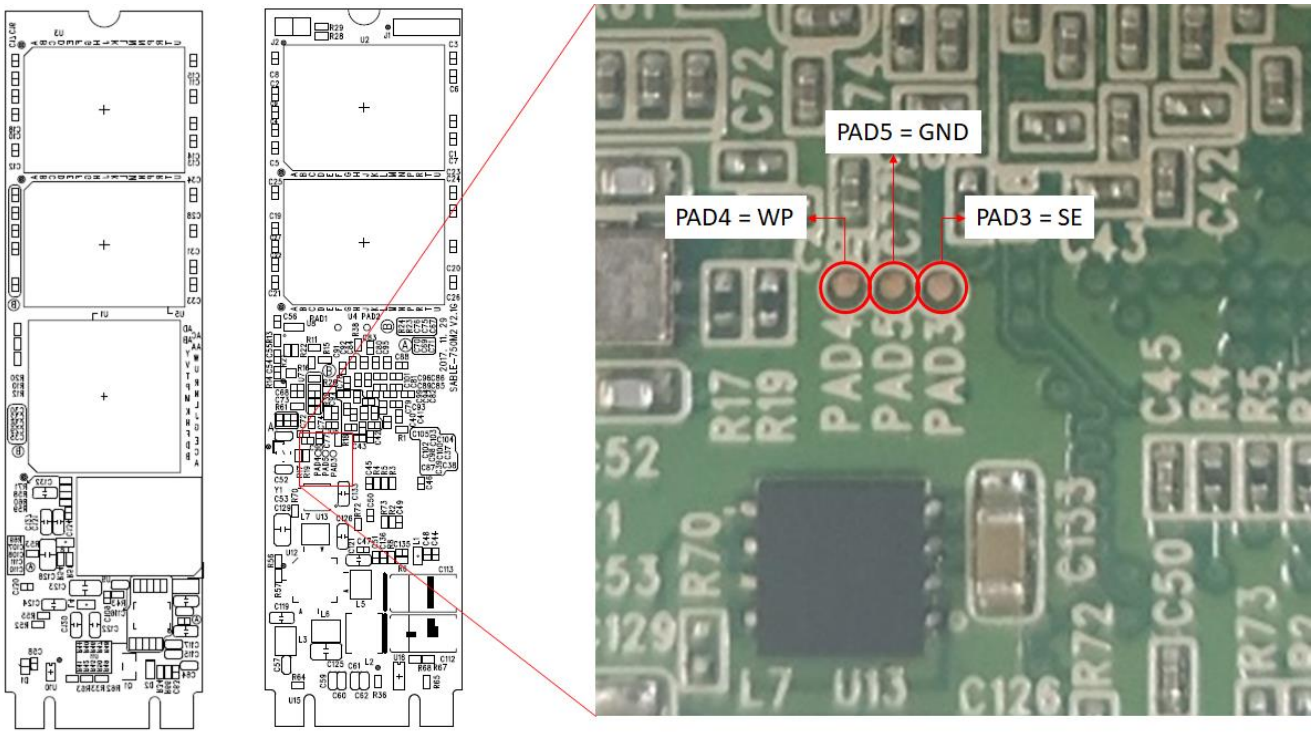

Table 4. GPIO Trigger Descriptions

Pad	Type	Description
PAD4	WP	Hardware Function Trigger1 Write protected mode at PAD4 and PAD5 shorted.
PAD5	GND	Ground
PAD3	SE	Hardware Function Trigger2 Predetermined secure erase protocol is triggered at PAD5 and PAD3 shorted. Available Military Secure Erase Protocol Crypto Erase Military Fast Erase (Default) DoD 5220 22-M NISPOM DoD 5220 22-M NISPOM, Sup 1 RCC-TG IRIG 106-07 NSA/CSS 130-2 NISPOMSUP Chap 8, Sect. 8-501 Army AR 380-19 Navy NAVSO P-5239-26 Air Force AFSSI 5020 NSA/CSS 9-12 Gutmann method

5. Electrical Characteristics

Environmental conditions beyond those listed may cause permanent damage to the device. This is a stress rating only, and functional operation of the device at these or any other conditions above those indicated in the operational sections of this specification is not implied. Exposure to absolute maximum rating conditions for extended periods may affect reliability.

Table 5. Operating Conditions

Parameter/Condition	Symbol	Min.	Max.	Unit
Voltage Input	V_{33}	4.5	5.5	V
Operating Temperature	T_C	-40	85	°C
Non-operating Temperature		-55	95	°C
Rate of Temperature Change		-	20	°C/Hr
Relative Humidity (Non-condensing)		5	95	%
Operating & Non-operating Shock		-	1000G / 0.5ms	
Operating & Non-operating Vibration		-	16.3 G_{RMS} (10~2,000Hz)	

NOTES:

1. Operating temperature is best measured by reading the SSD's on-board temperature sensor, which is recorded in SMART attribute 190 (0xBE) and 194 (0xC2).
2. Power-off sequence: When the SSD is shut down, the ATA STANDBY IMMEDIATE (STBI) command should be the last command sent by the host and acknowledged by the SSD. Failure to follow this process might result in a longer than normal time-to-ready (TTR) during the subsequent power-on sequence. TTR is the time from power-on to drive ready to accept SATA commands.
3. Shock specifications assume the SSD is mounted securely with the input vibration applied to the drive-mounting screws. Stimulus may be applied in the X, Y or Z axis. Shock specification is measured using Root Mean Squared (RMS) value.
4. Vibration specifications assume the SSD is mounted securely with the input vibration applied to the drive-mounting screws. Stimulus may be applied in the X, Y or Z axis. Vibration specification is measured using RMS value.

Table 6. Power Consumption (T.B.D.)

Capacity	Idle Average	Active Maximum (128KB Sequential Write)	Unit
250GB	918	2,853	mW

NOTES:

1. Temperature is best measured with a thermocouple attached to the center point of the exterior of the case on the cast side (side where the SATA connector is visible). Contact with the drive label is acceptable. Temperature at the PCB level is recorded in SMART attribute 194 (or 0xC2), and may differ from case temperature.

6. Product Specifications

6.1 Capacity

AMP Inc.'s SATAprime series is set to report the number of logical block addresses (LBA) that will ensure sufficient storage space for the specified capacity. Standard LBA settings, based on the IDEMA standard (LBA1-02), are shown below.

Table 7. Drive Capacity

Capacity	Total LBA		User Available Bytes (Unformatted)
	Decimal	Hexa	
250GB	488,872,832	1D145940	249,790,889,984

NOTES:

1. 1GB = 1,000,000,000 Bytes, 1TB = 1,000,000,000,000 Bytes; 1 sector = 512 Bytes.
2. LBA count shown represents total user storage capacity and will remain the same throughout the life of the drive.
3. The total usable capacity of the SSD may be less than the total physical capacity because a small portion of the capacity is used for NAND flash management and maintenance purposes.

6.2 Performance

Measured performance can vary for a number of reasons. The major factors affecting drive performance are the capacity of the drive and the interface of the host. Additionally, overall system performance can affect the measured drive performance. When comparing drives, it is recommended that all system variables are the same, and only the drive being tested varies. Performance numbers will vary depending on the host system configuration.

Table 8. Drive Performance

Specification[1]	250GB	Unit
Sequential Read (128KB)	520	MB/s
Sequential Write (128KB)	450	MB/s
Random Read (4KB)2	50,000	IOPS
Random Write (4KB)2	40,000	IOPS
Read Latency (TYP)	65	µs
Write Latency (TYP)	40	µs
Power On To Ready[3]	5	s

NOTES:

1. Performance measured using Iometer* with Queue Depth 32 and write cache enabled. Measurements are performed on a 20GB span of Logical Block Address (LBA).
2. 4KB transfers are used to measure READ/WRITE latency values with write cache enabled.
3. Power On To Ready time assumes proper shutdown. Time varies if shutdown is not preceded by STANDBY IMMEDIATE command.

6.3 Reliability

AMP Inc.'s SATAprime series meets or exceeds SSD endurance and data retention requirements as specified in the JESD218 standard. AMP Inc.'s SATAprime series incorporates advanced technology for defect and error management. They use various combinations of hardware-based error correction algorithms and firmware-based static and dynamic wear-leveling algorithms. Over the life of the SSD, uncorrectable errors may occur. An uncorrectable error is defined as data that is reported as successfully programmed to the SSD but when it is read out of the SSD, the data differs from what was programmed. Reliability specifications are listed in Table 9.

Table 9. Reliability Specifications

Parameters	Value
Uncorrectable Bit Error Rate (UBER)[1]	< 1 sector per 10^{17} bits read
Mean Time Between Failures (MTBF)[2]	2,000,000 hours
Power On/Off Cycles[3]	24 per day
Insertion Cycles[4]	N/A
Data Retention[5]	12 months power-off retention once SSD reaches rated write endurance at 30 °C
Endurance Rating (TBW)[6]	250GB : 60 ~ 480TBW
Warranty	5 years or maximum endurance used

NOTES:

1. Uncorrectable bit error rate will not exceed one sector in the specified number of bits read. In the unlikely event of a non-recoverable read error, the SSD will report it as a read failure to the host; the sector in error is considered corrupt and is not returned to the host.
2. Mean Time Between Failures is estimated based on JEDEC-218/219 standard methodology.
3. Power On/Off Cycles is defined as power being removed from the SSD, and then restored. Most host systems remove power from the SSD when entering suspend and hibernate as well as on a system shutdown.
4. The M.2 Standard does not support Hot plug operations and therefore does not specify Insertion Cycles.
5. The time period for retaining data in the NAND flash memory at maximum rated endurance.
6. Specified endurance is based on from the estimation of the worst case scenario random 4K sustained write and the best case scenario of sequential 128K write case. Accurate value of remaining endurance at real workload can be monitored by SMART data D1h..

6.4 Temperature Sensor

AMP Inc.'s SATAprime series has an internal temperature sensor with an accuracy of +/-2°C over a range of -40°C to +125°C which can be monitored using a SMART attribute BEh.

6.5 Hot Plug Support

Hot plug is supported.

6.6 Supported Command Sets

Table 10. Supported Command Sets

Command Name	Command Code (Hex)
CHECK POWER MODE	E5h or 98h
DEVICE RESET	08h
DEVICE CONFIGURATION	
DEVICE CONFIGURATION FREEZE LOCK	B1h/C1h
DEVICE CONFIGURATION IDENTIFY	B1h/C2h
DEVICE CONFIGURATION RESTORE	B1h/C0h
DEVICE CONFIGURATION SET	B1h/C3h
DOWNLOAD MICROCODE	92h
DATA SET MANAGEMENT	06h
EXECUTE DEVICE DIAGNOSTIC	90h
FLUSH CACHE	E7h
FLUSH CACHE EXT	EAh
IDENTIFY DEVICE	ECh
IDLE	E3h or 97h
IDLE IMMEDIATE	E1h or 95h
INITIALIZE DEVICE PARAMETERS	91h
READ BUFFER	E4h
READ DMA	C8h
READ DMA EXT	25h
READ FPDMA QUEUED	60h
READ LOG EXT	2Fh
READ MULTIPLE	C4h
READ MULTIPLE EXT	29h
READ NATIVE MAX ADDRESS	F8h
READ NATIVE MAX ADDRESS EXT	27h
READ SECTOR(S)	20h
READ SECTOR(S) EXT	24h
READ VERIFY SECTOR(S)	40h
READ VERIFY SECTOR(S) EXT	42h
SECURITY DISABLE PASSWORD	F6h
SECURITY ERASE PREPARE	F3h
SECURITY ERASE UNIT	F4h
SECURITY FREEZE LOCK	F5h
SECURITY SET PASSWORD	F1h
SECURITY UNLOCK	F2h
SEEK	70h
SET FEATURES	
Enable write cache	EFh/02h
Disable write cache	EFh/82h
Set transfer mode	EFh/03h
Enable Power-Up In Standby	Efh/06h
Disable Power-Up In Standby	Efh/86h
Enable DMA Setup FIS Auto-Activate optimization	Efh/10h/02h

Disable DMA Setup FIS Auto-Activate optimization	Efh/90h/02h
Enable Device-initiated interface power state transitions	Efh/10h/03h
Disable Device-initiated interface power state transitions	Efh/90h/03h
SET MAX	
SET MAX ADDRESS	F9h/na
SET MAX FREEZE LOCK	F9h/04h
SET MAX LOCK	F9h/02h
SET MAX SET PASSWORD	F9h/01h
SET MAX UNLOCK	F9h/03h
SET MAX ADDRESS EXT	37h
SET MULTIPLE MODE	C6h
SLEEP	E6h or 99h
SMART	
SMART DISABLE OPERATIONS	B0h/D9h
SMART ENABLE OPERATIONS	B0h/D8h
SMART ENABLE/DISABLE ATTRIBUTE AUTOSAVE	B0h/D2h
SMART EXECUTE OFF-LINE IMMIDIATE	B0h/D4h
SMART READ ATTRIBUTE THRESHOLDS	B0h/D1h
SMART READ DATA	B0h/D0h
SMART READ LOG	B0h/D5h
SMART RETURN STATUS	B0h/DAh
SMART SAVE ATTRIBUTE VALUES	B0h/D3h
SMART WRITE LOG	B0h/D6h
STANDBY	E2h or 96h
STANDBY IMMEDIATE	E0h or 94h
SOFT RESET	FFh
WRITE BUFFER	E8h
WRITE DMA	CAh
WRITE DMA EXT	35h
WRITE FPDMA QUEUED	61h
WRITE LOG EXT	3Fh
WRITE MULTIPLE	C5h
WRITE MULTIPLE EXT	39h
WRITE SECTOR(S)	30h
WRITE SECTOR(S) EXT	34h

6.7 SMART

6.7.1 SMART Subcommand sets

In order to select a subcommand the host must write the subcommand code to the device's Features Register before issuing the SMART Function Set command. The subcommands are listed below.

Table 11. SMART Subcommand Sets

Command	Command Code (Hex)
SMART READ DATA	D0h
SMART ENABLE/DISABLE ATTRIBUTE AUTOSAVE	D2h
SMART EXECUTE OFF-LINE IMMIDIATE	D4h
SMART READ LOG	D5h
SMART WRITE LOG	D6h
SMART ENABLE OPERATIONS	D8h
SMART DISABLE OPERATIONS	D9h
SMART RETURN STATUS	DAh

6.7.2 SMART Read Data (subcommand D0h)

This subcommand returns the device's Attribute Values to the host. The Attribute Values consist of 512bytes.

Table 12. Device Attribute Data Structure

Byte	Description
0~1	Data structure revision number (Vendor Specific)
2~361	1st - 30th Individual attribute data (Vendor Specific)
362	Off-line data collection status
363	Self-test execution status
364~365	Total time in seconds to complete off-line data collection activity
366	Vendor Specific
367	Off-line data collection capability
368-369	SMART capability
370	Error logging capability
	7-1 Reserved
	0 1=Device error logging supported
371	Self-test failure check point (Vendor Specific)
372	Short self-test routine recommended polling time(in minutes)
373	Extended self-test routine recommended polling time(in minutes)
374-510	Reserved
511	Data structure checksum

Table 13. Individual Attribute Data Structure

Byte	Description
0	Attribute ID Number
1~2	Flags
3	Current Value
4	Worst Value
5~10	Attribute Value (FFFF FFFF FFFFh)
11	Reserved

Table 14. Attribute ID Numbers

ID(DEC)	ID(HEX)	Attribute Name	Description
1	01h	Vendor-specific	
9	09h	Power-On Hours	The time amount of power-on state (unit: hours)
12	0Ch	Power Cycle Count	Counts of full power on/off cycles
13	0Dh	Vendor-specific	
181	AFh	Program Failure Block Count	Counts the number of flash program failures 00~23 : flash program failure count / 24~47 : flash erase failure count
184	B8h	Initial Bad Block Count	The number of bad blocks which was detected when firmware was installed
187	BBh	Read Failure Block Count (Uncorrectable)	Uncorrectable read failure block count 00~23 : read bad block count / 24~47 : potential read bad block count
190	BEh	Temperature	Current device temperature (unit: °C)
199	C7h	SATA Error CRC Count	The number of encountered SATA interface errors 00~23 : CRC Error count / 24~47 : Handshake Error Count
200	C8h	Total count of write commands	The total number of written command during the entire lifetime of the device
201	C9h	Total count of read commands	The total number of read command during the entire lifetime of the device
202	CAh	Vendor-specific	
204	CCh	Vendor-specific	
209	D1h	SSD Life Left (Remaining Drive Life)	Indicates the approximate SSD life left [(maximum PE cycle – average erase count) / maximum PE cycle]
210	D2h	Erase Count	Indicates the minimum, average, maximum erased counts of all the blocks 00~15 : The minimum erased count 16~31 : The average erased count 32~47 : The maximum erased count
213	D5h	Maximum PE Cycle Count	Returns maximum PE cycle counts of flash
225	E1h	Vendor-specific	
226	E2h	Flush command count	Flush command count 00~23 : self flush count / 24~47 : host flush count
227	E3h	Vendor-specific	
228	E4h	Vendor-specific	
229	E5h	Vendor-specific	
230	E6h	Total Free Block	The current total free blocks count
241	F1h	Vendor-specific	
243	F2h	Host Flush Count	Host Flush Count
244	F3h	Self Flush count	Self Flush Count
245	F4h	Index Life Left	Indicates the approximate index block endurance left

6.7.3 SMART Execute Off-line Immediately (subcommand D4h)

This subcommand causes the device to start the off-line process for the requested mode and operation.
The LBA Low register shall be set to specify the operation to be executed.

Table 15. SMART Execute Off-line Immediately

LBA Low	Description
00h	Execute SMART off-line data collection routine immediately
01h	Execute SMART Short self-test routine immediately in off-line mode
02h	Execute SMART Extended self-test routine immediately in off-line mode
03h	Reserved
04h	Execute SMART Selective self-test routine immediately in off-line mode
40h	Reserved
7Fh	Abort off-line mode self-test routine
81h	Execute SMART short self-test routine immediately in captive mode
82h	Execute SMART Extended self-test routine immediately in captive mode
84h	Execute SMART selective self-test routine immediately in captive mode
C0h	Reserved

Off-line mode: The device executes command completion before executing the specified routine. During execution of the routine the device will not set BSY nor clear DRDY. If the device is in the process of performing its routine and is interrupted by a new command from the host, the device will abort or suspend its routine and service the host within two seconds after receipt of the new command. After servicing the interrupting command, the device will resume its routine automatically or not start its routine depending on the interrupting command.

Captive mode: When executing self-test in captive mode, the device sets BSY to one and executes the specified self-test routine after receipt of the command. At the end of the routine, the device sets the execution result in the Self-test execution status byte (see Table 7-1: "Device Attribute Data Structure" on page 23) and ATA registers and then executes the command completion. See definitions below.

Status Set ERR to one when the self-test has failed
Error Set ABRT to one when the self-test has failed
LBA Low Set to F4h when the self-test has failed
LBA High Set to 2Ch when the self-test has failed

6.7.4 SMART Read Log Sector (subcommand D5h)

This command returns the specified log sector content to the host.
LBA Low and Sector Count Registers shall be set to specify the log sector and sector number to be written.

Table 16. SMART Read Log Sector

Log Sector Address	No. Sector	Content	
00h	1	Log directory	Read Only
01h	1	SMART error log	Read Only
02h	51	Comprehensive SMART error log	Read Only
03h	37	Extended Comprehensive SMART error log	Read Only
06h	1	SMART self-test log	Read Only
07h	1	Extended SMART self-test log	Read Only
09h	1	Selective self-test log	Read and Write
10h	1	NCQ Error log	Read only
11h	1	SATA Phy event counter log	Read only
80h-9Fh	32	Host vendor specific	Read and Write
A0h	1	Reserved	Vendor Specific

Table 17. SMART Log Directory

Byte	Description
0~1	SMART Logging Version (set to 01h)
2~3	Number of sectors in the log at log address 1
4~5	Number of sectors in the log at log address 2
…	
510~511	Number of sectors in the log at log address 255

Table 18. Self-test log structure

Byte	Description
0~1	Data structure revision
n*24+2	Self-test number
n*24+3	Self-test execution status
n*24+4~n*24+5	Life timestamp
n*24+6	Self-test failure check point
n*24+7~n*24+10	LBA of first failure
n*24+11~n*24+25	Vendor specific
…..	…..
506~507	Vendor specific
508	Self-test log pointer
509~510	Reserved
511	Data structure checksum

N is 0 through 20
The data structure contains the descriptor of the Self-test that the device has performed. Each descriptor is 24 bytes long and the self-test data structure is capable to contain up to 21 descriptors. After 21 descriptors have been recorded, the oldest descriptor will be overwritten with the new descriptor. The self-test log pointer points to the most recent descriptor. When there is no descriptor, the value is 0. When there are descriptor(s), the value is 1 through 21.

Table 19. Selective self-test log structure

Byte	Content	Remarks
0-1	Data structure revision	Read and Write
2-9	Starting LBA for test span 1	Read and Write
10-17	Ending LBA for test span 1	Read and Write
18-25	Starting LBA for test span 2	Read and Write
26-33	Ending LBA for test span 2	Read and Write
34-41	Starting LBA for test span 3	Read and Write
42-49	Ending LBA for test span 3	Read and Write
50-57	Starting LBA for test span 4	Read and Write
58-65	Ending LBA for test span 4+	Read and Write
66-73	Starting LBA for test span 5	Read and Write
74-81	Ending LBA for test span 5	Read and Write
82-337	Reserved	Reserved
338-491	Vendor specific	Vendor specific
492-499	Current LBA under test	Read
00-501	Current span under test	Read
502-503	Feature flags R/W	Read and Write
504-507	Vendor Specific	Vendor specific
508-509	Selective self test pending time	Read and Write
510	Reserved	Reserved
511	Data structure checksum	Read and Write

6.7.5 SMART Write Log Sector (subcommand D6h)

This command writes 512 bytes of data to the specified log sector.
LBA Low and Sector Count registers shall be set to specify the log address and sector number to be written.

6.7.6 SMART Enable Operations (subcommand D8h)

This subcommand enables access to all SMART capabilities. Prior to receipt of a SMART Enable Operations subcommand, Attribute Values are neither monitored nor saved by the device. The state of SMART—either enabled or disabled—will be preserved by the device across power cycles. Once enabled, the receipt of subsequent SMART Enable Operations subcommands will not affect any of the Attribute Values.

6.7.7 SMART Disable Operations (subcommand D9h)

This subcommand disables all SMART capabilities. After receipt of this subcommand the device disables all SMART operations. Non self-preserved Attribute Values will no longer be monitored. The state of SMART—either enabled or disabled—is preserved by the device across power cycles. Note that this subcommand does not preclude the device's power mode attribute auto saving. After receipt of the SMART Disable Operations subcommand from the host, all other SMART subcommands except SMART Enable Operations are disabled and will be aborted by the device returning the error code as specified in "SMART Error Codes".
Any Attribute Values accumulated and saved to volatile memory prior to receipt of the SMART Disable Operations command will be preserved in the device's Attribute Data Sectors. If the device is re-enabled, these Attribute Values will be updated, as needed, upon receipt of a SMART Read Attribute Values or a SMART Save Attribute Values command.

6.7.8 SMART Return Status (subcommand DAh)

This subcommand is used to communicate the reliability status of the device to the host's request. Upon receipt of the SMART Return Status subcommand the device saves any updated Attribute Values to the reserved sector, and compares the updated Attribute Values to the Attribute Thresholds.

6.8 IDENTIFY DEVICE Command Data

Table 20. Returned Sector Data

Word	F=Fixed V=Variable X=Both	Default Value	Description
0	X	0040h	General configuration bit-significant information
1	X	3FFFh	Obsolete - Number of logical cylinders (16,383)
2	V	C837h	Specific configuration
3	X	0010h	Obsolete - Number of logical heads (16)
4-5	X	0h	Retired
6	X	003Fh	Obsolete - Number of logical sectors per logical track (63)
7-8	V	0h	Reserved for assignment by the CompactFlash* Association (CFA)
9	X	0h	Retired
10-19	F	varies	Serial number (20 ASCII characters)
20-21	X	0h	Retired
22	X	0000h	Obsolete
23-26	F	varies	Firmware revision (8 ASCII characters)
27-46	F	varies	Model number
47	F	8001h	Maximum number of sectors transferred per interrupt on multiple commands
48	F	4000h	Trusted Computing Feature Set
49	F	2F00h	Capabilities
50	F	4000h	Capabilities
51-52	X	0h	Obsolete
53	F	0007h	Words 88 and 70:64 valid

54	X	3FFFh	Obsolete - Number of logical cylinders (16,383)
55	X	0010h	Obsolete - Number of logical heads (16)
56	X	003Fh	Obsolete - Number of logical sectors per logical track (63)
57-58	X	0h	Obsolete
59	F	0101h	Number of sectors transferred per interrupt on multiple commands
60-62	V	varies	Total number of user-addressable sector
63	X	0407h	Multi-word DMA modes supported/selected
64	F	0003h	PIO modes supported
65	F	0078h	Minimum multiword DMA transfer cycle time per word
66	F	0078h	Manufacturer's recommended multiword DMA transfer cycle time
67	F	0078h	Minimum PIO transfer cycle time without flow control
68	F	0078h	Minimum PIO transfer cycle time with IORDY flow control
69	F	4020h	Additional Supported
70	F	0000h	Reserved
71-74	F	0h	Reserved for IDENTIFY PACKET DEVICE command
75	F	001Fh	Queue depth
76	F	050Eh	Serial ATA capabilities
77	F	0006h	Reserved for future Serial ATA definition
78	F	0044h	Serial ATA features supported
79	V	0044h	Serial ATA features enabled
80	F	01E0h	Major version number
81	F	0000h	Minor version number
82	F	346Bh	Command set supported
83	F	7D01h	Command sets supported
84	F	4122h	Command set/feature supported extension
85	V	3469h	Command set/feature enabled
86	V	3C01h	Command set/feature enabled
87	V	4122h	Command set/feature default
88	V	007Fh	Ultra DMA Modes
89	F	0004h	Time required for security erase unit completion
90	F	0004h	Time required for enhanced security erase completion
91	V	0000h	Current advanced power management value
92	V	FFFEh	Master Password Revision Code
93	X	0000h	Hardware reset result: the contents of bits (12:0) of this word shall change only during the execution of a hardware reset
94	V	0000h	Vendor's recommended and actual acoustic management value
95	F	0000h	Stream minimum request size
96	V	0000h	Streaming transfer time - DMA
97	V	0000h	Streaming access latency - DMA and PIO
98-99	F	0000h	Streaming performance granularity
100-103	V	Varies	Maximum user LBA for 48-bit address feature set
104	V	0000h	Streaming transfer time - PIO
105	V	0001h	Maximum number of 512-byte blocks of LBA Range Entries per DATASET MANAGEMENT command

106	F	4000h	Physical sector size / logical sector size
107	F	0000h	Inter-seek delay for ISO-7779 acoustic testing in microseconds
108-111	F	varies	Unique ID
112-115	F	0h	Reserved for world wide name extension to 128 bits
116	V	0000h	Reserved for technical report
117-118	F	0h	Words per logical sector
119	F	0000h	Supported settings
120	F	0000h	Command set/feature enabled/supported
121-126	F	0h	Reserved
127	X	0000h	Removable Media Status Notification feature set support
128	V	0001h	Security status
129	V	0000h	Vendor-specific
130-159	X	0h	Vendor-specific
160	X	0000h	CompactFlash Association (CFA) power mode 1
161-167	X	0h	Reserved for assignment by the CFA
168	X	0003h	Reserved for assignment by the CFA
169	X	0001h	Data set management Trim attribute support
170-175	F	0h	Reserved for assignment by the CFA
176-205	X	0h	Current media serial number
206	X	0000h	SCT Command Transport
207-208	F	0h	Reserved
209	X	4000h	Alignment of logical blocks within a physical block
210-211	V	0h	Write-Read-Verify Sector Count Mode 3 (DWord)
212-213	F	0h	Write-Read-Verify Sector Count Mode 2 (DWord)
214	X	0000h	NV Cache Capabilities
215-216	V	0h	NV Cache Size in Logical Blocks (DWord)
217	F	0001h	Nominal media rotation rate
218	V	0000h	Reserved
219	F	0000h	NV Cache Options
220	V	0000h	Write-Read-Verify feature set
221	X	0000h	Reserved
222	F	103Fh	Transport major version number
223	F	0000h	Transport minor version number
224-229	F	0h	Reserved
230-233	X	0h	Extended Number of User Addressable Sectors (QWord)
234	F	0000h	Minimum number of 512-byte data blocks per DOWNLOAD MICROCODE command for mode 03h
235	F	0000h	Maximum number of 512-byte data blocks per DOWNLOAD MICROCODE command for mode 03h
236-254	X	0h	Reserved
255	V	varies	Integrity word

NOTES:

F = Fixed. The content of the word is fixed and does not change. For removable media devices, these values may change when media is removed or changed.

V = Variable. The state of at least one bit in a word is variable and may change depending on the state of the device or the commands executed by the device.

X = F or V. The content of the word may be fixed or variable.