ABM10AAIG series

Automotive Grade Ceramic Base SMD 2-pad Crystal

Description

The ABM10AAIG series is an Automotive Grade AEC-Q200 qualified AT-Cut fundamental mode MHz quartz crystal offered in a 2.5mm x 2.0mm x 0.53mm two-pad SMD package. Tight frequency accuracy of ±15ppm at room temperature (+25°C) with frequency stability as low as ±50ppm over operating temperature range of -40°C to +125°C is achieved in industry-standard carrier frequencies common for Infotainment Systems, Keyless Entry and Startup, GPS and Navigation, ADAS (Advanced Driver Assistance Systems), Vehicle to Vehicle Communication, LiDAR (Light Detection and Ranging), and In-vehicle Networking end applications.

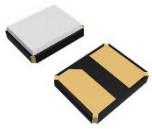

Features

- AEC-Q200 Qualified
- Automotive Grade 1: -40°C to +125°C
- TS16949 Production Line Certified
- PPAP Available Upon Request
- REACH/RoHS II Compliant | MSL Level = 1

Typical Applications

- Infotainment Systems
- Keyless Entry & Startup
- GPS & Navigation
- Comfort control
- ADAS (Advanced Driver Assistance Systems)
- Vehicle to Vehicle Communication
- LiDAR (Light Detection and Ranging)
- In-vehicle Networking
- Powertrain & Drive Control
- Power Control & Conversion
- Industrial Control & Automation

Electrical Specifications

Parameters	Min.	Typ.	Max.	Units	Notes
Frequency Range	12.000		60.000	MHz	
Operation Mode	Fundamental (AT-cut)				
Operating Temperature	-40		+125	ºC	Option “blank”; See options
Storage Temperature	-55		+125	ºC	
Frequency Tolerance @+25°C	-50		+50	ppm	Option “blank”; See options
Frequency Stability over the Operating Temperature (ref. to +25°C)	-100		+100	ppm	Option “blank”; See options
Equivalent series resistance (R1)			250	Ω	12.000 – 15.999MHz
			80		16.000 – 20.999MHz
			50		21.000 – 60.000MHz
Shunt capacitance (C0)			3.0	pF	
Load capacitance (CL)		8		pF	Option “blank”; See options
Drive Level		100	300	µW	
Aging	-3		+3	ppm	@25°C±3°C First year
Insulation Resistance	500			MΩ	@100Vdc ± 15V

Part Identification (left blank if standard)

ABM10AAIG - [ ] MHz - [ ] - [ ] - [ ] [ ] [ ] - [ ]

Frequency in MHz
Please specify the frequency in MHz.
e.g. 24.000MHz

Load Capacitance (pF)
Blank: 8pF
If not standard, please specify CL in pF or S for series

Custom ESR if other than standard
Blank = Standard
Custom = Rxx or Rxxx
Specify an xx or xxx value in Ω
(e.g.: R40 or R100)

Operating Temp.
Blank: -40°C ~ +125°C (*)
D: -40°C ~ +85°C
J: -40°C ~ +105°C (*)
(*) Only offered @ Freq. Stability options Z, Blank, and R.

Freq. Tolerance
Blank: ± 50 ppm
1: ± 30 ppm
2: ± 15 ppm

Freq. Stability
Blank: ± 100 ppm
R: ± 150 ppm
Z: ± 50 ppm
Y: ± 30 ppm

Packaging
Blank: Bulk
T3: 3k pcs / reel

Mechanical Dimensions

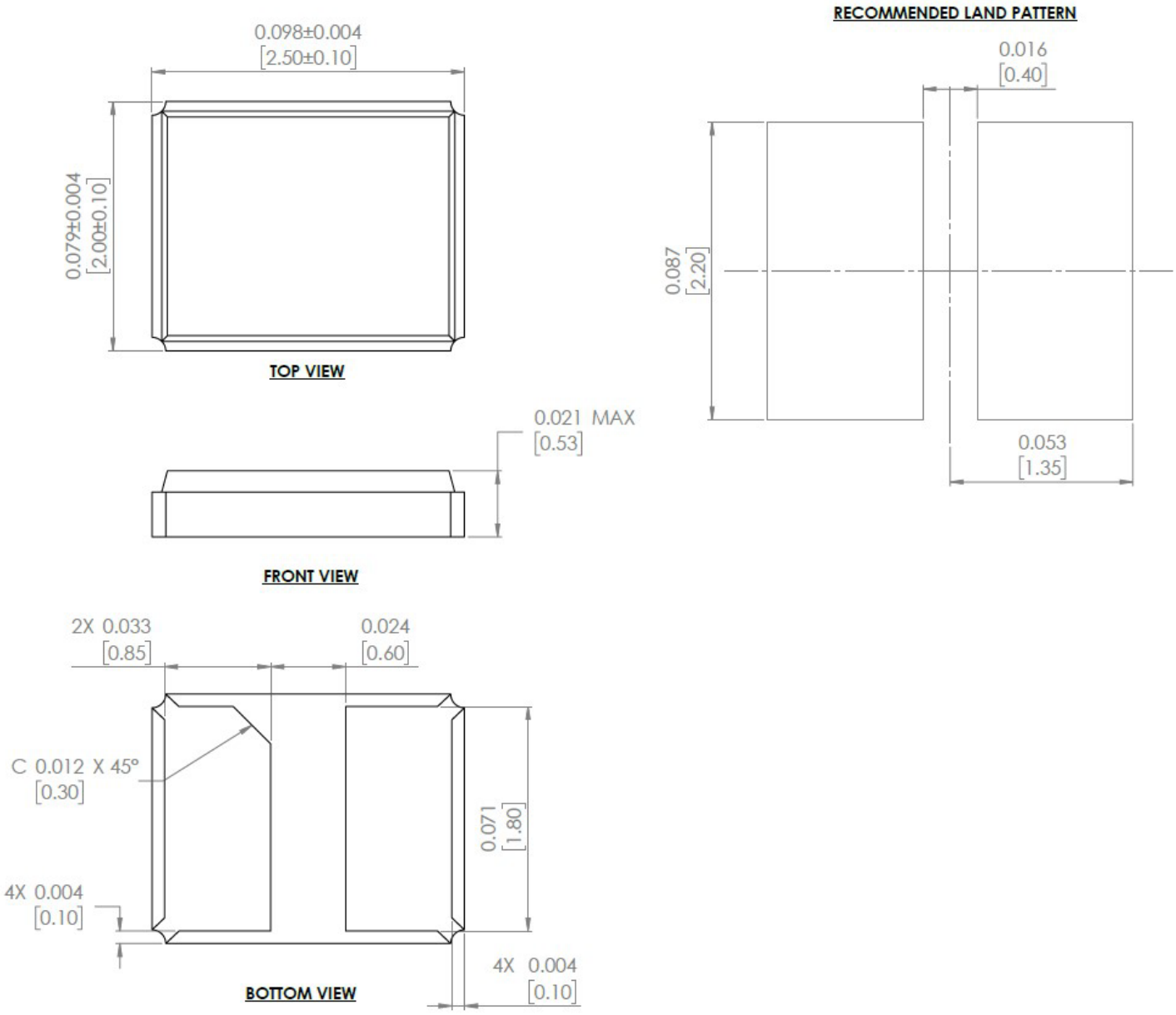

Dimensions: inches [mm]

Reflow Profile [JEDEC J-STD-020]

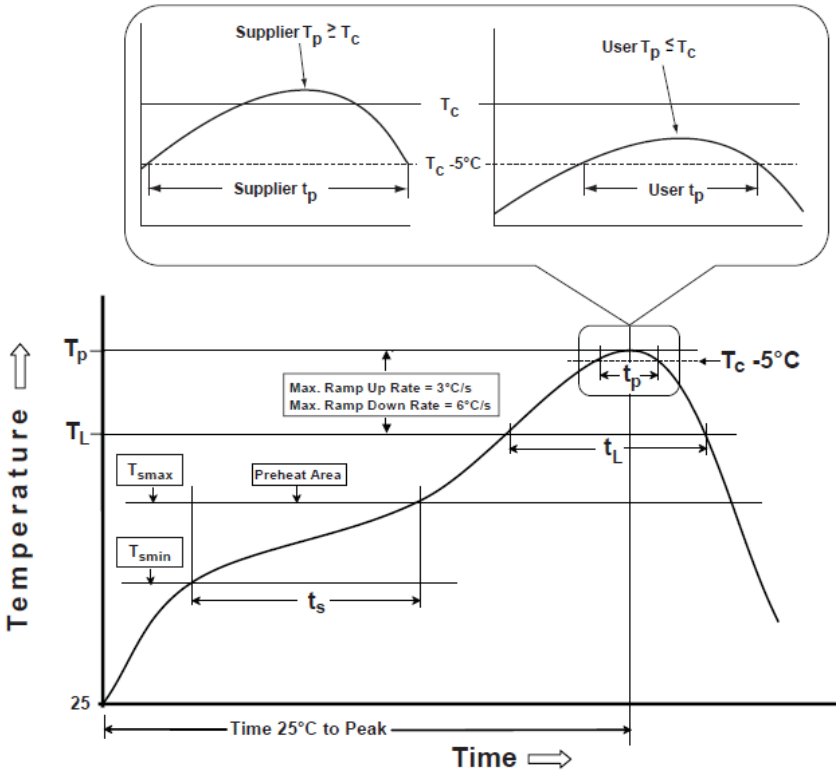

Table 1

SnPb Eutectic Process Classification Temperatures (T_c)		
Package Thickness	**Volume mm³ <350**	**Volume mm³ ≥350**
<2.5 mm	235 °C	220 °C
≥2.5 mm	220 °C	220 °C

Table 2

Pb-Free Process Classification Temperatures (T_c)			
Package Thickness	**Volume mm³ <350**	**Volume mm³ 350-2000**	**Volume mm³ >2000**
<1.6 mm	260 °C	260 °C	260 °C
1.6 mm - 2.5 mm	260 °C	250 °C	245 °C
>2.5 mm	250 °C	245 °C	245 °C

Profile Feature	Sn-Pb Eutectic Assembly	Pb-Free Assembly
Preheat / soak		
Temperature minimum (T_{smin})	100°C	150°C
Temperature maximum (T_{smax})	150°C	200°C
Time (T_{smin} to T_{smax}) (t_s)	60 - 120 sec.	60 - 120 sec.
Average ramp-up rate (T_{smax} to T_P)	3°C/sec. max	3°C/sec. max
Liquidous temperature (T_L)	183°C	217°C
Time at liquidous (t_L)	60 - 150 sec.	60 - 150 sec.
Peak package body temperature (T_P)*	**see Table 1**	**see Table 2**
Time (t_p)** within 5°C of the specified classification temperature (T_C)	20 sec.	30 sec.
Ramp-down rate (T_p to T_{smax})	6°C/sec. max	6°C/sec. max
Time 25°C to peak temperature	6 min. max	8 min. max
Reflow cycles	2 max	2 max

*Tolerance for peak profile temperature (T_P) is defined as a supplier minimum and a user maximum.

**Tolerance for time at peak profile temperature (t_p) is defined as supplier minimum and a user maximum.

Packaging

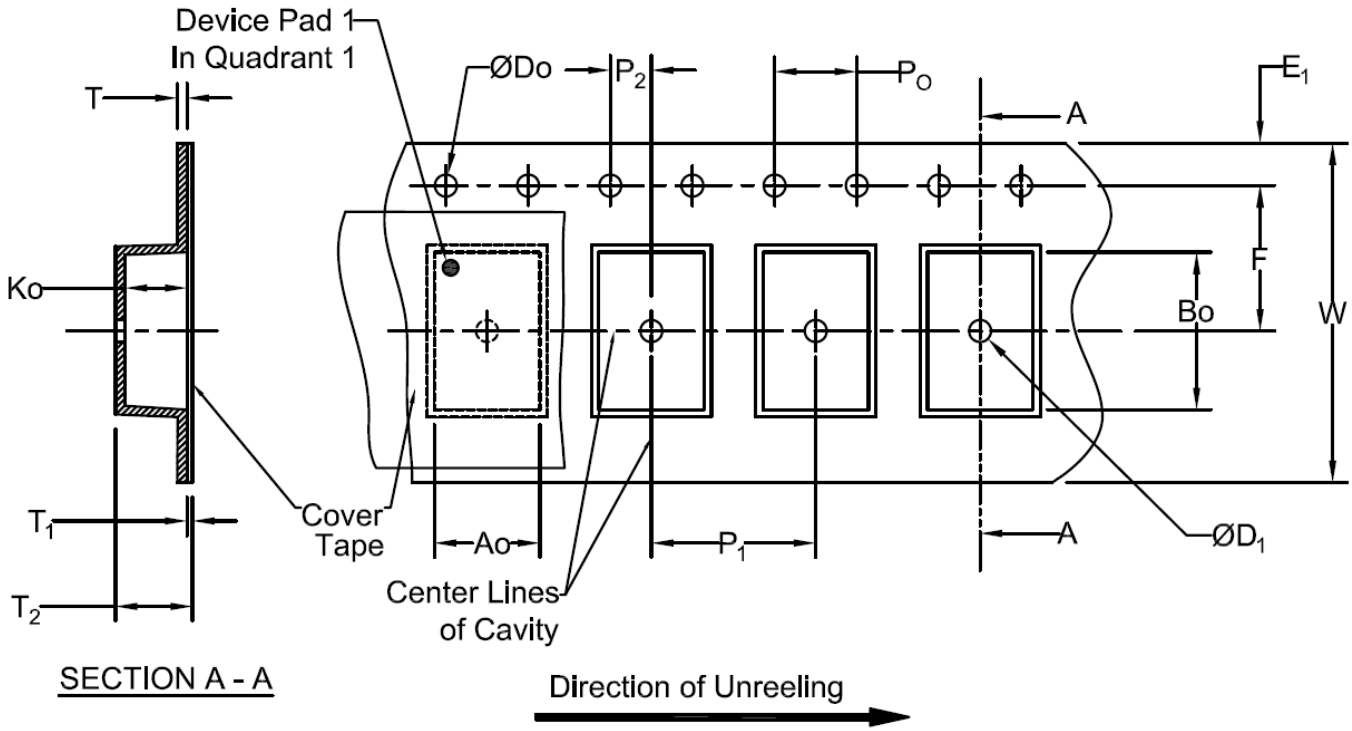

Tape Specifications (mm)							
Width	Ao	Bo	Do	D_1 (Min)	E_1	F	Ko
8mm	*	*	1.5+0.1/-0.0	1.0	1.75±0.1	3.5±0.05	*
Width	P_1	P_2	P_0	T (Max)	T_1 (Max)	T_2 (Max)	W (Max)
8mm	4.0±0.1	2.0±0.05	4.0±0.1	0.6	0.1	2.5	8.3

***Note: Compliant to EIA-481**

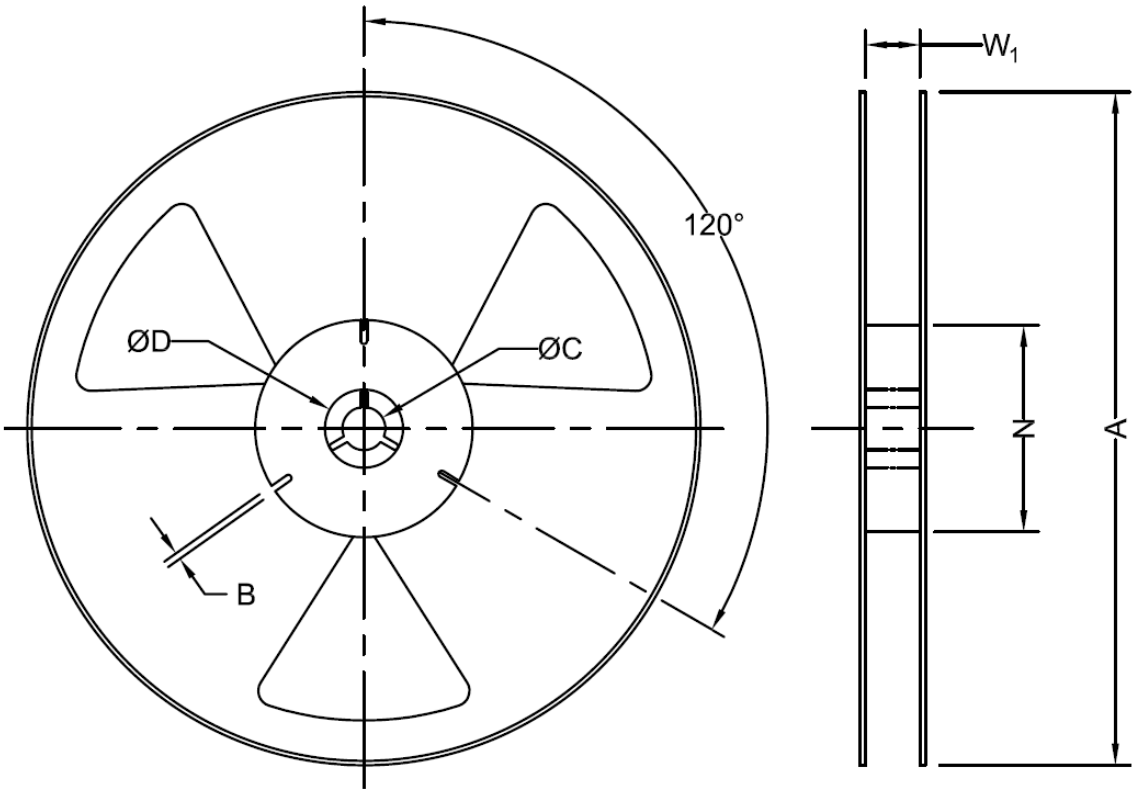

Reel Specifications (mm)							
Width	Qty/Reel	A (Nom)	B (Min)	C (Min)	D (Min)	N (Min)	*W_1
8mm	3000	178	1.5	13.0+0.5/-0.2	20.2	50	8.4+1.5/-0.0

***Note: Measured at Hub**