MICO BASIC 8.2 electronic circuit protection, 8 CHANNELS

IN: 24 V DC OUT: 24 V DC / 2 A CL2

Art.No.: 9000-41068-0200000
Weight: 0.160 kg
Country of origin: CZ
Model designation: MICO Basic 8.2

MICO BASIC 8.2
8 channels
Current adjustment 2 A

[Link to Product]

Illustration



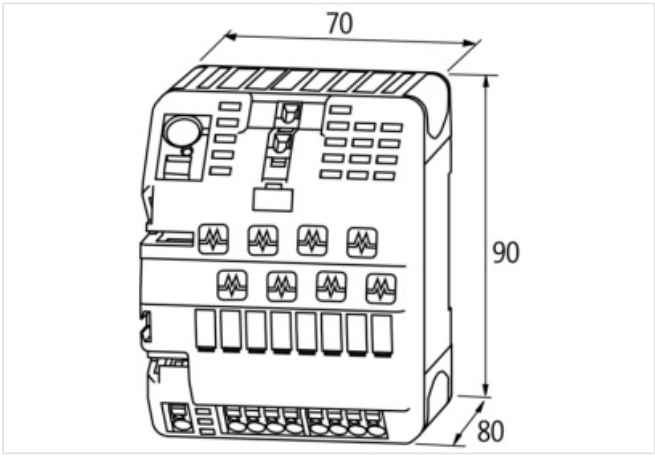

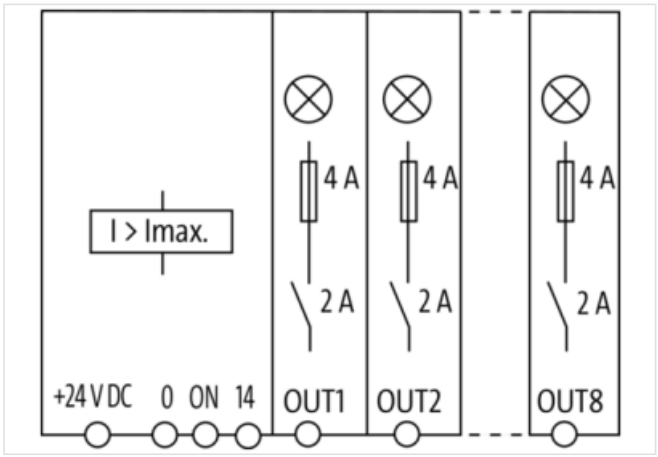

Product may differ from Image

Commercial data

URL webshop	https://shop.murrelektronik.com/9000-41068-0200000
GTIN	4048879332439
EU-Customs tariff number	85363010
US-Customs tariff number	8536308000

The information in this Product-PDF has been compiled with the utmost care.
Liability for the correctness completeness and topicality of the information is restricted to gross negligence. Version: 2026-11-24

ECLASS-6.0	27371802
ECLASS-6.1	27371802
ECLASS-7.0	27371802
ECLASS-7.1	27371802
ECLASS-8.0	27371802
ECLASS-8.1	27371802
ECLASS-9.0	27371802
ECLASS-9.1	27371802
ECLASS-10.0.1	27371802
ECLASS-10.1	27371802
ECLASS-11.0	27371802
ECLASS-11.1	27371802
ECLASS-12.0	27371802
ECLASS-13.0	27371802
ECLASS-14.0	27371802
ETIM-5.0	EC001440
ETIM-6.0	EC001440
ETIM-7.0	EC001440
ETIM-8.0	EC001440
ETIM-9.0	EC001440
ETIM-10.0	EC001440
customs tariff number	85363010
EAN	4048879332439
Packaging unit	1
Electrical data | Input	
Input voltage DC	24 V
Input voltage DC min.	18 V
Input voltage DC max.	30 V
Total current bridge set max.	40 A
ON input voltage control inputs min.	10 V
ON input voltage control inputs max.	30 V
ON pulse length control inputs high min.	20 ms
Electrical data | Output	
Switch-on capacity per channel max.	20 mF
Switching current max.	20 mA
Installation	
Connection cross-section inputs max.	16 mm²
Connection cross-section outputs max.	4 mm²
Connection cross-section control inputs / control outputs max.	2.5 mm²
Mechanical data | Mounting data	
Height	90 mm
Width	70 mm
Depth	80 mm
Mounting method	Snapped
Suitable for mounting type	Mounting rail TH35, (EN 60715)
Environmental characteristics | Climatic	
Operating temperature min.	0 °C
Operating temperature max.	55 °C
Ambient temperature (storage, transport)	-40 °C … 80 °C
Connection type 7-7	
Family construction form	Bridging contact

The information in this Product-PDF has been compiled with the utmost care.
Liability for the correctness completeness and topicality of the information is restricted to gross negligence. Version: 2026-11-24

No. of poles	1
Gender	Female
Color contact carrier	black
PIN 1	24 V DC
Family construction form	Bridging contact
No. of poles	1
Gender	Female
Color contact carrier	black
PIN 1	0 V
Family construction form	Terminal
No. of poles	1
Gender	Female
Color contact carrier	green
Connection type	Spring clamp terminals FK
PIN 1	24 V DC
Family construction form	Terminal
No. of poles	1
Gender	Female
Color contact carrier	green
Connection type	Spring clamp terminals FK
PIN 1	0 V
Family construction form	Terminal
No. of poles	2
Gender	Female
Color contact carrier	green
Connection type	Spring clamp terminals FK
PIN 1	On
PIN 2	14
Family construction form	Terminal
No. of poles	4
Gender	Female
Color contact carrier	green
Connection type	Spring clamp terminals FK
PIN 1	Out 1
PIN 2	Out 2
PIN 3	Out 3
PIN 4	Out 4
Family construction form	Terminal
No. of poles	4
Gender	Female
Color contact carrier	green
Connection type	Spring clamp terminals FK
PIN 1	Out 5
PIN 2	Out 6
PIN 3	Out 7
PIN 4	Out 8

The information in this Product-PDF has been compiled with the utmost care.
Liability for the correctness completeness and topicality of the information is restricted to gross negligence. Version: 2026-11-24