PRODUCT NUMBER: 878-22-006-00-011101

www.mill-max.com
DATA SHEET

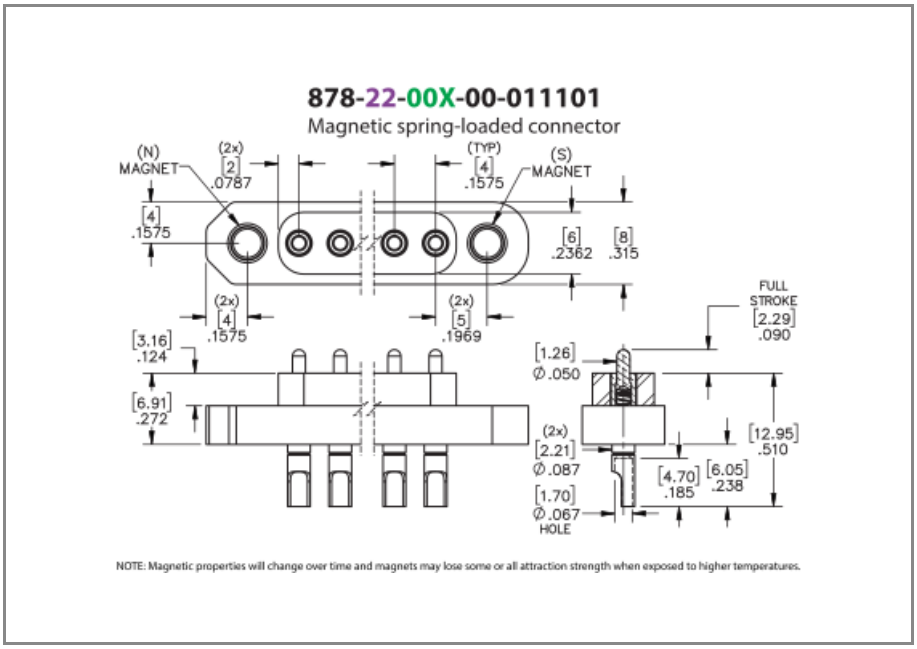



General Info	
1 **Description:**	Wire Termination Spring-Loaded Header Magnetic Vertical Mount Soldercup
Plunger Type:	Round
Type:	Spring-Loaded
2 **Category:**	Maxnetic® Pogo Pin Header Strip
Mounting Style:	Mounting Tabs with Magnetic Inserts
Tail Type:	Soldercup Tail
# Pins:	6
3 **Packaging:**	Packaged in Box or Tube
Qty Tube:	13
Rows:	Single Row
Head Type:	Plunger
ECCN:	Contact Factory
HTSUS:	8536.90.4040
Product Lifecycle:	Active
Country Of Origin:	USA

878-22-006-00-011101- SPECIFICATIONS

Environmental Specs		
	Temperature Range:	-55/+80° C
4	**Shock:**	No Elect. Discontinuity > 1µs @ 50g
5	**Vibration:**	No Elect. Discontinuity > 1µs @ 10-2000HZ, 15 G
6	**RoHS:**	Yes
	Moisture Sensitivity Level (MSL):	1 (Unlimited)
	REACH Status:	REACH Unaffected
Mechanical Specs		
	Mechanical life (Durability):	100,000 to 1,000,000 Cycles @ Mid-Stroke
Materials		
	Loose Pin/Receptacle #(Material):	0868 (Brass Alloy)
	Shell Plating:	20µ" Gold over Nickel
	Inner Spring #:	62
	Inner Spring Material:	Stainless Steel
	Inner Spring Plating:	(Spring) 10µ" Gold
	Insulator Material:	Nylon 4/6
Technical Specs		
	Stroke:	.090" (2,286mm)
	Pitch:	.158" (4,001mm)
Electrical Specs		
7	**Contact Resistance:**	25 mΩ max.
	Rated Voltage:	100 VRMS/150 VDC
	Insulation Resistance:	10,000 MΩ min.
	Dielectric Withstanding Voltage:	1,000 VRMS min.

NOTES:

1. **Standard Tolerances**
   Assembly tolerance: +/-.010" (.25mm)
   Connector Length "L"

Connector Length "L"	Tolerance
L ≤ 2" (L ≤ 50.8 mm)	+/- .005" (+/- .127 mm)
2< L ≤ 3" (50.8 < L ≤ 76.2 mm)	+ .007/ - .006" (+ .178/ -.152 mm)
3< L ≤ 4" (76.2 < L ≤ 101.6 mm)	+ .009 / - .007" (+ .229 / - .178 mm)
4< L ≤ 5" (101.6 < L ≤ 127 mm)	+ .011 / - .008" (+ .279 / - .203 mm)
5< L ≤ 6.4" (127 < L ≤ 162.56 mm)	+ .013 / - .009" (+ .330 / - .229 mm)

   Insulator width: +/-.005 (.13mm)
   Insulator height: +/-.005 (.13mm)
   Co-planarity of SMT connectors: .005" (.13mm) up to 1" (25.4mm) in connector length
   Insulator Flatness: .005" (.13mm) up to 1" (25.4mm) in connector length
   Pin Length: +/-.006 (.15mm)
   Pin Diameter: +/-.002 (.051mm)
   Pin Angle: +/-2°
2. Magnetic force can change over time due to heat exposure.
3. Not all part numbers in the series may be packaged in tubes. Some specific part numbers may be packaged in a box.
4. For discrete pin only. Per IEC 60512-6-3: Test 6c: Shock
5. For discrete pin only. Per IEC 60512-6-4: Test 6d: Vibration (sinusoidal)
6. Mill-Max products labeled with the RoHS symbol are compliant with all three ROHS Directives. All of our products previously described as RoHS (2002/95/EC) and RoHS-2 (2011/65/EC) are also compliant with RoHS-3 (2015/863/EU).
7. For discrete pin only. Per EIA-364-23C, Low Level Contact Resistance

ADDITIONAL NOTES AND SPECIFICATIONS

In the interest of improved design, quality and performance , Mill-Max reserves the right to make changes in its specifications without prior notice. Specifications and tolerances are provided wherever possible. The tolerance on dimensions of critical to function features is typically held tighter than the stated standard tolerances, such as press-fits, holes and lengths affecting the coplanarity of SMT products. Due to the wide variety of interconnects Mill-Max offers, the specific tolerances vary from product to product. If you need information regarding the tolerance of a particular part, please contact Technical Services.

RELATED LINKS AND DOCUMENTS

- Product Detail: 878-22-006-00-011101 - Wire Termination Spring-Loaded Header
- Engineering Notebook: **Introduction to Spring-Loaded Pogo Pins & Connectors**
- Environmental Compliance: https://www.mill-max.com/rohs