VERTICAL PC BOARD GUIDES

Vertical board guides provide for a quick and easy assembly of circuit boards. Sturdy design assures boards stay square. These guards can be mounted to chassis or directly to a mother board. Mounting holes have brass threaded inserts to assure secure mounting of guide. After bracket is installed, boards are quickly locked into place or released for repair or upgrades. Locking pins at the top of the bracket can be set/released using finger pressure, no tools are required.

- Brass threaded inserts assure sturdy connection to chassis or mother board
- Available for circuit boards 1.970" to 6.300" tall
- Locking pin keeps circuit board locked into place
- M3 mounting screws available
- Supplied with hardware: 2 screws, 2 washers and 2 lock washers
- All brackets use same footprint, no redesign of mounting holes required if changing bracket height

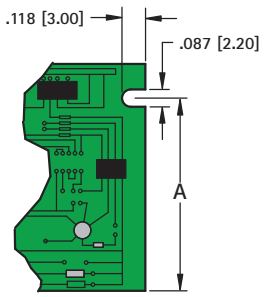

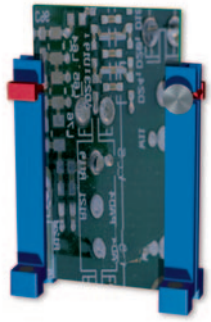

STANDARD

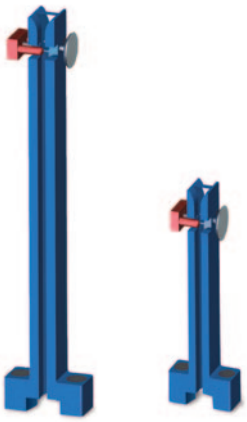

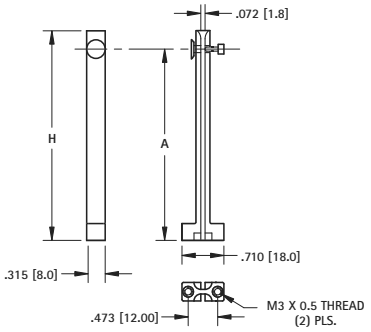

CAT. NO.	H HEIGHT	A LOCK PIN HEIGHT
8645	1.970 (50.0)	1.650 (42.0)
8646	2.560 (65.0)	2.250 (56.5)
8647	3.540 (90.0)	3.200 (81.5)
8648	4.725 (120.0)	4.430 (112.5)

MATERIAL:
Guide: Nylon 6/6
Threaded Insert: Brass, Nickel Plate

REINFORCED

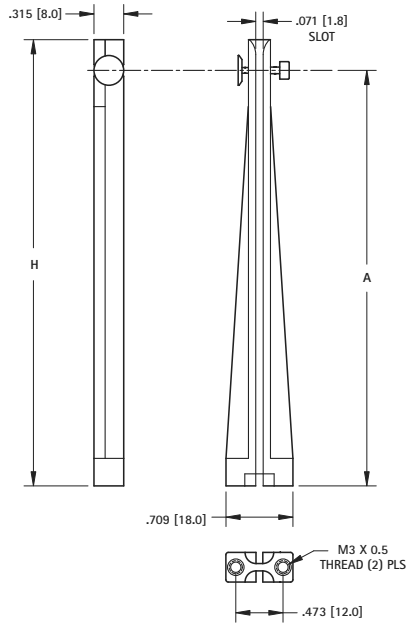

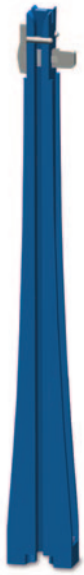

MATERIAL:
Guide: Nylon 6/6, Glass Filled
Threaded Insert: Brass, Nickel Plate

CAT. NO.	H HEIGHT	A LOCK PIN HEIGHT
8654	4.724 (120.0)	4.410 (112.0)

HORIZONTAL TYPE PC BOARD GUIDES



MATERIAL:
Natural Nylon 6/6, UL Rated 94V-2

Guides may be used horizontally or vertically and snap into .125 (3.2) diameter holes. Narrow width allows maximum density and optimum airflow. Simple press-fit, secure installation. No special tools required to install.

- Sturdy Nylon construction
- Mounts into chassis with out tools
- Assures proper alignment of board
- Quick and easy installation of board

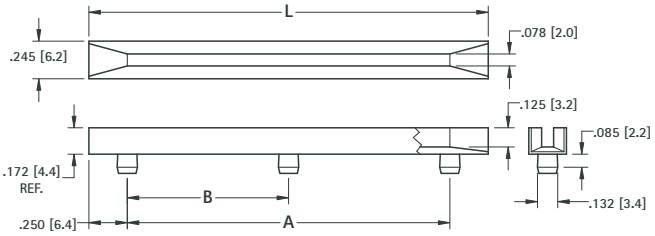

Mounting Detail

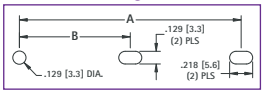

CAT. NO.	L	A	B
8620	2.5 (63.5)	2.0 (50.8)	–
8621	3.0 (76.2)	2.5 (63.5)	–
8622	3.5 (88.9)	3.0 (76.2)	–
8623	4.0 (101.6)	3.5 (88.9)	–
8624	4.5 (114.3)	4.0 (101.6)	–
8625	5.0 (127.0)	4.5 (114.3)	–
8626	5.5 (139.7)	5.0 (127.0)	–
8627	6.0 (152.4)	5.5 (139.7)	–
8628	6.5 (165.1)	6.0 (152.4)	–
8629	7.0 (177.8)	6.5 (165.1)	–
8630	7.0 (177.8)	6.5 (165.1)	3.25 (82.6)
8631	7.5 (190.5)	7.0 (177.8)	–
8632	7.5 (190.5)	7.0 (177.8)	3.50 (88.9)
8633	8.0 (203.2)	7.5 (190.5)	–
8634	8.0 (203.2)	7.5 (190.5)	3.75 (95.3)
8635	8.5 (215.9)	8.0 (203.2)	–
8636	8.5 (215.9)	8.0 (203.2)	4.00 (101.6)

Tel (516) 328-7500 • Fax (516) 328-1080
(800) 221-5510 • kec@keyelco.com
KEYSTONE®
RoHS COMPLIANT ~ ISO 9001 CERTIFIED
www.keyelco.com
55 S. Denton Avenue, New Hyde Park, NY 11040