CRGH1206F499R ✔ ACTIVE

Neohm | Neohm CRGH

TE Internal #: 6-1879514-5

Power Resistor, Thick Film, 1206, .5 W, 499 Ω, 1 %, ±100 ppm/°C, Solder, 2 Termination, Height .022 in [.55 mm], Length .122 in [3.1 mm], Neohm CRGH

View on TE.com >

Passive Components > Resistors > Surface Mount Resistors



Resistor Type: **Power Resistor**

Element Type: **Thick Film**

Package Size Code: **1206**

Power Rating: **.5 W**

Resistance Value: **499 Ω**

Features

Product Type Features

Resistor Type	Power Resistor
Element Type	Thick Film
Package Size Code	1206

Configuration Features

Number of Resistors	1

Electrical Characteristics

Operating Voltage	200 V
Power Rating	.5 W
Resistance Value	499 Ω
Resistance Class	Up to 1kΩ
Passive Component Tolerance	1 %

Termination Features

Surface Mount Resistor Termination Type	Solder
Number of Terminations	2

Dimensions

Product Height	.55 mm[.022 in]
Product Length	3.1 mm[.122 in]
Product Width	1.55 mm[.061 in]

Usage Conditions

Temperature Coefficient	±100 ppm/°C

Packaging Features

Packaging Method	Taped & Reeled

Product Compliance

For compliance documentation, visit the product page on TE.com>

EU RoHS Directive 2011/65/EU	Compliant with Exemptions
EU ELV Directive 2000/53/EC	Compliant with Exemptions
China RoHS 2 Directive MIIT Order No 32, 2016	Restricted Materials Above Threshold
EU REACH Regulation (EC) No. 1907/2006	Current ECHA Candidate List: JAN 2024 (240) Candidate List Declared Against: JAN 2024 (240) Does not contain REACH SVHC
Halogen Content	Low Halogen - Br, Cl, F, I < 900 ppm per homogenous material. Also BFR/CFR/PVC Free
Solder Process Capability	Reflow solder capable to 260°C

Product Compliance Disclaimer

This information is provided based on reasonable inquiry of our suppliers and represents our current actual knowledge based on the information they provided. This information is subject to change. The part numbers that TE has identified as EU RoHS compliant have a maximum concentration of 0.1% by weight in homogenous materials for lead, hexavalent chromium, mercury, PBB, PBDE, DBP, BBP, DEHP, DIBP, and 0.01% for cadmium, or qualify for an exemption to these limits as defined in the Annexes of Directive 2011/65/EU (RoHS2). Finished electrical and electronic equipment products will be CE marked as required by Directive 2011/65/EU. Components may not be CE marked. Additionally, the part numbers that TE has identified as EU ELV compliant have a maximum concentration of 0.1% by weight in homogenous materials for lead, hexavalent chromium, and mercury, and 0.01% for cadmium, or qualify for an exemption to these limits as defined in the Annexes of Directive 2000/53/EC (ELV). Regarding the REACH Regulation, the information TE provides on SVHC in articles for this part number is based on the latest European Chemicals Agency (ECHA) 'Guidance on requirements for substances in articles' posted at this URL: https://echa.europa.eu/guidance-documents/guidance-on-reach

Compatible Parts



TE Part # 9-1879510-1
CRGH0805 1% 10K 0.33W



TE Part # 1-1879502-0
CRGH2512 5% 33K 2W



TE Part # 1879513-1
CRGH1206 1% 10R 0.5W



TE Part # 6-1879501-0
CRGH2512 5% 300R 2W



TE Part # 3-1879523-9
CRGH2512 1% 24R9 2W

Also in the Series | Neohm CRGH

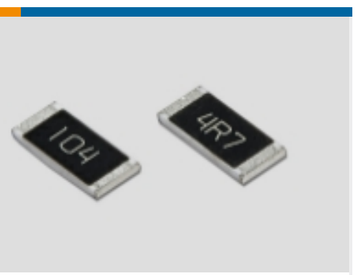

Surface Mount Resistors(3656)

Customers Also Bought



TE Part # DT04-2P
REC, 2P, GRY, N



TE Part # DT06-2S
PLG, 2P, GRY, N



TE Part # W2S
Wedgelocks: DEUTSCH DT



TE Part # 0460-202-16141
DEUTSCH Solid Contacts



TE Part # 282104-1
AMP SUPERSEAL 1.5MM, CONNECTOR HOUSING

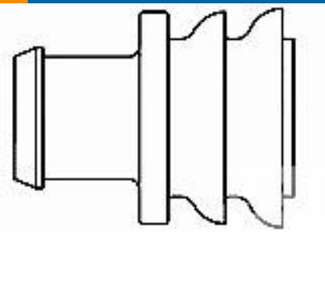

TE Part # 281934-2
SINGLE WIRE SEAL



TE Part # 114017-ZZ
SEALING PLUG, SIZE 12/16, WHT

Documents

CAD Files

3D PDF

3D

Customer View Model

ENG_CVM_CVM_6-1879514-5_BA.2d_dxf.zip

English

Customer View Model

ENG_CVM_CVM_6-1879514-5_BA.3d_igs.zip

English

Customer View Model

ENG_CVM_CVM_6-1879514-5_BA.3d_stp.zip

English

By downloading the CAD file I accept and agree to the Terms and Conditionsof use.

Datasheets & Catalog Pages

1309350_PASSIVE_COMPONENT

English