RN73C2A6K81BTD ✔ ACTIVE

Holsworthy | Holsworthy RN73

TE Internal #: 1676418-3

Precision Resistor, Thin Film, 0805, .1 W, 6.81K Ω, .1 %, ±10 ppm/°C, Solder, 2 Termination, Height .022 in [.55 mm], Holsworthy RN73

View on TE.com >

Passive Components > Resistors > Surface Mount Resistors



Resistor Type: **Precision Resistor**

Element Type: **Thin Film**

Package Size Code: **0805**

Power Rating: **.1 W**

Resistance Value: **6.81K Ω**

Features

Product Type Features

Resistor Type	Precision Resistor
Element Type	Thin Film
Package Size Code	0805

Configuration Features

Number of Resistors	1

Electrical Characteristics

Operating Voltage	100 V
Power Rating	.1 W
Resistance Value	6.81K Ω
Resistance Class	1kΩ - 1MΩ
Passive Component Tolerance	.1 %

Termination Features

Surface Mount Resistor Termination Type	Solder
Number of Terminations	2

Dimensions

Product Height	.55 mm[.022 in]
Product Length	2 mm[.079 in]
Product Width	1.25 mm[.049 in]

Usage Conditions

Temperature Coefficient	±10 ppm/°C

Packaging Features

Packaging Method	Taped & Reeled

Product Compliance

For compliance documentation, visit the product page on TE.com>

EU RoHS Directive 2011/65/EU	Compliant
EU ELV Directive 2000/53/EC	Compliant
China RoHS 2 Directive MIIT Order No 32, 2016	No Restricted Materials Above Threshold
EU REACH Regulation (EC) No. 1907/2006	Current ECHA Candidate List: JAN 2024 (240) Candidate List Declared Against: JAN 2024 (240) Does not contain REACH SVHC
Halogen Content	Low Halogen - Br, Cl, F, I < 900 ppm per homogenous material. Also BFR/CFR/PVC Free
Solder Process Capability	Reflow solder capable to 260°C

Product Compliance Disclaimer

This information is provided based on reasonable inquiry of our suppliers and represents our current actual knowledge based on the information they provided. This information is subject to change. The part numbers that TE has identified as EU RoHS compliant have a maximum concentration of 0.1% by weight in homogenous materials for lead, hexavalent chromium, mercury, PBB, PBDE, DBP, BBP, DEHP, DIBP, and 0.01% for cadmium, or qualify for an exemption to these limits as defined in the Annexes of Directive 2011/65/EU (RoHS2). Finished electrical and electronic equipment products will be CE marked as required by Directive 2011/65/EU. Components may not be CE marked. Additionally, the part numbers that TE has identified as EU ELV compliant have a maximum concentration of 0.1% by weight in homogenous materials for lead, hexavalent chromium, and mercury, and 0.01% for cadmium, or qualify for an exemption to these limits as defined in the Annexes of Directive 2000/53/EC (ELV). Regarding the REACH Regulation, the information TE provides on SVHC in articles for this part number is based on the latest European Chemicals Agency (ECHA) 'Guidance on requirements for substances in articles' posted at this URL: https://echa.europa.eu/guidance-documents/guidance-on-reach

Compatible Parts



TE Part # 1676153-2
RN 0805 10K 0.1% 10PPM 1KRL



TE Part # 1614349-9
RN 0603 10K 0.1% 10PPM CUT LENGTH



TE Part # 1676153-3
RN 0805 10K 0.1% 10PPM 5KRL

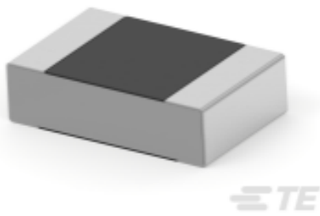

TE Part # 1-1676142-3
RN 0805 100K 0.01% 10PPM 5K RL

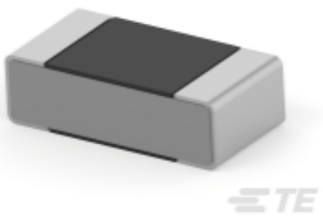

TE Part # 8-1879130-4
RN 0402 5K11 0.1% 10PPM 5K RL

Also in the Series | Holsworthy RN73



Surface Mount Resistors(3788)

Customers Also Bought

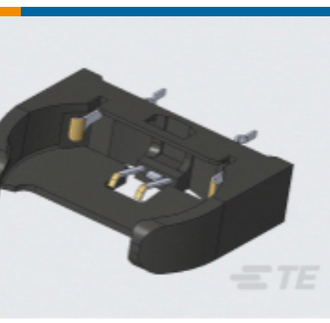

TE Part # 1775485-3
BATTERY HOLDER, 3.6MM, HIGH STANDOFF

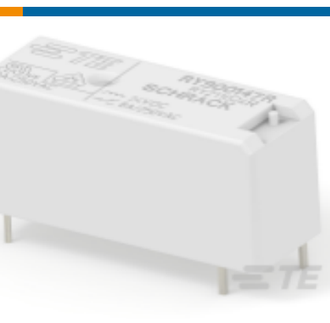

TE Part # 2-1956164-7
RY900147R (RY211024R)



TE Part # 1-1879246-5
RN 0603 4K32 0.1% 5PPM 1K RL



TE Part # 5-1676731-9
RN 0805 2K21 0.1% 5PPM 1K RL

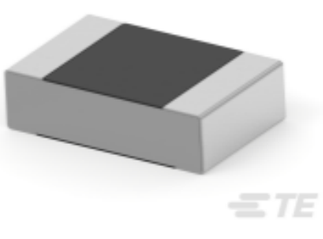

TE Part # 4-1676731-9
RN 0805 7K5 0.1% 5PPM 1K RL



TE Part # 1422015-9
V23026D1025B201 *X020

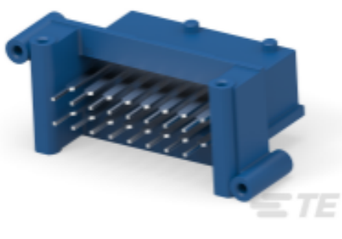

TE Part # 3-1452721-1
3MM TAB HEADER ASSY



TE Part # 2-1415546-9
RM627012

Documents

CAD Files

3D PDF

3D

Customer View Model

ENG_CVM_CVM_1676418-3_BC.2d_dxf.zip

English

Customer View Model

ENG_CVM_CVM_1676418-3_BC.3d_igs.zip

English

Customer View Model

ENG_CVM_CVM_1676418-3_BC.3d_stp.zip

English

By downloading the CAD file I accept and agree to the Terms and Conditionsof use.

Datasheets & Catalog Pages

1309350_PASSIVE_COMPONENT

English

High Precision Resistors (SMD) - Type RN73 Series - Tyco Electronics Passives

English

8-1773459-4_POWER_FILTERING_AND_RESISTIVE_SOLUTIONS_FOR_ELEVATORS_AND_ESCALATORS

English