PART NUMBER	ITEM ① BODY	ITEM ② CONTACT	ITEM ③ INSULATOR	ITEM ④ INSULATOR	PACKAGING
142-0711-301	BRASS GOLD PL .00001 MIN OVER NICKEL PL .DDDD5 MIN OVER COPPER PL .00005 MIN	BERYLLIUM COPPER GOLD PL .00003 MIN OVER NICKEL PL .DDDD5 MIN OVER COPPER PL .00005 MIN	TEFLON	TEFLON	BULK PACK 25 PCS.
142-0711-302	BRASS GOLD PL .00001 MIN OVER NICKEL PL .DDDD5 MIN OVER COPPER PL .00005 MIN	BERYLLIUM COPPER GOLD PL .00003 MIN OVER NICKEL PL .DDDD5 MIN OVER COPPER PL .00005 MIN	TEFLON	TEFLON	TAPE AND REEL 425 PCS. PER FIG 1
142-0711-305 ⚠2	BRASS NICKEL PL .DDD1 MIN OVER COPPER PL .00005 MIN	BERYLLIUM COPPER GOLD PL .00003 MIN OVER NICKEL PL .DDDD5 MIN OVER COPPER PL .00005 MIN	TEFLON	TEFLON	BULK PACK 25 PCS.
142-0711-306 ⚠2	BRASS NICKEL PL .DDD1 MIN OVER COPPER PL .00005 MIN	BERYLLIUM COPPER GOLD PL .00003 MIN OVER NICKEL PL .DDDD5 MIN OVER COPPER PL .00005 MIN	TEFLON	TEFLON	TAPE AND REEL 425 PCS. PER FIG 1

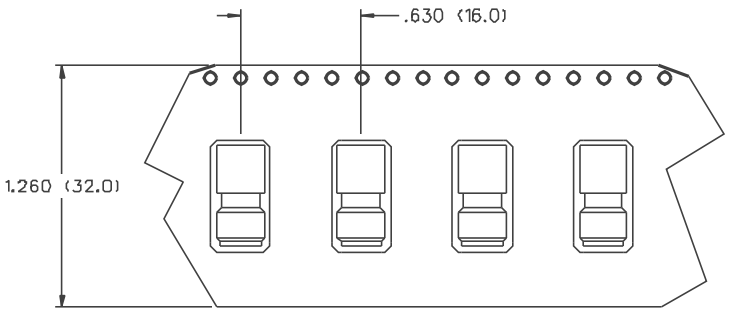

FIG 1
2:1

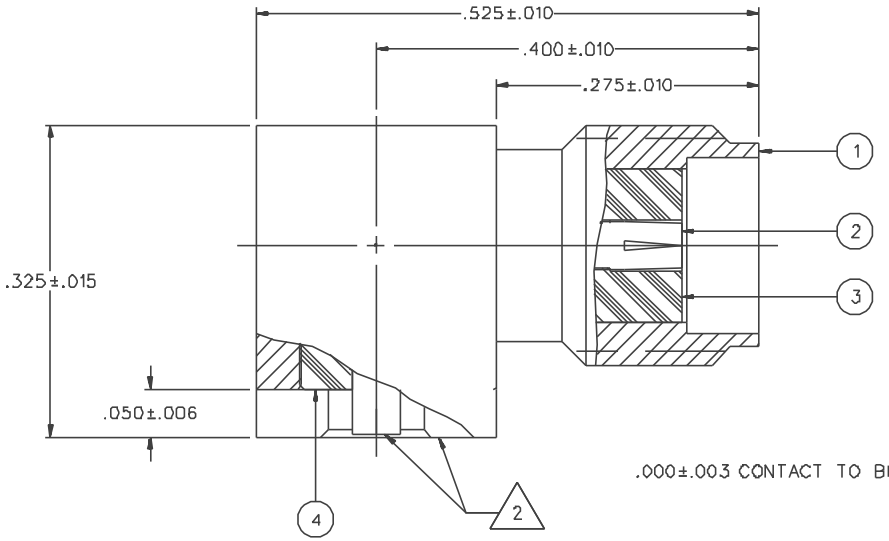

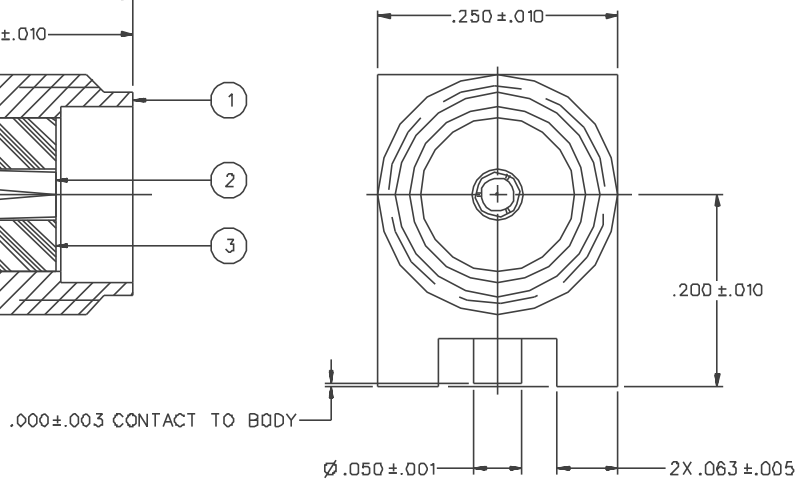

NOTES:

1. SPECIFICATIONS:

IMPEDANCE: 50 OHMS
FREQUENCY RANGE: 0-18 GHz
VSWR: NOT APPLICABLE
WORKING VOLTAGE: 335 VRMS MAX AT SEA LEVEL
DIELECTRIC WITHSTANDING VOLTAGE: 1000 VRMS MIN AT SEA LEVEL
INSULATION RESISTANCE: 5000 MEGOHM MIN
CONTACT RESISTANCE:
CENTER CONTACT - INITIAL 3 MILLIOHM MAX, AFTER ENVIRONMENTAL 4 MILLIOHM MAX
OUTER CONDUCTOR - INITIAL 2 MILLIOHM MAX, AFTER ENVIRONMENTAL NOT APPLICABLE
BRAID TO BODY - NOT APPLICABLE
CORONA LEVEL: 250 VOLTS MIN AT 70,000 FEET
INSERTION LOSS: NOT APPLICABLE
RF LEAKAGE: NOT APPLICABLE
RF HIGH POTENTIAL WITHSTANDING VOLTAGE: 670 VRMS AT 4 AND 7 MHZ

MECHANICAL:

ENGAGE/DISENGAGE TORQUE: 2 INCH-POUNDS MAX
MATING TORQUE: 7-10 INCH POUNDS MAX
COUPLING PROOF TORQUE: 10 INCH POUNDS MAX
COUPLING NUT RETENTION: NOT APPLICABLE
CONTACT RETENTION: 6 LBS MIN AXIAL FORCE
CABLE ACCEPTABILITY: NOT APPLICABLE
CABLE HEX CRIMP SIZE: NOT APPLICABLE
CABLE RETENTION: NOT APPLICABLE
DURABILITY: 500 CYCLES MIN

ENVIRONMENTAL:

(MEETS OR EXCEEDS THE APPLICABLE PARAGRAPH OF MIL-C-39012)
THERMAL SHOCK: MIL-STD-202, METHOD 107, CONDITION B
OPERATING TEMPERATURE: -65 DEG C TO 165 DEG C
CORROSION: MIL-STD-202, METHOD 101, CONDITION B
SHOCK: MIL-STD-202, METHOD 213, CONDITION I
VIBRATION: MIL-STD-202, METHOD 204, CONDITION D

⚠2 CONNECTOR MOUNTING RAILS 60%/40% TIN/LEAD COATED (SOLDER PLATED)

RECOMMENDED LAND PATTERN*

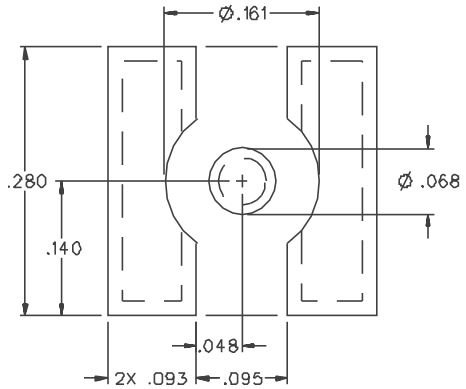

* NOTE: THIS PATTERN IS FOR REFERENCE ONLY. PATTERN MAY VARY DEPENDING ON ASSEMBLY PROCESS OR SPECIFIC ELECTRICAL OR MECHANICAL REQUIREMENTS.

NOTE:
APPLY A MAXIMUM OF 10 POUND INCH TORQUE TO MATING CONNECTOR COUPLING NUT OR FIXTURE BODY OF THIS CONNECTOR WITH A WRENCH WHILE TIGHTENING.

DRAWING NO.
C - 142-0711-301/310

0	REVISIONS		
ENGINEERING RELEASE			
1	7-20-93	R H	7-30-93 ECO 41835
DELETED: MOISTURE SEAL SPEC			
* REVISION NUMBER FOLLOWED BY AN ALPHA * CHARACTER INDICATES DRAWING CLARIFI- * CATION OR PART NUMBER ADDITION ONLY. *			
1a	7-20-93	R H	ECN 45356
ADDED P/N'S: -302, -306, ADDED TAPE AND REEL PACKAGING .000+-.003 WAS .003+-.006			
2	5-1-01	A K	ECO 47906

CUSTOMER DRAWING

THIS DRAWING TO BE INTERPRETED PER ANSI Y 14.5M - 1982

"μSTATION"

COMPANY CONFIDENTIAL

TOLERANCE UNLESS OTHERWISE SPECIFIED DECIMALS .XX ——— mm .XXX+-.003 ——— MATL ——— FINISH ———	DRAWN BY VET	DATE 3-1-93	JOHNSON Cinch Connectivity Solutions 299 Johnson Ave, Ste. 100 Waseca, MN 56093 1-800-247-8256
	CHECKED BY	DATE	TITLE: JACK ASSEMBLY, RA SURFACE MOUNT SMA
	APPROVED BY TAK	DATE 7-22-93	
	APPROVED BY RJB	DATE 7-23-93	CODE NO. — DRAWING NO. C - 142-0711-301/310
	RELEASE DATE 7-30-93		SCALE 10:1 — U/M INCH(MM) — SHEET 2 OF 2

Please read our datasheet & drawing disclaimer here.